IEC 60076-22-5

Edition 1.0 2021-01

INTERNATIONAL STANDARD

NORME INTERNATIONALE

Power transformers –
Part 22-5: Power transformer and reactor fittings – Electric pumps for transformers

Transformateurs de puissance –
Partie 22-5: Accessoires pour transformateurs de puissance et bobines d'inductance – Électropompes pour transformateurs

IEC 60076-22-5:2021-01(en-fr)

Documents
Document Sharing Hub

Full document details: IEC 60076-22-5-2021

THIS PUBLICATION IS COPYRIGHT PROTECTED
Copyright © 2021 IEC, Geneva, Switzerland

All rights reserved. Unless otherwise specified, no part of this publication may be reproduced or utilized in any form or by any means, electronic or mechanical, including photocopying and microfilm, without permission in writing from either IEC or IEC's member National Committee in the country of the requester. If you have any questions about IEC copyright or have an enquiry about obtaining additional rights to this publication, please contact the address below or your local IEC member National Committee for further information.

Droits de reproduction réservés. Sauf indication contraire, aucune partie de cette publication ne peut être reproduite ni utilisée sous quelque forme que ce soit et par aucun procédé, électronique ou mécanique, y compris la photocopie et les microfilms, sans l'accord écrit de l'IEC ou du Comité national de l'IEC du pays du demandeur. Si vous avez des questions sur le copyright de l'IEC ou si vous désirez obtenir des droits supplémentaires sur cette publication, utilisez les coordonnées ci-après ou contactez le Comité national de l'IEC de votre pays de résidence.

IEC Central Office
3, rue de Varembé
CH-1211 Geneva 20
Switzerland

Tel.: +41 22 919 02 11
info@iec.ch
www.iec.ch

About the IEC
The International Electrotechnical Commission (IEC) is the leading global organization that prepares and publishes International Standards for all electrical, electronic and related technologies.

About IEC publications
The technical content of IEC publications is kept under constant review by the IEC. Please make sure that you have the latest edition, a corrigendum or an amendment might have been published.

IEC publications search - webstore.iec.ch/advsearchform
The advanced search enables to find IEC publications by a variety of criteria (reference number, text, technical committee, …). It also gives information on projects, replaced and withdrawn publications.

IEC Just Published - webstore.iec.ch/justpublished
Stay up to date on all new IEC publications. Just Published details all new publications released. Available online and once a month by email.

IEC Customer Service Centre - webstore.iec.ch/csc
If you wish to give us your feedback on this publication or need further assistance, please contact the Customer Service Centre: sales@iec.ch.

IEC online collection - oc.iec.ch
Discover our powerful search engine and read freely all the publications previews. With a subscription you will always have access to up to date content tailored to your needs.

Electropedia - www.electropedia.org
The world's leading online dictionary on electrotechnology, containing more than 22 000 terminological entries in English and French, with equivalent terms in 18 additional languages. Also known as the International Electrotechnical Vocabulary (IEV) online.

A propos de l'IEC
La Commission Electrotechnique Internationale (IEC) est la première organisation mondiale qui élabore et publie des Normes internationales pour tout ce qui a trait à l'électricité, à l'électronique et aux technologies apparentées.

A propos des publications IEC
Le contenu technique des publications IEC est constamment revu. Veuillez vous assurer que vous possédez l'édition la plus récente, un corrigendum ou amendement peut avoir été publié.

Recherche de publications IEC - webstore.iec.ch/advsearchform
La recherche avancée permet de trouver des publications IEC en utilisant différents critères (numéro de référence, texte, comité d'études, …). Elle donne aussi des informations sur les projets et les publications remplacées ou retirées.

IEC Just Published - webstore.iec.ch/justpublished
Restez informé sur les nouvelles publications IEC. Just Published détaille les nouvelles publications parues. Disponible en ligne et une fois par mois par email.

Service Clients - webstore.iec.ch/csc
Si vous désirez nous donner des commentaires sur cette publication ou si vous avez des questions contactez-nous: sales@iec.ch.

IEC online collection - oc.iec.ch
Découvrez notre puissant moteur de recherche et consultez gratuitement tous les aperçus des publications. Avec un abonnement, vous aurez toujours accès à un contenu à jour adapté à vos besoins.

Electropedia - www.electropedia.org
Le premier dictionnaire d'électrotechnologie en ligne au monde, avec plus de 22 000 articles terminologiques en anglais et en français, ainsi que les termes équivalents dans 16 langues additionnelles. Egalement appelé Vocabulaire Electrotechnique International (IEV) en ligne.

AVA Documents
Document Sharing Hub

Full document details: IEC 60076-22-5-2021

IEC 60076-22-5

Edition 1.0 2021-01

INTERNATIONAL STANDARD

NORME INTERNATIONALE

Power transformers –
Part 22-5: Power transformer and reactor fittings – Electric pumps for transformers

Transformateurs de puissance –
Partie 22-5: Accessoires pour transformateurs de puissance et bobines d'inductance – Électropompes pour transformateurs

INTERNATIONAL
ELECTROTECHNICAL
COMMISSION

COMMISSION
ELECTROTECHNIQUE
INTERNATIONALE

ICS 29.180

ISBN 978-2-8322-9249-5

Warning! Make sure that you obtained this publication from an authorized distributor.
Attention! Veuillez vous assurer que vous avez obtenu cette publication via un distributeur agréé.

® Registered trademark of the International Electrotechnical Commission
Marque déposée de la Commission Electrotechnique Internationale

Documents
Document Sharing Hub

Full document details: IEC 60076-22-5-2021

CONTENTS

FOREWORD 4
1 Scope 6
2 Normative references 6
3 Terms and definitions 7
4 Service conditions 7
4.1 General 7
4.2 Degree of protection of electrical components (IP) 8
4.3 External corrosion protection 8
4.4 Internal corrosion protection 8
4.5 Insulating liquid characteristics 8
5 General characteristics and requirements 8
5.1 Rating plate information 8
5.2 Direction of liquid flow and rotation 9
5.3 General mechanical requirements 9
5.4 Casing or enclosure 9
5.5 Terminal box 10
5.6 Materials 10
5.7 Preferred sizes 10
5.8 Performance requirements 10
5.8.1 General 10
5.8.2 Hydraulic performance 11
5.8.3 Hydraulic interchangeability 11
5.8.4 Electrical performance 12
5.8.5 Noise 13
5.9 Tests 13
5.9.1 General 13
5.9.2 List of tests 13
5.9.3 Routine tests 13
5.9.4 Type tests 14
5.9.5 Special tests 15
Annex A (informative) Preferred sizes of end suction pumps 16
Annex B (informative) Preferred sizes of in-line pumps 18
Annex C (informative) Information required with enquiry, proposal and purchase order 19
Annex D (informative) Example of use of hydraulic interchangeability tolerances 20
Bibliography 24

Figure 1 – Hydraulic interchangeability across the allowable operating range 11
Figure 2 – Hydraulic interchangeability across an actual flow range 12
Figure A.1 – Dimensions of end suction pumps 16
Figure B.1 – Dimensions of in-line pumps 18
Figure D.1 – Pressure-flow characteristics 20
Figure D.2 – Tolerances as given in 5.8.3 applied to pump A 21
Figure D.3 – Pressure-flow characteristic of pump B superimposed on the characteristic of pump A 22

Documents
Document Sharing Hub
Full document details: IEC 60076-22-5-2021

Figure D.4 – Pressure-flow characteristic of pumps C and D superimposed on the characteristic of pump A 22
Figure D.5 – Flow ranges 23

Table A.1 – Dimensions of preferred sizes of end suction pumps (mm) 17
Table B.1 – Dimensions of preferred sizes of in-line pumps (mm) 18

Documents
Document Sharing Hub

Full document details: IEC 60076-22-5-2021

INTERNATIONAL ELECTROTECHNICAL COMMISSION

POWER TRANSFORMERS –

Part 22-5: Power transformer and reactor fittings – Electric pumps for transformers

FOREWORD

1) The International Electrotechnical Commission (IEC) is a worldwide organization for standardization comprising all national electrotechnical committees (IEC National Committees). The object of IEC is to promote international co-operation on all questions concerning standardization in the electrical and electronic fields. To this end and in addition to other activities, IEC publishes International Standards, Technical Specifications, Technical Reports, Publicly Available Specifications (PAS) and Guides (hereafter referred to as "IEC Publication(s)"). Their preparation is entrusted to technical committees; any IEC National Committee interested in the subject dealt with may participate in this preparatory work. International, governmental and non-governmental organizations liaising with the IEC also participate in this preparation. IEC collaborates closely with the International Organization for Standardization (ISO) in accordance with conditions determined by agreement between the two organizations.
2) The formal decisions or agreements of IEC on technical matters express, as nearly as possible, an international consensus of opinion on the relevant subjects since each technical committee has representation from all interested IEC National Committees.
3) IEC Publications have the form of recommendations for international use and are accepted by IEC National Committees in that sense. While all reasonable efforts are made to ensure that the technical content of IEC Publications is accurate, IEC cannot be held responsible for the way in which they are used or for any misinterpretation by any end user.
4) In order to promote international uniformity, IEC National Committees undertake to apply IEC Publications transparently to the maximum extent possible in their national and regional publications. Any divergence between any IEC Publication and the corresponding national or regional publication shall be clearly indicated in the latter.
5) IEC itself does not provide any attestation of conformity. Independent certification bodies provide conformity assessment services and, in some areas, access to IEC marks of conformity. IEC is not responsible for any services carried out by independent certification bodies.
6) All users should ensure that they have the latest edition of this publication.
7) No liability shall attach to IEC or its directors, employees, servants or agents including individual experts and members of its technical committees and IEC National Committees for any personal injury, property damage or other damage of any nature whatsoever, whether direct or indirect, or for costs (including legal fees) and expenses arising out of the publication, use of, or reliance upon, this IEC Publication or any other IEC Publications.
8) Attention is drawn to the Normative references cited in this publication. Use of the referenced publications is indispensable for the correct application of this publication.
9) Attention is drawn to the possibility that some of the elements of this IEC Publication may be the subject of patent rights. IEC shall not be held responsible for identifying any or all such patent rights.

IEC 60076-22-5 has been prepared by IEC technical committee 14: Power transformers. It is an International Standard.

The text of this International Standard is based on the following documents:

Draft	Report on voting
14/1021/CDV	14/1040A/RVC

Full information on the voting for its approval can be found in the report on voting indicated in the above table.

The language used for the development of this International Standard is English.

Documents
Document Sharing Hub

Full document details: IEC 60076-22-5-2021

This document was drafted in accordance with ISO/IEC Directives, Part 2, and developed in accordance with ISO/IEC Directives, Part 1 and ISO/IEC Directives, IEC Supplement, available at www.iec.ch/members_experts/refdocs. The main document types developed by IEC are described in greater detail at www.iec.ch/standardsdev/publications.

A list of all parts in the IEC IEC 60076 series, published under the general title *Power transformers*, can be found on the IEC website.

The committee has decided that the contents of this document will remain unchanged until the stability date indicated on the IEC website under "http://webstore.iec.ch" in the data related to the specific document. At this date, the document will be

- reconfirmed,
- withdrawn,
- replaced by a revised edition, or
- amended.

Documents
Document Sharing Hub

Full document details: IEC 60076-22-5-2021

POWER TRANSFORMERS –

Part 22-5: Power transformer and reactor fittings – Electric pumps for transformers

1 Scope

This part of IEC 60076 covers electric pumps used in the cooling circuits of power transformers and reactors. It applies to electric pumps mounted on liquid immersed power transformers according to IEC 60076-1 and reactors according to IEC 60076-6 with and without conservator for indoor or outdoor installation.

It outlines the operation requirements for the electrical and hydraulic performance, mechanical design, routine testing and type testing. Additionally, performance and dimensions of preferred sizes of pump sets are specified in informative annexes.

The pumps covered in this document are rotodynamic pumps driven by a squirrel cage induction motor that is immersed in the insulating liquid.

Pump sets conforming to this document can be of in-line or end suction design.

2 Normative references

The following documents are referred to in the text in such a way that some or all of their content constitutes requirements of this document. For dated references, only the edition cited applies. For undated references, the latest edition of the referenced document (including any amendments) applies.

IEC 60034-1:2017, *Rotating electrical machines – Part 1: Rating and performance*

IEC 60034-5, *Rotating electrical machines – Part 5: Degrees of protection provided by the integral design of rotating electrical machines (IP code) – Classification*

IEC 60034-9, *Rotating electrical machines – Part 9: Noise limits*

IEC 60076-1:2011, *Power transformers – Part 1: General*

IEC 60076-7, *Power transformers – Part 7: Loading guide for mineral-oil-immersed power transformers*

IEC 60085, *Electrical insulation – Thermal evaluation and designation*

IEC 60296, *Fluids for electrotechnical applications – Mineral insulating oils for electrical equipment*

IEC 60529, *Degrees of protection provided by enclosures (IP Code)*

ISO 179-1:2010, *Plastics – Determination of Charpy impact properties – Part 1: Non-instrumented impact test*

ISO 185, *Grey cast irons – Classification*

Documents
Document Sharing Hub

Full document details: IEC 60076-22-5-2021

ISO 281, *Rolling bearings – Dynamic load ratings and rating life*

ISO 3522, *Aluminium and aluminium alloys – Castings – Chemical composition and mechanical properties*

ISO 4406, *Hydraulic fluid power – Fluids – Method for coding the level of contamination by solid particles*

ISO 7005-2, *Metallic flanges – Part 2: Cast iron flanges*

ISO 9906, *Rotodynamic pumps – Hydraulic performance acceptance tests – Grades 1, 2 and 3*

ISO 12944 (all parts), *Paints and varnishes – Corrosion protection of steel structures by protective paint systems*

3 Terms and definitions

For the purposes of this document, the following terms and definitions apply.

ISO and IEC maintain terminological databases for use in standardization at the following addresses:

- IEC Electropedia: available at http://www.electropedia.org/
- ISO Online browsing platform: available at http://www.iso.org/obp

3.1
electric pump
<for transformers> component that circulates insulating liquid through the cooling system and the transformer

Note 1 to entry: Two pump designs are considered: in-line and end suction pumps.

3.2
in-line pump
pump having the suction and delivery flanges on the same axis

Note 1 to entry: They can be of the centrifugal or propeller type; the axis of the flanges generally corresponds to the axis of rotation of the pump rotor.

3.3
end suction pump
pump having the suction and delivery flanges on perpendicular axes

Note 1 to entry: They can be of the centrifugal type only; the axis of the suction flange corresponds to the axis of rotation of the pump rotor.

4 Service conditions

4.1 General

The service conditions set out in IEC 60076-1:2011, 4.2 represent the normal scope of operation of the equipment specified in this document. For any unusual service conditions which require special consideration in the design of the equipment see IEC 60076-1:2011, 5.5. Operation under such unusual service conditions shall be subject to agreement between the purchaser and supplier, as they require special consideration in the design of the equipment.

Documents
Document Sharing Hub

Full document details: IEC 60076-22-5-2021

4.2 Degree of protection of electrical components (IP)

The degree of protection of the connecting box or terminal box for outdoor installation shall be at least IP 54 according to IEC 60529, unless otherwise specified by the purchaser.

4.3 External corrosion protection

The materials used for the construction of the equipment or the surface treatment shall be resistant to the insulating liquid and suitable to withstand the environmental conditions given in 4.1. The corrosion protection shall be agreed between purchaser and manufacturer according to ISO 12944 (all parts) or other standards as agreed with the purchaser. The responsibility to specify the correct level of corrosion protection lies with the purchaser and is dependent on the environment where the transformer will be located and on the durability required. Where no level of corrosion protection is specified, the minimum shall be C4 medium.

4.4 Internal corrosion protection

It shall be ensured that pumps are clean and free of all foreign matter and contamination.

In consideration of the storage conditions and expected time between shipment and commissioning, the corrosion protection on the inner side of the pump shall be agreed between purchaser and manufacturer. If required by the purchaser, internal surfaces of cast iron shall be finished with an oil resisting protective system.

As a minimum requirement, precautions shall be taken to prevent the ingress of moisture and the development of internal corrosion by using blanking plates with gaskets.

4.5 Insulating liquid characteristics

If not otherwise specified, the insulating liquid is mineral oil according to IEC 60296 and the operating temperature shall be in accordance with IEC 60076-7.

When the insulating liquid is not mineral oil then the viscosity variation, the operating temperature and all the other operating characteristics shall be indicated by the purchaser.

5 General characteristics and requirements

5.1 Rating plate information

The rating plate shall be corrosion resistant and acid proof. It shall be visible when the pump is assembled to the transformer and carry the following data:

- name or logo of the manufacturer;
- country and manufacturing location;
- number of this document (i.e. IEC 60076-22-5);
- manufacturer’s identification
- manufacturer’s serial number;
- year of manufacturing;
- type of protection by casing (IP code) compliant with IEC 60034-5;
- Rated flow [m^3/h] at 60 °C;
- rated pressure [kPa];
- CE marking or marking in accordance with any other regulation (if applicable);
- thermal class;
- electrical connection (Y / Δ);

Documents
Document Sharing Hub

Full document details: IEC 60076-22-5-2021

- rated power or band of rated power;
- rated voltage or band of rated voltage;
- rated frequency;
- rated current or band of rated current;
- rated speed or band of rated speed;
- power factor cos φ;
- weight [kg] if over 30 kg.

The device manufacturer's identification shall allow identification of the device characteristics from the mounting, operating and maintenance manual supplied by the manufacturer.

5.2 Direction of liquid flow and rotation

The direction of liquid flow and rotational direction shall be indelibly marked on the housing or be combined with the nameplate.

5.3 General mechanical requirements

Electric pumps for insulating fluid are glandless, rotodynamic pumps driven by a squirrel cage induction motor. Therefore, motor cooling and bearing lubrication shall be by circulation of the liquid.

The lifetime of the bearings shall be according to ISO 281 at rated conditions. Where slide bearings are used, the lifetime shall be at least 200 000 h. Ball bearings shall be of standard design with a lifetime of at least 50 000 h. The expected lifetime of the pump shall not restrict the expected lifetime of the transformer under normal service conditions.

At all times, the pumps shall be kept clean and free of contamination and humidity; this is essential.

Pumps shall be suitable for mounting with the axis of the rotating unit either horizontal or vertical. If other positions are going to be used, this shall be made known to the manufacturer.

Reverse rotation of the pump shall not cause damage to the pump.

On special request from the purchaser a mechanical or electrical device can be fitted, showing the pump rotation.

The propeller pumps used to support the liquid flow for radiators' cooling performance (e.g. with rated pressure of 50 kPa or less), shall have an impeller design which minimizes the restriction of the liquid flow when the pump is idle.

5.4 Casing or enclosure

Casings or enclosures shall be capable of withstanding a maximum working pressure of 300 kPa under operating conditions without leakage.

Suction and delivery flanges shall conform to PN10 of ISO 7005-2 for end suction pumps and PN6 or PN10 for in-line pumps. The flanges shall generally be suitable to support the pump in normal operation. Where the pump design is such that additional supports are required, for example, for high power end suction pumps, this shall be made known by the manufacturer.

It is the responsibility of the transformer or cooling circuit designer to ensure that the pump is correctly supported.

Documents
Document Sharing Hub

Full document details: IEC 60076-22-5-2021

Drain and vent connections shall be provided and be suitable for the installation positions allowed.

5.5 Terminal box

The manufacturer shall specify the allowed terminal box and cable entry positions, which are preferably from below.

The connection box shall have at least one cable entry with metric thread.

An earth terminal shall be provided.

Terminals, including the earthing terminal, shall be suitable to connect 1,5 mm^2, 2,5 mm^2, 4,0 mm^2 or 6,0 mm^2 cables according to the electric power to be connected. All terminals shall be easily accessible.

A permanent label shall be provided inside the terminal box cover showing the connections required for correct rotation of the pump.

5.6 Materials

The pump casing or enclosure shall be manufactured of either cast iron according to ISO 185 grade 200 minimum or aluminium alloy according to ISO 3522 Al-Si. Other suitable materials agreed between the purchaser and manufacturer may be used.

External fasteners shall be stainless steel.

Rotating units shall be of all-metal construction to minimize the contribution to the electrostatic charging tendency of the overall system.

The terminal box shall be made from a suitable metal or glass reinforced plastic (GRP). GRP shall have a minimum Charpy impact resistance of 10 J/cm^2 in accordance with ISO 179-1.

5.7 Preferred sizes

The preferred sizes of pumps given in this document represent the most usual requirements. Performance and dimensions for these pumps are shown in Annex A for end suction pumps and Annex B for in-line pumps.

Pumps with other rated performance and/or dimensions may be used by agreement between purchaser and manufacturer. Such pumps shall comply with all other requirements of this document.

5.8 Performance requirements

5.8.1 General

The rated conditions are determined by the rated pressure relief of the cooling circuit in relation to the specified fluid properties at 60 °C.

It is the responsibility of the transformer or cooling circuit designer to design the pipework and its pressure relief to ensure the proper operation of the pump. The area before and behind the pump shall allow free flow. Especially the suction area shall be free of components that may cause turbulences. A positive suction head of the pump shall be provided. In case of collectors, their pipe diameters shall allow independent operation of the connected pumps.

Annex C defines the information required with enquiry, proposal and purchase order.

AVA Documents
Document Sharing Hub

Full document details: IEC 60076-22-5-2021

5.8.2 Hydraulic performance

Performance curves and nominal ratings for hydraulic performance shall be given for a liquid temperature of 60 °C and with the motor being supplied at rated voltage. Performance curves shall define the allowable operating range as specified by the pump manufacturer.

Pumps shall perform free of cavitation under operating conditions.

Cavitation can be avoided by low liquid velocities, low pressure drop before the pump inlet, free inlet flow area, low partial gas content.

5.8.3 Hydraulic interchangeability

When replacing one pump with another, it is important that flow in the cooling circuit be not greatly changed. This may be achieved by ensuring that the pump characteristic curves are sufficiently similar.

For the purposes of this document, hydraulic interchangeability is achieved when, for each point across the allowable operating range, one pump characteristic curve shows flow values within ±10 % or pressure values within ±8 % of another curve chosen as a datum (see Figure 1).

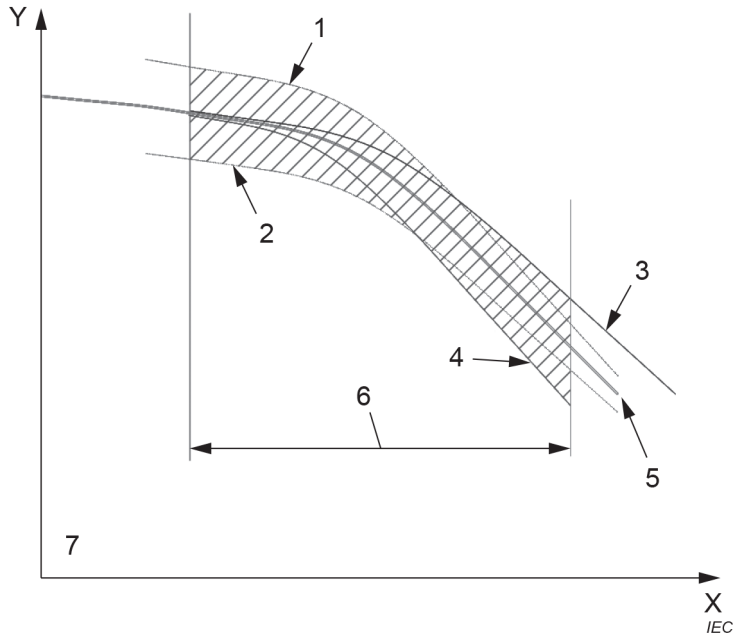

Key

X = Flow; Y = Pressure

1 +8 % Pressure

2 −8 % Pressure

3 +10 % Flow

4 −10 % Flow

5 Datum curve

6 Allowable operating range

7 Second curve shall lie within cross hatched area for whole of allowable operating range.

Figure 1 – Hydraulic interchangeability across the allowable operating range

Where, in a specific application, sufficient knowledge of the actual flow range is available, pump characteristic curves may be defined as interchangeable if the above condition is met across the actual flow range (see Figure 2).

Documents
Document Sharing Hub
Full document details: IEC 60076-22-5-2021

Annex D gives examples of the use of these hydraulic interchangeability tolerances.

It should be noted that hydraulic interchangeability does not ensure electrical or mechanical interchangeability.

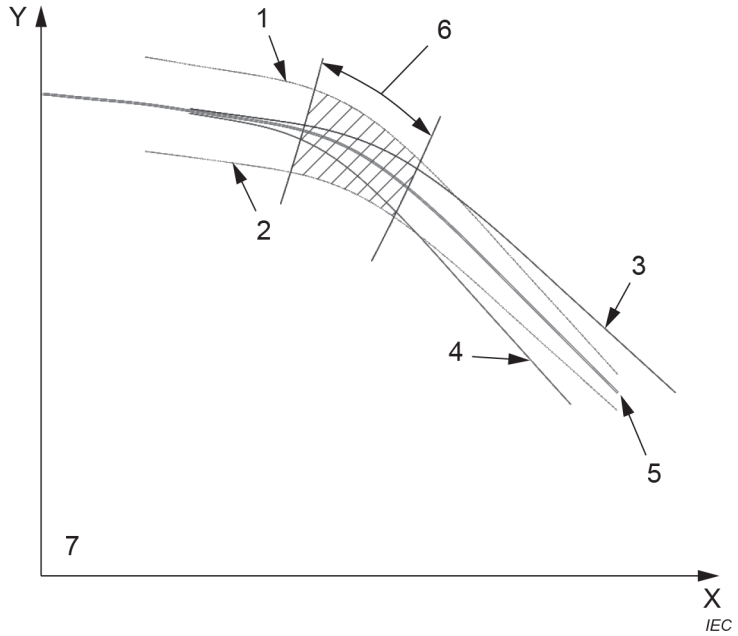

Key

X = Flow; Y = Pressure

1 +8 % Pressure

2 −8 % Pressure

3 +10 % Flow

4 −10 % Flow

5 Datum curve

6 Actual flow range

7 Second curve shall lie within cross hatched area for whole of actual flow range.

Figure 2 – Hydraulic interchangeability across an actual flow range

5.8.4 Electrical performance

5.8.4.1 Electrical supply

Pumps shall be suitable for direct-on-line starting with a supply voltage between 85 % and 110 % of the nominal voltage and within 94 % to 102 % of nominal frequency. Additionally, the pump shall be able to start at 85 % voltage at oil temperatures down to −20 °C and at 90 % down to −25 °C without damaging heating.

Motors shall be capable of recovering normal operation in the event of a system disturbance causing temporary loss of supply voltage for a period of up to three seconds followed by a sudden restoration initially to 80 % of the rated voltage.

5.8.4.2 Insulation class and temperature rise

The stator winding insulation shall conform to IEC 60085 and shall be non-hygroscopic.

The temperature rise of the motor winding when operating in liquid at 115 °C shall not exceed the liquid temperature by more than 15 K for class B insulation and 40 K for class F.

Documents
Document Sharing Hub
Full document details: IEC 60076-22-5-2021

5.8.4.3 Starting current

The starting current at rated voltage shall not exceed seven times the rated full load current of the motor subject to the tolerances given in IEC 60034-1, as appropriate.

5.8.5 Noise

Sound power levels shall not exceed the values given in IEC 60034-9.

5.9 Tests

5.9.1 General

It is essential that all test rigs are kept clean and free of contamination and foreign bodies. Oil used for testing shall be filtered to Level 12 to 10 of ISO 4406.

The routine tests shall be carried out unless waived by the purchaser.

5.9.2 List of tests

5.9.2.1 Routine tests

The following list of tests is not in any specific order:

– Winding resistance measurement (cold) (5.9.3.1);
– Direction of rotation (5.9.3.2);
– Performance reference point (5.9.3.3);
– Applied voltage test (5.9.3.4);
– Oil leakage test (5.9.3.5);
– Mechanical integrity test (5.9.3.6).

5.9.2.2 Type tests

The following list of tests is not in any specific order:

– Hydraulic performance test (5.9.4.1);
– No-load test (5.9.4.2);
– Locked rotor test (5.9.4.3);
– Starting current test (5.9.4.4);
– Temperature rise test (5.9.4.5);
– Mechanical integrity test (5.9.4.6);
– Cold start test (5.9.4.7);
– Noise test (5.9.4.8).

5.9.2.3 Special tests

Any additional test agreed between purchaser and manufacturer.

5.9.3 Routine tests

5.9.3.1 Winding resistance measurement (cold)

Values of resistance at 20 °C shall be measured.

Documents
Document Sharing Hub

Full document details: IEC 60076-22-5-2021

5.9.3.2 Direction of rotation

It shall be demonstrated that the direction of rotation is correct when the pump is connected as shown by the label on the terminal box cover.

When fitted, the device indicating correct rotation shall be shown to be clearly operational with the pump running in the correct direction and in reverse.

5.9.3.3 Performance reference point

The pump shall be tested in accordance with Grade 2 of ISO 9906, except that the test liquid shall be transformer oil at 60 °C, as specified in this document and speed measurements shall not be required. The test shall be performed at zero oil flow condition with measurement of pressure, absorbed power and current; the values shall be recorded.

5.9.3.4 Applied voltage test

With the fully assembled pump empty of oil, a dielectric test shall be carried out in accordance with IEC 60034-1.

5.9.3.5 Oil leakage test

The fully assembled pump shall be subjected to a hydrostatic pressure test using transformer oil at a minimum temperature of 60 °C. The test shall be carried out at a minimum pressure of 500 kPa (gauge) for a minimum period of 3 h.

5.9.3.6 Mechanical integrity

The pump shall be checked for free running of the rotating unit when turned by hand. When the pump is running, a check shall be made for any unusual noise.

The manufacturer shall indicate the method of test used to ensure integrity of impeller fastening. This test shall specifically demonstrate that no movement of the impeller relative to the shaft will occur if the pump is accidentally started in reverse rotation.

5.9.4 Type tests

5.9.4.1 Hydraulic performance test

The pump shall be tested in accordance with Grade 2 of ISO 9906, except that the test liquid shall be transformer oil at 60 °C, as specified in this document. Measurements of flow, speed, efficiency, pressure difference between suction and delivery side, absorbed power, current and cos φ shall be recorded at a minimum of six test points covering the flow range from zero flow to maximum flow.

The test shall be performed at rated voltage and frequency.

5.9.4.2 No-load test

With the pump empty of liquid and at rated frequency and voltage, the current and electrical power consumption shall be measured and recorded at rated voltage U_n, and at $U_n/2$, at U_n – 10 %, at U_n + 10 %, at U_n − 20 %, at U_n + 20 %.

5.9.4.3 Locked rotor test

With the rotor locked, the current and electrical power consumption shall be measured and recorded at rated voltage U_n and at $U_n/2$, at U_n − 20 %, at U_n + 20 %.

Documents
Document Sharing Hub
Full document details: IEC 60076-22-5-2021

5.9.4.4 Starting current test

The starting current shall be measured at rated voltage.

This test shall be carried out in addition to or as an alternative to the test described in 5.9.4.3 if required by the purchaser.

5.9.4.5 Temperature rise test

A temperature rise test shall be carried out at nominal voltage for 1 h. During this test, the flow and pressure shall be adjusted to the nominal values.

This test shall be immediately followed by a 1 h temperature rise test at U_n − 20 % and a further 1 h test at U_n + 20 %. During these tests, pressure and flow shall not be adjusted.

The average temperature rise of the stator winding for oil at 60 °C ± 5 K shall be determined by the method of measurement of resistance variation, i.e. determination of the temperature rise of the winding from the resistance increase according to IEC 60034-1.

The temperature rise shall not exceed 15 K for class B insulation or 40 K for class F insulation according to IEC 60085.

5.9.4.6 Mechanical integrity

In addition to the tests detailed in 5.9.3.6, the pumps shall be run at 125 % of nominal speed without oil for 2 min in accordance with IEC 60034-1.

5.9.4.7 Cold start test

The pump shall be started at minimum voltage with the liquid at minimum temperature. The pump shall reach full running speed without overheating or any other adverse observations.

A full hydraulic test loop is not required but arrangements shall be made (orifice plates, etc.) to simulate the system resistance corresponding to the nominal duty.

If required by the purchaser, means shall be provided (e.g. thermocouples) to monitor the winding temperature.

Current, rotational speed, inlet oil temperature, outlet oil temperature and, if applicable, winding temperature, shall be continuously recorded until the pump is running at nominal speed.

5.9.4.8 Noise test

Sound power level shall be determined by testing in accordance with IEC 60034-9.

5.9.5 Special tests

Additional tests may be agreed between purchaser and manufacturer.

Documents
Document Sharing Hub

Full document details: IEC 60076-22-5-2021