IEC 60092-501

Edition 4.0 2007-08

INTERNATIONAL STANDARD

Withdrawn

Electrical installations in ships – Part 501: Special features – Electric propulsion plant

IEC 60092-501:2007(E)

Documents
Document Sharing Hub

Full document details: IEC 60092-501 2007

THIS PUBLICATION IS COPYRIGHT PROTECTED

Copyright © 2007 IEC, Geneva, Switzerland

All rights reserved. Unless otherwise specified, no part of this publication may be reproduced or utilized in any form or by any means, electronic or mechanical, including photocopying and microfilm, without permission in writing from either IEC or IEC's member National Committee in the country of the requester.

If you have any questions about IEC copyright or have an enquiry about obtaining additional rights to this publication, please contact the address below or your local IEC member National Committee for further information.

IEC Central Office
3, rue de Varembé
CH-1211 Geneva 20
Switzerland
Email: inmail@iec.ch
Web: www.iec.ch

About the IEC

The International Electrotechnical Commission (IEC) is the leading global organization that prepares and publishes International Standards for all electrical, electronic and related technologies.

About IEC publications

The technical content of IEC publications is kept under constant review by the IEC. Please make sure that you have the latest edition, a corrigenda or an amendment might have been published.

- Catalogue of IEC publications: www.iec.ch/searchpub
The IEC on-line Catalogue enables you to search by a variety of criteria (reference number, text, technical committee,…). It also gives information on projects, withdrawn and replaced publications.

- IEC Just Published: www.iec.ch/online_news/justpub
Stay up to date on all new IEC publications. Just Published details twice a month all new publications released. Available on-line and also by email.

- Electropedia: www.electropedia.org
The world's leading online dictionary of electronic and electrical terms containing more than 20 000 terms and definitions in English and French, with equivalent terms in additional languages. Also known as the International Electrotechnical Vocabulary online.

- Customer Service Centre: www.iec.ch/webstore/custserv
If you wish to give us your feedback on this publication or need further assistance, please visit the Customer Service Centre FAQ or contact us:

Email: csc@iec.ch
Tel.: +41 22 919 02 11
Fax: +41 22 919 03 00

Withdrawn

Documents
Document Sharing Hub

Full document details: IEC 60092-501 2007

IEC 60092-501

Edition 4.0 2007-08

INTERNATIONAL STANDARD

withdrawn

Electrical installations in ships – Part 501: Special features – Electric propulsion plant

INTERNATIONAL ELECTROTECHNICAL COMMISSION

PRICE CODE V

ICS 47.020.060

ISBN 2-8318-9245-7

Documents
Document Sharing Hub

Full document details: IEC 60092-501 2007

CONTENTS

FOREWORD 4
INTRODUCTION 6

1 Scope 7
2 Normative references 7
3 Terms and definitions 8
4 System 9
4.1 System design 9
4.2 System responsibility 11
4.3 Torsional stress and torsional vibrations 11
4.4 Operational stability 11
4.5 Protection against moisture and condensate 12
4.6 Excitation systems 12
4.7 Wires, cables, busbars, trunking systems 12
5 Electromagnetic compatibility (EMC) and harmonic distortion 13
5.1 General 13
5.2 Total harmonic distortion, THD 13
5.3 Radio frequency interferences 13
6 Prime movers 13
6.1 General requirements 13
6.2 Speed deviations 14
6.3 Parallel operation 14
6.4 Reverse power 14
7 Generators 14
7.1 General requirements 14
7.2 Bearing and lubrication 14
7.3 Cooling 15
7.4 Protection 15
7.5 Test 15
8 Propulsion switchboards 15
9 Propulsion transformers 16
9.1 General requirements 16
9.2 Cooling 16
9.3 Instrumentation 17
9.4 Protection 17
9.5 Test 17
10 Convertors 17
10.1 General 17
10.2 Design of semiconductor convertors 17
10.3 Cooling of semiconductor convertors 18
10.4 Protection 18
10.5 Test 18
11 Harmonic filtering 18
12 Propulsion motors 19
12.1 General requirements 19

Withdrawn

AVA Documents
Document Sharing Hub

Full document details: IEC 60092-501 2007

12.2 Bearing and lubrication 19
12.3 Cooling of propulsion motors 19
12.4 Protection 19
12.5 Test 20
12.6 Short-circuit withstand capability 20
12.7 Accessibility and facilities for repairs *in situ* 20
13 Special requirements for podded drives 20
13.1 General requirements 20
13.2 Sensors 21
13.3 Protection of the propulsion motor 22
13.4 Air humidity 22
13.5 Motor supply lines 22
13.6 Slip rings 22
13.7 Azimuth drive 23
14 Control 24
14.1 Power management system (PMS) 24
14.2 Typical control configuration 24
14.3 Location of manoeuvring controls 26
14.4 Main and local control station 26
14.5 Measuring-, indicating- and monitoring equipment 26
14.6 Availability 27
15 Tests 28
15.1 General 28
15.2 In-process-tests 28
15.3 Factory acceptance test 28
15.4 Dock and sea trials 28
16 Documentation 29

Annex A (normative) Alarm-matrix 30

Figure 1 – Typical equipment (configuration) for ships with one or two propellers 10
Figure 2 – Typical control configuration 25

Table A.1 – Alarm matrix for permanent excited motors 30
Table A.2 – Alarm matrix for synchronous motors 31
Table A.3 – Alarm matrix for asynchronous motors 33
Table A.4 – Alarm matrix for d.c. motors 34

Withdrawn

Documents
Document Sharing Hub
Full document details: IEC 60092-501 2007

INTERNATIONAL ELECTROTECHNICAL COMMISSION

ELECTRICAL INSTALLATIONS IN SHIPS –

Part 501: Special features – Electric propulsion plant

FOREWORD

1) The International Electrotechnical Commission (IEC) is a worldwide organization for standardization comprising all national electrotechnical committees (IEC National Committees). The object of IEC is to promote international co-operation on all questions concerning standardization in the electrical and electronic fields. To this end and in addition to other activities, IEC publishes International Standards, Technical Specifications, Technical Reports, Publicly Available Specifications (PAS) and Guides (hereafter referred to as "IEC Publication(s)"). Their preparation is entrusted to technical committees; any IEC National Committee interested in the subject dealt with may participate in this preparatory work. International, governmental and non-governmental organizations liaising with the IEC also participate in this preparation. IEC collaborates closely with the International Organization for Standardization (ISO) in accordance with conditions determined by agreement between the two organizations.

2) The formal decisions or agreements of IEC on technical matters express, as nearly as possible, an international consensus of opinion on the relevant subjects since each technical committee has representation from all interested IEC National Committees.

3) IEC Publications have the form of recommendations for international use and are accepted by IEC National Committees in that sense. While all reasonable efforts are made to ensure that the technical content of IEC Publications is accurate, IEC cannot be held responsible for the way in which they are used or for any misinterpretation by any end user.

4) In order to promote international uniformity, IEC National Committees undertake to apply IEC Publications transparently to the maximum extent possible in their national and regional publications. Any divergence between any IEC Publication and the corresponding national or regional publication shall be clearly indicated in the latter.

5) IEC provides no marking procedure to indicate its approval and cannot be rendered responsible for any equipment declared to be in conformity with an IEC Publication.

6) All users should ensure that they have the latest edition of this publication.

7) No liability shall attach to IEC or its directors, employees, servants or agents including individual experts and members of its technical committees and IEC National Committees for any personal injury, property damage or other damage of any nature whatsoever, whether direct or indirect, or for costs (including legal fees) and expenses arising out of the publication, use of, or reliance upon, this IEC Publication or any other IEC Publications.

8) Attention is drawn to the Normative references cited in this publication. Use of the referenced publications is indispensable for the correct application of this publication.

9) Attention is drawn to the possibility that some of the elements of this IEC Publication may be the subject of patent rights. IEC shall not be held responsible for identifying any or all such patent rights.

International Standard IEC 60092-501 has been prepared by IEC technical committee 18: Electrical installations of ships and of mobile and fixed offshore units.

This fourth edition cancels and replaces the third edition published in 1984. It constitutes a technical revision.

This edition included the following significant technical changes with respect to the previous edition:

a) requirements regarding system responsibility, electromagnetic compatibility (EMC), harmonic distorsion and filtering, special requirements for ships with propulsion motor(s) and podded drives, and power management system (PMS);

b) overall technical review to update the standard according to general requirements and referenced equipment standards.

Withdrawn

AVA Documents Document Sharing Hub

Full document details: IEC 60092-501 2007

The text of this standard is based on the following documents:

FDIS	Report on voting
18/1057/FDIS	18/1063/RVD

Full information on the voting for the approval of this standard can be found in the report on voting indicated in the above table.

This publication has been drafted in accordance with the ISO/IEC Directives, Part 2.

A list of all parts of the IEC 60092 series, under the general title *Electrical installations in ships*, can be found on the IEC website.

The committee has decided that the contents of this publication will remain unchanged until the maintenance result date indicated on the IEC web site under "http://webstore.iec.ch" in the data related to the specific publication. At this date, the publication will be

- reconfirmed,
- withdrawn,
- replaced by a revised edition, or
- amended.

A bilingual version of this publication may be issued at a later date.

withdrawn

Documents
Document Sharing Hub

Full document details: IEC 60092-501 2007

INTRODUCTION

IEC 60092 forms a series of international standards for electrical installations in sea-going ships, incorporating good practice and coordinating, as far as possible, existing rules. These standards form a code of practical interpretation and amplification of the requirements of the International Convention on Safety of Life at Sea, a guide for future regulations which may be prepared and a statement of practice for use by shipowners, shipbuilders and appropriate organizations.

withdrawn

Documents
Document Sharing Hub

Full document details: IEC 60092-501 2007

ELECTRICAL INSTALLATIONS IN SHIPS –

Part 501: Special features – Electric propulsion plant

Withdrawn

1 Scope

This part of IEC 60092 specifies requirements for all electric propulsion plant and gives the specifications, system design, installation and testing of at least

- generators and their prime movers;
- switchboards;
- transformers/reactors;
- semiconductor convertors;
- propulsion motors;
- excitation systems;
- control, monitoring and safety systems;
- wires, cables, busbars, trunking systems.

Bow and stern thrusters intended as auxiliary steering devices, booster and take-home devices, all auxiliary generating plants, and accumulator battery powered propulsion machinery and equipment are excluded.

2 Normative references

The following referenced documents are indispensable for the application of this document. For dated references, only the edition cited applies. For undated references, the latest edition of the referenced document (including any amendments) applies.

IEC 60034 (all parts), *Rotating electrical machines*

IEC 60034-1:2004, *Rotating electrical machines – Part 1: Rating and performance*

IEC 60076 (all parts), *Power transformators*

IEC 60092 (all parts), *Electrical installations in ships*

IEC 60092-101, *Electrical installations in ships – Part 101: Definitions and general requirements*

IEC 60092-202, *Electrical installations in ships – Partie 202: System design – Protection*

IEC 60092-204, *Electrical installations in ships – Part 204: System design – Electric and electrohydraulic steering gear*

IEC 60092-301, *Electrical installations in ships – Part 301: Equipment – Generators and motors*

IEC 60092-302, *Electrical installations in ships* –Part 302: *Low-voltage switchgear and controlgear assemblies*

AVA Documents
Document Sharing Hub

Full document details: IEC 60092-501 2007

IEC 60092-303, *Electrical installations in ships – Part 303: Equipment - Transformers for power and lighting*

IEC 60092-504:2001, *Electrical installations in ships – Part 504: Special features – Control and instrumentation*

IEC 60146 (all parts), *Semiconductor convertors*

IEC 60146-2, *Semiconductor convertors – Part 2:Self-commutated semiconductor converters including direct d.c.converters*

IEC 61000-6-2, *Electromagnetic compatibility (EMC) – Part 6-2: Generic standards – Immunity for industrial environments*

IEC 61378-1, *Convertor transformers – Part 1: Transformers for industrial applications*

IEC 62271-200:2003, *High-voltage switchgear and controlgear – Part 200: A.C. metal-enclosed switchgear and controlgear for rated voltages above 1 kV and up to and including 52 kV*

International Maritime Organization, *International convention of the safety of life at sea* (SOLAS):2004, *Chapter II-I/ Regulations 27, 29 and 30*

3 Terms and definitions

For the purposes of this document, the following terms and definitions apply:

3.1
azimuth drive
system which moves the propulsion unit around the vertical axis

3.2
double sensor
two sensor elements in one housing

3.3
local control station
place of control where a system is installed which creates a reference value for the convertors independent from the remote control system and any external limitations

3.4
locked electrical spaces
spaces constructed as dry spaces which are provided with lockable doors and are intended solely for installation of electrical equipment

3.5
main control station
place of control of the main propulsion system which is manned under seagoing conditions

3.6
nominated body

installer or manufacturer that has been given direct responsibility for the complete propulsion system.

Withdrawn

AVA Documents Document Sharing Hub

Full document details: IEC 60092-501 2007

3.7
one failure principle
during and after a fault in a circuit, the supply to the healthy circuits is permanently ensured (continuity of supply) and after a fault in a circuit has been cleared, the supply to the healthy circuits is re-established (continuity of service)

3.8
podded drive
propulsion system in which the motor is located in a dedicated, submerged unit (pod housing) of the ship

3.9
power management system (PMS)
control and safety system which provides the load depending starts and stops of the prime movers, the load sharing, etc.

3.10
propulsion generator
generator mainly used for power supply of the propulsion system

3.11
propulsion motor
electrical motor intended to provide propulsion power

3.12
propulsion switchboard
switchboard mainly used for power distribution to the propulsion systems

3.13
redundant sensor
two single sensors in separate housings

3.14
remote control system
system which comprises all equipment necessary to operate units from a control position where the operator cannot directly observe the effect of his actions

Withdrawn

4 System

4.1 System design

4.1.1 General

A typical electrical propulsion system consists of the following hardware components:

- propulsion generators;
- switchboard;
- transformers to convert the ships voltage to the convertor voltage;
- convertor to supply the electric motor;
- control system;
- propulsion motor

A typical configuration of the hardware components is shown in Figure 1.

Documents
Document Sharing Hub
Full document details: IEC 60092-501 2007

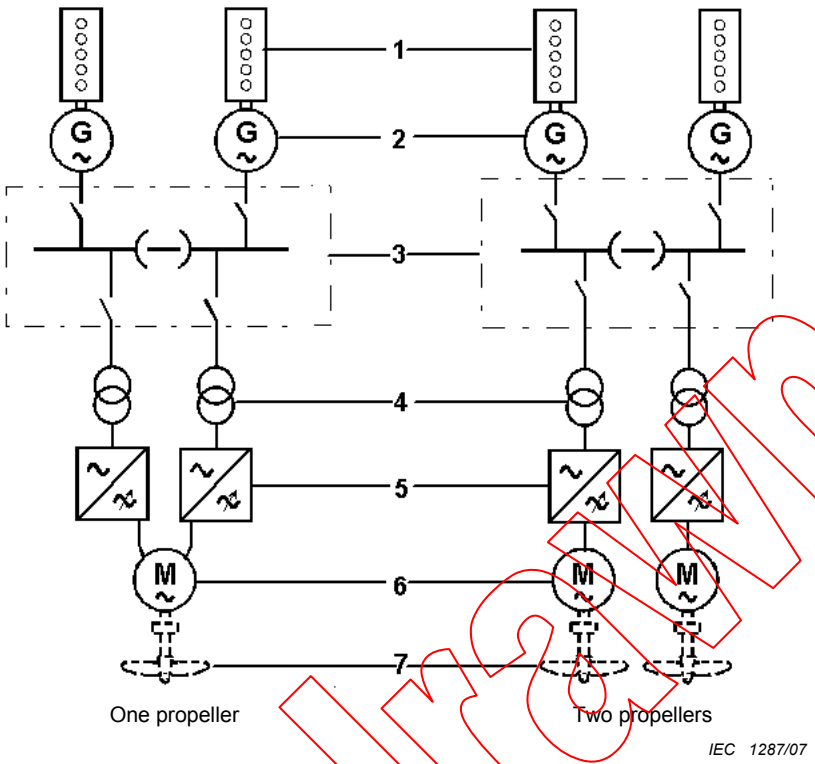

Key

1	Main engine	4	Propulsion transformer	7	Propeller
2	Propulsion generator	5	Propulsion convertor		
3	Switchboard	6	Propulsion motor		

Figure 1 – Typical equipment (configuration) for ships with one or two propellers

4.1.2 Design requirements

The one failure principle shall be the basis of the design.

NOTE Recognizable failures should not injure the one failure principle. Undetected failures should be avoided. However, it may be unavoidable that some undetected failures may injure the one failure principle.

It shall be possible for all machinery essential for the safe operation of the ship to be controlled from a local position, even in the case of failure in any part of the automatic remote control system, see Clause 14.

4.1.3 Special requirements for ships with only one propulsion motor

Synchronous and induction motors shall be equipped with two stator winding systems which can be disconnected from the respective convertor. Each convertor shall be designed for at least 50 % nominal power of the propulsion drive.

DC motors shall have two separate rectifiers, each for 50 % nominal motor current, with means for disconnecting each rectifier. The convertors shall be mutually independent. Any single failure in one convertor shall not result in complete loss of propulsion power.

Motors with permanent excitation shall be equipped with two stator winding systems which can be disconnected from the respective convertor. Additionally, there shall be a braking or

Withdrawn
AVA Documents Document Sharing Hub
Full document details: IEC 60092-501 2007