IEC 60095-4

Edition 3.0 2021-07
REDLINE VERSION

INTERNATIONAL STANDARD

colour inside

Lead-acid starter batteries –
Part 4: Dimensions of batteries for heavy vehicles

IEC 60095-4:2021-07 RLV(en)

Documents
Document Sharing Hub

Full document details: IEC 60095-4 2021 RLV

THIS PUBLICATION IS COPYRIGHT PROTECTED
Copyright © 2021 IEC, Geneva, Switzerland

All rights reserved. Unless otherwise specified, no part of this publication may be reproduced or utilized in any form or by any means, electronic or mechanical, including photocopying and microfilm, without permission in writing from either IEC or IEC's member National Committee in the country of the requester. If you have any questions about IEC copyright or have an enquiry about obtaining additional rights to this publication, please contact the address below or your local IEC member National Committee for further information.

IEC Central Office
3, rue de Varembé
CH-1211 Geneva 20
Switzerland

Tel.: +41 22 919 02 11
info@iec.ch
www.iec.ch

About the IEC
The International Electrotechnical Commission (IEC) is the leading global organization that prepares and publishes International Standards for all electrical, electronic and related technologies.

About IEC publications
The technical content of IEC publications is kept under constant review by the IEC. Please make sure that you have the latest edition, a corrigendum or an amendment might have been published.

IEC publications search - webstore.iec.ch/advsearchform
The advanced search enables to find IEC publications by a variety of criteria (reference number, text, technical committee, …). It also gives information on projects, replaced and withdrawn publications.

IEC Just Published - webstore.iec.ch/justpublished
Stay up to date on all new IEC publications. Just Published details all new publications released. Available online and once a month by email.

IEC Customer Service Centre - webstore.iec.ch/csc
If you wish to give us your feedback on this publication or need further assistance, please contact the Customer Service Centre: sales@iec.ch.

IEC online collection - oc.iec.ch
Discover our powerful search engine and read freely all the publications previews. With a subscription you will always have access to up to date content tailored to your needs.

Electropedia - www.electropedia.org
The world's leading online dictionary on electrotechnology, containing more than 22 000 terminological entries in English and French, with equivalent terms in 18 additional languages. Also known as the International Electrotechnical Vocabulary (IEV) online.

Documents
Document Sharing Hub

Full document details: IEC 60095-4 2021 RLV

IEC 60095-4

Edition 3.0 2021-07
REDLINE VERSION

INTERNATIONAL STANDARD

colour inside

Lead-acid starter batteries –
Part 4: Dimensions of batteries for heavy vehicles

INTERNATIONAL
ELECTROTECHNICAL
COMMISSION

ICS 29.220.20; 43.040.10

ISBN 978-2-8322-1005-8

Warning! Make sure that you obtained this publication from an authorized distributor.

® Registered trademark of the International Electrotechnical Commission

Documents
Document Sharing Hub

Full document details: IEC 60095-4 2021 RLV

CONTENTS

FOREWORD....4
1 Scope ~~and object~~....6
2 Normative references....6
3 Terms and definitions....6
4 Common features....7
4.1 Labelling....7
4.2 Marking of polarity....7
4.2.1 General....7
4.2.2 Marking of positive terminals....7
4.2.3 Marking of negative terminals....7
4.2.4 Design and dimensions of marking....7
4.3 Marking of plastic material....7
4.4 Dimensions and design....9
4.5 Dimensions of terminals....9
4.6 Recommendation for new development....10
5 European types....10
5.1 General....10
5.2 Fastening....10
5.3 Dimensions....10
6 North American types....9
6.1 General....14
6.1.1 Overview....14
6.1.2 Fastening....14
6.1.3 Terminal configuration, polarity....14
6.1.4 Terminal dimensions....14
6.2 Dimensions....14
7 East Asian types....20
7.1 General....20
7.1.1 Overview....20
7.1.2 Fastening....20
7.1.3 Terminal configuration, polarity....20
7.1.4 Terminal dimensions....20
7.2 Dimensions....21
Bibliography....23

Figure 1 – Marking of polarity....7
~~Figure 2 – Marking of polypropylene....~~
Figure 2 – Marking of polypropylene-polyethylene copolymer battery components....8
Figure 3 – Dimensions of positive (on the right) and negative (on the left) terminal....10
Figure 4 – EU series – Type D2....12
Figure 5 – EU series – Types A, B, C....13
Figure 6 – AM series – Type 4D....18
~~Figure 7 – Dimensions (mm) of tapered terminal....~~
~~Figure 8 – AM series – Type 8D....~~

AVA Documents
Document Sharing Hub

~~Figure 9 – AM series – Type 31T~~
~~Figure 10 – Dimensions of stud terminal~~
~~Figure 11 – AM series – Type 31A~~
~~Figure 12 – Dimensions (mm) of tapered terminal~~
Figure 7 – AM series – Type 8D 18
Figure 8 – AM series – Type 31T 19
Figure 9 – Dimensions of stud terminal 19
Figure 10 – AM series – Type 31A 20
Figure 11 – AS series – Type E 41 22
Figure 12 – AS series – Types F51, G51 and H52 22

Table 1 – EU series – Dimensions of batteries 11
Table 2 – AM series – Dimensions of batteries 14
~~Table 3 – Dimensions of tapered terminal~~
Table 3 – AS series – Dimensions of batteries 21

Documents
Document Sharing Hub
Full document details: IEC 60095-4 2021 RLV

INTERNATIONAL ELECTROTECHNICAL COMMISSION

LEAD-ACID STARTER BATTERIES –

Part 4: Dimensions of batteries for heavy vehicles

FOREWORD

1) The International Electrotechnical Commission (IEC) is a worldwide organization for standardization comprising all national electrotechnical committees (IEC National Committees). The object of IEC is to promote international co-operation on all questions concerning standardization in the electrical and electronic fields. To this end and in addition to other activities, IEC publishes International Standards, Technical Specifications, Technical Reports, Publicly Available Specifications (PAS) and Guides (hereafter referred to as "IEC Publication(s)"). Their preparation is entrusted to technical committees; any IEC National Committee interested in the subject dealt with may participate in this preparatory work. International, governmental and non-governmental organizations liaising with the IEC also participate in this preparation. IEC collaborates closely with the International Organization for Standardization (ISO) in accordance with conditions determined by agreement between the two organizations.

2) The formal decisions or agreements of IEC on technical matters express, as nearly as possible, an international consensus of opinion on the relevant subjects since each technical committee has representation from all interested IEC National Committees.

3) IEC Publications have the form of recommendations for international use and are accepted by IEC National Committees in that sense. While all reasonable efforts are made to ensure that the technical content of IEC Publications is accurate, IEC cannot be held responsible for the way in which they are used or for any misinterpretation by any end user.

4) In order to promote international uniformity, IEC National Committees undertake to apply IEC Publications transparently to the maximum extent possible in their national and regional publications. Any divergence between any IEC Publication and the corresponding national or regional publication shall be clearly indicated in the latter.

5) IEC itself does not provide any attestation of conformity. Independent certification bodies provide conformity assessment services and, in some areas, access to IEC marks of conformity. IEC is not responsible for any services carried out by independent certification bodies.

6) All users should ensure that they have the latest edition of this publication.

7) No liability shall attach to IEC or its directors, employees, servants or agents including individual experts and members of its technical committees and IEC National Committees for any personal injury, property damage or other damage of any nature whatsoever, whether direct or indirect, or for costs (including legal fees) and expenses arising out of the publication, use of, or reliance upon, this IEC Publication or any other IEC Publications.

8) Attention is drawn to the Normative references cited in this publication. Use of the referenced publications is indispensable for the correct application of this publication.

9) Attention is drawn to the possibility that some of the elements of this IEC Publication may be the subject of patent rights. IEC shall not be held responsible for identifying any or all such patent rights.

This redline version of the official IEC Standard allows the user to identify the changes made to the previous edition IEC 60095-4:2008. A vertical bar appears in the margin wherever a change has been made. Additions are in green text, deletions are in strikethrough red text.

Documents
Document Sharing Hub

Full document details: IEC 60095-4 2021 RLV

International Standard IEC 60095-4 has been prepared by IEC technical committee 21: Secondary cells and batteries.

This third edition cancels and replaces the second edition published in 2008. This edition constitutes a technical revision.

This edition includes the following significant technical changes with respect to the previous edition:

a) values of "tolerance", in particular for European batteries;

b) update of figures for USA and Asian batteries.

The text of this International Standard is based on the following documents:

FDIS	Report on voting
21/1087/FDIS	21/1091/RVD

Full information on the voting for its approval can be found in the report on voting indicated in the above table.

The language used for the development of this International Standard is English.

This document was drafted in accordance with ISO/IEC Directives, Part 2, and developed in accordance with ISO/IEC Directives, Part 1 and ISO/IEC Directives, IEC Supplement, available at www.iec.ch/members_experts/refdocs. The main document types developed by IEC are described in greater detail at www.iec.ch/standardsdev/publications.

A list of all parts in the IEC 60095 series, published under the general title *Lead-acid starter batteries*, can be found on the IEC website.

The committee has decided that the contents of this document will remain unchanged until the stability date indicated on the IEC website under webstore.iec.ch in the data related to the specific document. At this date, the document will be

- reconfirmed,
- withdrawn,
- replaced by a revised edition, or
- amended.

IMPORTANT – The 'colour inside' logo on the cover page of this publication indicates that it contains colours which are considered to be useful for the correct understanding of its contents. Users should therefore print this document using a colour printer.

Documents
Document Sharing Hub

Full document details: IEC 60095-4 2021 RLV

LEAD-ACID STARTER BATTERIES –

Part 4: Dimensions of batteries for heavy vehicles

1 Scope ~~and object~~

This part of IEC 60095 is applicable to lead-acid batteries used for starting, lighting and ignition of heavy trucks, commercial vehicles, busses and agricultural trucks.

The object of this document is to specify global requirements of the main dimensions of starter batteries for Europe, North America and East Asia.

This document comprises 12 types of "preferred types" of batteries.

This document specifies dimensions of 4 types of batteries each for Europe (types A, B, C and D2), North America (types 4D, 8D, 31T, 31A) and East Asia (types E41, F51, G51, H52).

2 Normative references

The following documents are referred to in the text in such a way that some or all of their content constitutes requirements of this document. For dated references, only the edition cited applies. For undated references, the latest edition of the referenced document (including any amendments) applies.

IEC 60050-482~~:2004~~, *International Electrotechnical Vocabulary – Part 482: Primary and secondary cells and batteries*

IEC 60095-1, *Lead-acid starter batteries – Part 1: General requirements and methods of test*

IEC 60417:2002, *Graphical symbols for use on equipment*

ISO/IEC 10646, *Information technology – Universal coded character set (UCS)*

ISO 1043-1, *Plastics – Symbols and abbreviated terms – Part 1: Basic polymers and their special characteristics*

~~ISO 7000, *Graphical symbols for use on equipment – Index and synopsis*~~

ISO 11469, *Plastics – Generic identification and marking of plastics products*

3 Terms and definitions

For the purposes of this document, the terms and definitions given in IEC 60050-482 apply.

ISO and IEC maintain terminological databases for use in standardization at the following addresses:

- IEC Electropedia: available at http://www.electropedia.org/
- ISO Online browsing platform: available at http://www.iso.org/obp

Documents
Document Sharing Hub

Full document details: IEC 60095-4 2021 RLV

4 Common features

4.1 Labelling

The batteries shall be marked in accordance with IEC 60095-1.

4.2 Marking of polarity

4.2.1 General

The batteries shall carry the marking of polarity, at least of the positive terminal.

4.2.2 Marking of positive terminals

This marking shall take the form of the symbol '+' either on the upper surface of the positive terminal or on the lid adjacent to the positive terminal.

4.2.3 Marking of negative terminals

If the negative polarity is also marked, the marking shall take the form of the symbol '–', either on the upper surface of the negative terminal or on the lid adjacent to the negative terminal.

~~NOTE~~ As an alternative, the wording "POS" and "NEG" is permitted for the North American market only.

4.2.4 Design and dimensions of marking

The symbols used for marking the terminals shall be in accordance with IEC 60417-5005:2012-10 for the positive polarity and IEC 60417-5006:2012-10 for the negative polarity. ~~Suggested dimensions are shown in Figure 1.~~

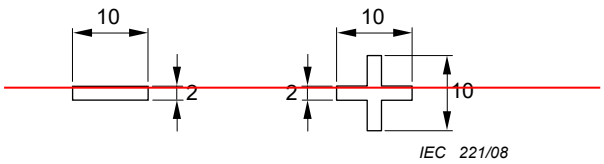

~~Permissible are 0,3 mm – 0,5 mm, indented or relief.~~

The dimensions of the marking shall be according to Figure 1.

The polarity symbols may be either indented or embossed by 0,4 mm ± 0,1 mm.

Dimensions in millimetres

Figure 1 – Marking of polarity

Documents
Document Sharing Hub
Full document details: IEC 60095-4 2021 RLV

4.3 Marking of plastic material

~~Batteries are universally marked to identify the plastic material. Various marking schemes exist around the world in line with local regulations. However all schemes identify the plastic material by embossing or indenting it into the battery housing. The material content shall be in accordance with ISO 1043-1.~~

~~"PP/PE" or "PP" is used as the marking for types of plastic materials.~~

~~Some materials also include the recycling symbol (ISO 7000-1135) as shown in Figure 2.~~

~~**Figure 2 – Marking of polypropylene**~~

Injection moulded battery components need to be marked according to ISO 11469 and ISO 1043-1. The marking shall be placed on the bottom of the battery container or on one short side near the ledge.

According to ISO 11469 and ISO 1043-1 the minimum marking for polypropylene-polyethylene copolymer is >PP< or >PP/PE<.

In addition, it is possible to show the recycling symbol with number 7 (Unicode character 'RECYCLING SYMBOL FOR TYPE-7 PLASTICS' (U+2679) according to ISO/IEC 10646) and the term "Other".

The recommended thickness is (0,3 ± 0,1) mm. The height of the marking characters shall be between 5 mm and 7 mm.

An example for this marking is shown in Figure 2.

OTHER

>PP/PE<

IEC

Figure 2 – Marking of polypropylene-polyethylene copolymer battery components

Producers are encouraged to consult the regulations of the target market.

Documents
Document Sharing Hub

Full document details: IEC 60095-4 2021 RLV

It is permissible to use the number coding 7 or 07 for PP/PE and the addition of "other" to cover additives to the plastic material.

4.4 Dimensions and design

All dimensions are in millimetres and sometime also in inches when mentioned in brackets. Details of the design that are not indicated in the generic drawings have to be chosen appropriately. The illustrations in this document, especially those of the design of the lids, handles, ribs, ledges, vent caps and their locations are not mandatory.

4.5 Dimensions of terminals

The dimensions of the tapered positive and negative terminal shall be according to Figure 3.

Dimensions in millimetres

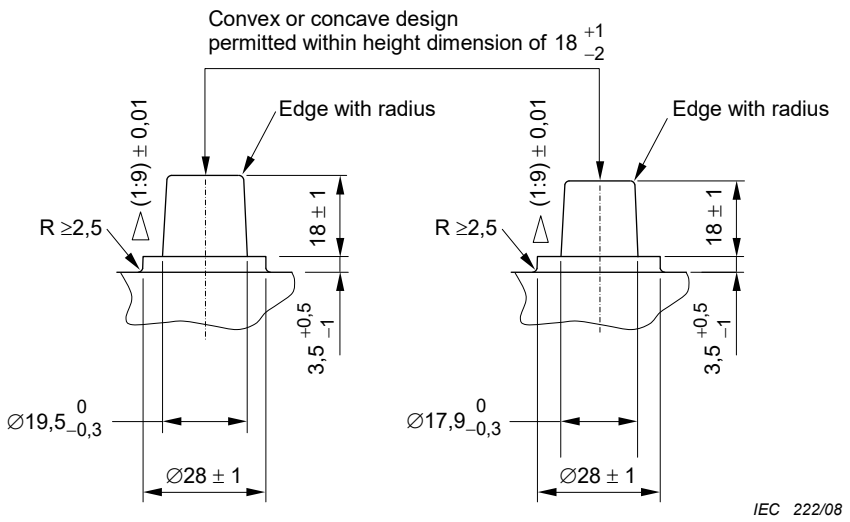

~~The dimensions describing the base of the terminal are given as a recommendation and are not mandatory.~~

Documents
Document Sharing Hub
Full document details: IEC 60095-4 2021 RLV

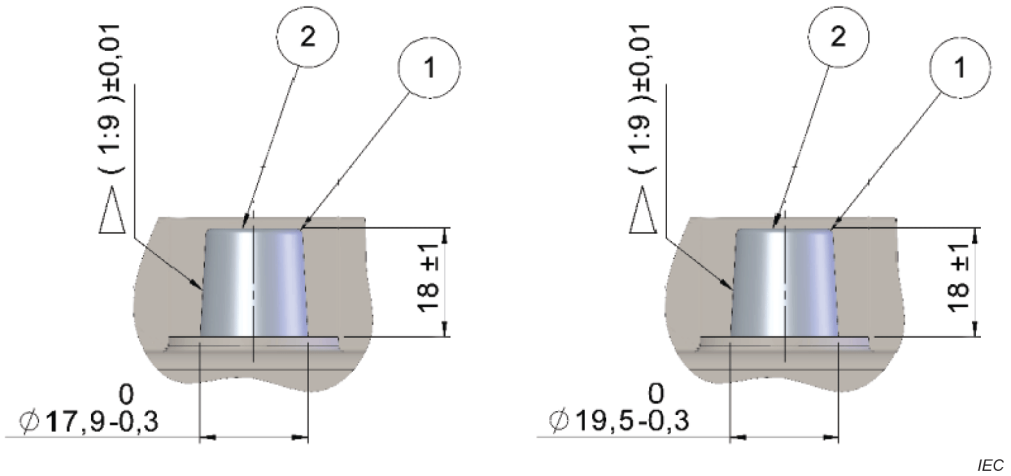

Key

1 Edge with radius

2 Convex or concave surface design permitted within height dimensions of (18^{+1}_{-2}) mm related to the centre of the terminal

Figure 3 – Dimensions of positive (on the right) and negative (on the left) terminal

4.6 Recommendation for new development

For future new developments of heavy vehicles, it is strongly recommended to use only batteries from this document.

~~Several other types of batteries exist under the standards of national or regional organisations. They are not included in this International Standard.~~

5 European types

5.1 General

This applies to the series of lead-acid starter batteries for heavy trucks, widely and predominantly used in Europe. In the following, the series is designated as "EU". The EU series comprises four types.

5.2 Fastening

All types are intended for fastening by the upper part of the battery only.

This fastening shall be realized at a level defined by the dimension "h_1" in the figures. The configuration shall permit the fitting of an angle-iron frame, both legs of which are 20 mm wide, for the major part of the lid's four sides.

~~5.1.2 Terminal configurations, polarity~~

~~The terminal configuration and polarity shall be as shown in Figures 4 and 5.~~

5.3 Dimensions

The main dimensions are represented by symbols, as indicated in Figure 4 and Figure 5. The dimensions according to the symbols shall be in accordance with Table 1.

Documents
Document Sharing Hub
Full document details: IEC 60095-4 2021 RLV

Table 1 – EU series – Dimensions of batteries

Dimensions in millimetres

Type	Length				Width			Height	
	l	l_1	l_2	l_3	b	b_1	b_2	h	h_1
D2	349^{+0}_{-5}	344^{+0}_{-8}	--	--	175^{+0}_{-4}	162^{+4}_{-4}	--	235^{+0}_{-4}	213^{+0}_{-4}
A	513^{+0}_{-4}	475^{+0}_{-3}	482^{+2}_{-2}	200^{+4}_{-4}	188^{+2}_{-2}	178^{+0}_{-2}	86^{+1}_{-1}	223 max	195^{+0}_{-3}
B	513^{+0}_{-4}	475^{+0}_{-3}	482^{+2}_{-2}	200^{+4}_{-4}	222^{+2}_{-2}	210^{+0}_{-2}	102^{+1}_{-1}	223 max	195^{+0}_{-3}
C	518^{+0}_{-8}	475^{+0}_{-3}	482^{+4}_{-2}	200^{+4}_{-4}	274^{+2}_{-2}	265^{+0}_{-2}	130^{+1}_{-1}	242 max	216^{+0}_{-3}
~~NOTE~~ The length, width and height symbols refer to Figure 4 and Figure 5.									

Documents
Document Sharing Hub
Full document details: IEC 60095-4 2021 RLV

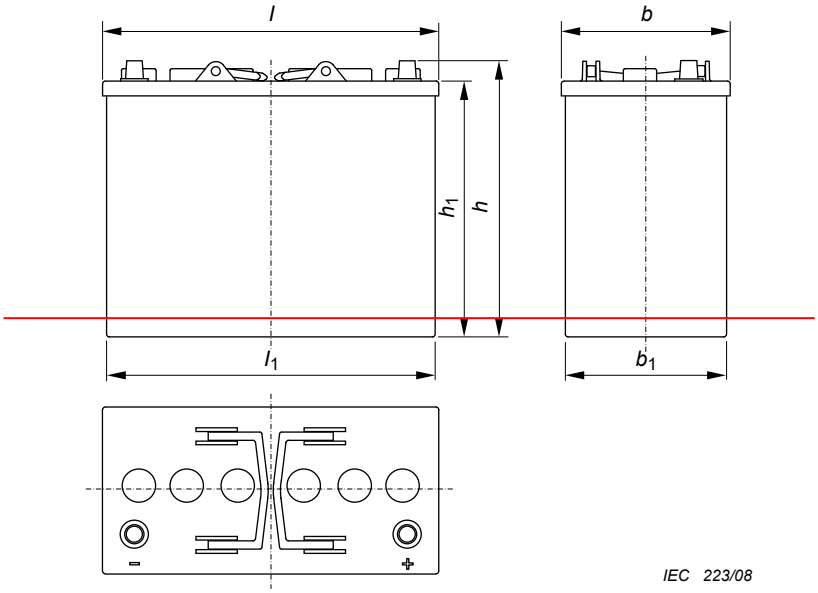

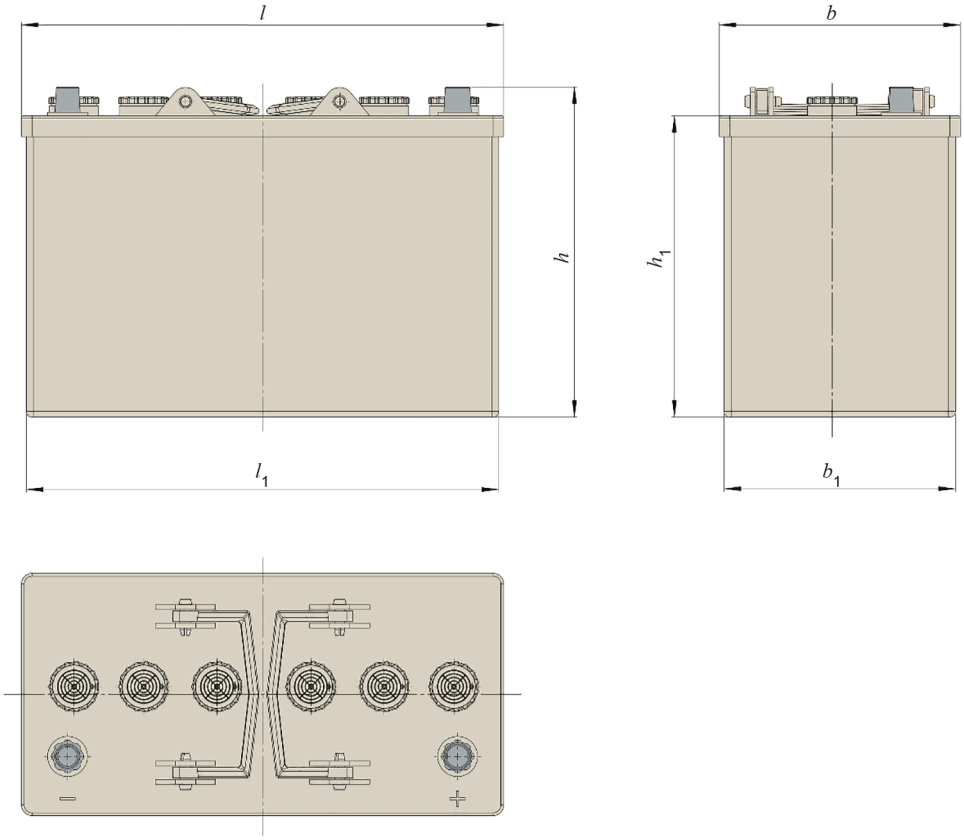

Figure 4 – EU series – Type D2

Documents
Document Sharing Hub
Full document details: IEC 60095-4 2021 RLV