IEC 60122-4

Edition 1.0 2019-01

INTERNATIONAL STANDARD

NORME INTERNATIONALE

colour inside

Quartz crystal units of assessed quality – Part 4: Crystal units with thermistors

Résonateurs à quartz sous assurance de la qualité – Partie 4: Résonateurs à quartz équipés de thermistances

IEC 60122-4:2019-01(en-fr)

Documents
Document Sharing Hub

Full document details: IEC 60122-4 2019

THIS PUBLICATION IS COPYRIGHT PROTECTED
Copyright © 2019 IEC, Geneva, Switzerland

All rights reserved. Unless otherwise specified, no part of this publication may be reproduced or utilized in any form or by any means, electronic or mechanical, including photocopying and microfilm, without permission in writing from either IEC or IEC's member National Committee in the country of the requester. If you have any questions about IEC copyright or have an enquiry about obtaining additional rights to this publication, please contact the address below or your local IEC member National Committee for further information.

Droits de reproduction réservés. Sauf indication contraire, aucune partie de cette publication ne peut être reproduite ni utilisée sous quelque forme que ce soit et par aucun procédé, électronique ou mécanique, y compris la photocopie et les microfilms, sans l'accord écrit de l'IEC ou du Comité national de l'IEC du pays du demandeur. Si vous avez des questions sur le copyright de l'IEC ou si vous désirez obtenir des droits supplémentaires sur cette publication, utilisez les coordonnées ci-après ou contactez le Comité national de l'IEC de votre pays de résidence.

IEC Central Office
3, rue de Varembé
CH-1211 Geneva 20
Switzerland

Tel.: +41 22 919 02 11
info@iec.ch
www.iec.ch

About the IEC
The International Electrotechnical Commission (IEC) is the leading global organization that prepares and publishes International Standards for all electrical, electronic and related technologies.

About IEC publications
The technical content of IEC publications is kept under constant review by the IEC. Please make sure that you have the latest edition, a corrigendum or an amendment might have been published.

IEC publications search - webstore.iec.ch/advsearchform
The advanced search enables to find IEC publications by a variety of criteria (reference number, text, technical committee,…). It also gives information on projects, replaced and withdrawn publications.

IEC Just Published - webstore.iec.ch/justpublished
Stay up to date on all new IEC publications. Just Published details all new publications released. Available online and once a month by email.

IEC Customer Service Centre - webstore.iec.ch/csc
If you wish to give us your feedback on this publication or need further assistance, please contact the Customer Service Centre: sales@iec.ch.

Electropedia - www.electropedia.org
The world's leading online dictionary on electrotechnology, containing more than 22 000 terminological entries in English and French, with equivalent terms in 16 additional languages. Also known as the International Electrotechnical Vocabulary (IEV) online.

IEC Glossary - std.iec.ch/glossary
67 000 electrotechnical terminology entries in English and French extracted from the Terms and Definitions clause of IEC publications issued since 2002. Some entries have been collected from earlier publications of IEC TC 37, 77, 86 and CISPR.

A propos de l'IEC
La Commission Electrotechnique Internationale (IEC) est la première organisation mondiale qui élabore et publie des Normes internationales pour tout ce qui a trait à l'électricité, à l'électronique et aux technologies apparentées.

A propos des publications IEC
Le contenu technique des publications IEC est constamment revu. Veuillez vous assurer que vous possédez l'édition la plus récente, un corrigendum ou amendement peut avoir été publié.

Recherche de publications IEC - webstore.iec.ch/advsearchform
La recherche avancée permet de trouver des publications IEC en utilisant différents critères (numéro de référence, texte, comité d'études,…). Elle donne aussi des informations sur les projets et les publications remplacées ou retirées.

IEC Just Published - webstore.iec.ch/justpublished
Restez informé sur les nouvelles publications IEC. Just Published détaille les nouvelles publications parues. Disponible en ligne et une fois par mois par email.

Service Clients - webstore.iec.ch/csc
Si vous désirez nous donner des commentaires sur cette publication ou si vous avez des questions contactez-nous: sales@iec.ch.

Electropedia - www.electropedia.org
Le premier dictionnaire d'électrotechnologie en ligne au monde, avec plus de 22 000 articles terminologiques en anglais et en français, ainsi que les termes équivalents dans 16 langues additionnelles. Egalement appelé Vocabulaire Electrotechnique International (IEV) en ligne.

Glossaire IEC - std.iec.ch/glossary
67 000 entrées terminologiques électrotechniques, en anglais et en français, extraites des articles Termes et Définitions des publications IEC parues depuis 2002. Plus certaines entrées antérieures extraites des publications des CE 37, 77, 86 et CISPR de l'IEC.

AVA Documents
Document Sharing Hub

Full document details: IEC 60122-4 2019

IEC 60122-4

Edition 1.0 2019-01

INTERNATIONAL STANDARD

NORME INTERNATIONALE

colour inside

Quartz crystal units of assessed quality – Part 4: Crystal units with thermistors

Résonateurs à quartz sous assurance de la qualité – Partie 4: Résonateurs à quartz équipés de thermistances

INTERNATIONAL ELECTROTECHNICAL COMMISSION

COMMISSION ELECTROTECHNIQUE INTERNATIONALE

ICS 31.140

ISBN 978-2-8322-6457-7

Warning! Make sure that you obtained this publication from an authorized distributor.
Attention! Veuillez vous assurer que vous avez obtenu cette publication via un distributeur agréé.

® Registered trademark of the International Electrotechnical Commission
Marque déposée de la Commission Electrotechnique Internationale

AVA Documents
Document Sharing Hub

Full document details: IEC 60122-4 2019

CONTENTS

FOREWORD 3
1 Scope 5
2 Normative references 5
3 Terms, definitions, units and symbols 6
3.1 Terms and definitions 6
3.2 Units and symbols 6
4 Specifications 6
4.1 General 6
4.2 Structure of crystal units with thermistors 7
4.3 Handling of the thermistor 7
4.4 Shipping requirements 7
5 Delivery conditions 8
6 Quality and reliability 8
Annex A (informative) Effect of frequency stability using crystal units with thermistors 9
A.1 Object 9
A.2 Comparison of conventional crystal units with crystal units with thermistors 9
A.3 Verification test of crystal units with thermistors 10
A.3.1 Test condition 10
A.3.2 Test result 11
A.4 Example of crystal units with thermistors 12
A.4.1 Structure 12
A.4.2 Terminal functions 13
Bibliography 14

Figure 1 – Block diagrams of the quartz crystal units 7
Figure A.1 – Conventional crystal oscillator with thermistor 9
Figure A.2 – Conceptual diagram for crystal units with thermistors 10
Figure A.3 – Test condition 11
Figure A.4 – Test result 12
Figure A.5 – Crystal units with thermistors inside enclosure (side view) 13
Figure A.6 – Crystal units with thermistors outside enclosure (side view) 13
Figure A.7 – Typical example of crystal units with thermistors – Terminal functions 13

Documents
Document Sharing Hub

Full document details: IEC 60122-4 2019

INTERNATIONAL ELECTROTECHNICAL COMMISSION

QUARTZ CRYSTAL UNITS OF ASSESSED QUALITY –

Part 4: Crystal units with thermistors

FOREWORD

1) The International Electrotechnical Commission (IEC) is a worldwide organization for standardization comprising all national electrotechnical committees (IEC National Committees). The object of IEC is to promote international co-operation on all questions concerning standardization in the electrical and electronic fields. To this end and in addition to other activities, IEC publishes International Standards, Technical Specifications, Technical Reports, Publicly Available Specifications (PAS) and Guides (hereafter referred to as "IEC Publication(s)"). Their preparation is entrusted to technical committees; any IEC National Committee interested in the subject dealt with may participate in this preparatory work. International, governmental and non-governmental organizations liaising with the IEC also participate in this preparation. IEC collaborates closely with the International Organization for Standardization (ISO) in accordance with conditions determined by agreement between the two organizations.
2) The formal decisions or agreements of IEC on technical matters express, as nearly as possible, an international consensus of opinion on the relevant subjects since each technical committee has representation from all interested IEC National Committees.
3) IEC Publications have the form of recommendations for international use and are accepted by IEC National Committees in that sense. While all reasonable efforts are made to ensure that the technical content of IEC Publications is accurate, IEC cannot be held responsible for the way in which they are used or for any misinterpretation by any end user.
4) In order to promote international uniformity, IEC National Committees undertake to apply IEC Publications transparently to the maximum extent possible in their national and regional publications. Any divergence between any IEC Publication and the corresponding national or regional publication shall be clearly indicated in the latter.
5) IEC itself does not provide any attestation of conformity. Independent certification bodies provide conformity assessment services and, in some areas, access to IEC marks of conformity. IEC is not responsible for any services carried out by independent certification bodies.
6) All users should ensure that they have the latest edition of this publication.
7) No liability shall attach to IEC or its directors, employees, servants or agents including individual experts and members of its technical committees and IEC National Committees for any personal injury, property damage or other damage of any nature whatsoever, whether direct or indirect, or for costs (including legal fees) and expenses arising out of the publication, use of, or reliance upon, this IEC Publication or any other IEC Publications.
8) Attention is drawn to the Normative references cited in this publication. Use of the referenced publications is indispensable for the correct application of this publication.
9) Attention is drawn to the possibility that some of the elements of this IEC Publication may be the subject of patent rights. IEC shall not be held responsible for identifying any or all such patent rights.

International Standard IEC 60122-4 has been prepared by IEC technical committee TC 49: Piezoelectric, dielectric and electrostatic devices and associated materials for frequency control, selection and detection.

The text of this International Standard is based on the following documents:

CDV	Report on voting
49/1281/CDV	49/1291/RVC

Full information on the voting for the approval of this International Standard can be found in the report on voting indicated in the above table.

This document has been drafted in accordance with the ISO/IEC Directives, Part 2.

A list of all parts in the IEC 60122 series, published under the general title *Quartz crystal units of assessed quality*, can be found on the IEC website.

AVA Documents
Document Sharing Hub

The committee has decided that the contents of this document will remain unchanged until the stability date indicated on the IEC website under "http://webstore.iec.ch" in the data related to the specific document. At this date, the document will be

- reconfirmed,
- withdrawn,
- replaced by a revised edition, or
- amended.

IMPORTANT – The 'colour inside' logo on the cover page of this publication indicates that it contains colours which are considered to be useful for the correct understanding of its contents. Users should therefore print this document using a colour printer.

Documents
Document Sharing Hub

Full document details: IEC 60122-4 2019

QUARTZ CRYSTAL UNITS OF ASSESSED QUALITY –

Part 4: Crystal units with thermistors

1 Scope

This part of IEC 60122 is applicable to crystal units with thermistors mainly used in the field of mobile communication that requires high frequency stability such as local reference signal generator for the mobile phone base station or GPS. This document provides users with technical guidelines of crystal units with thermistors as well as basic knowledge of common crystal units with thermistors.

2 Normative references

The following documents are referred to in the text in such a way that some or all of their content constitutes requirements of this document. For dated references, only the edition cited applies. For undated references, the latest edition of the referenced document (including any amendments) applies.

IEC 60027 (all parts), *Letter symbols to be used in electrical technology*

IEC 60050-561, *International Electrotechnical Vocabulary – Part 561: Piezoelectric, dielectric and electrostatic devices and associated materials for frequency control, selection and detection*

IEC 60068 (all parts), *Environmental testing*

IEC 60122-1:2002, *Quartz crystal units of assessed quality – Part 1: Generic specification*
IEC 60122-1:2002/AMD1:2017

IEC 60122-2-1, *Quartz crystal units for frequency control and selection – Part 2: Guide to the use of quartz crystal units for frequency control and selection – Section One: Quartz crystal units for microprocessor clock supply*

IEC 60444-1, *Measurement of quartz crystal unit parameters by zero phase technique in a pi-network – Part 1: Basic method for the measurement of resonance frequency and resonance resistance of quartz crystal units by zero phase technique in a pi-network*

IEC 60444-5, *Measurement of quartz crystal unit parameters – Part 5: Methods for the determination of equivalent electrical parameters using automatic network analyzer techniques and error correction*

IEC 60444-9, *Measurement of quartz crystal unit parameters – Part 9: Measurement of spurious resonances of piezoelectric crystal units*

IEC 60539-1:2016, *Directly heated negative temperature coefficient thermistors – Part 1: Generic specification*

IEC 60617 (all parts), *Graphical symbols for diagrams* (available at http://std.iec.ch/iec60617)

IEC 63041-1, *Piezoelectric sensors – Part 1: Generic specifications*

Documents
Document Sharing Hub

Full document details: IEC 60122-4 2019

ISO 80000-1:2009, *Quantities and units – Part 1: General*

3 Terms, definitions, units and symbols

For the purposes of this document, the terms and definitions given in IEC 60027 (all parts), IEC 60050-561, IEC 60617, IEC 63041-1 and ISO 80000-1 and the following apply.

ISO and IEC maintain terminological databases for use in standardization at the following addresses:

- IEC Electropedia: available at http://www.electropedia.org/
- ISO Online browsing platform: available at http://www.iso.org/obp

3.1 Terms and definitions

3.1.1
FT curve coefficient
coefficient of first, second and third order frequency temperature characteristic curve

3.1.2
residual frequency stability slope
temperature differential of difference between actual FT data and calculated FT value

3.1.3
normal zero-power resistance
normal value at the standard reference temperature of 25 °C, unless otherwise specified

[SOURCE: IEC 60539-1: 2016, 3.19]

3.1.4
B-value
index of the thermal sensitivity

[SOURCE: IEC 60539-1: 2016, 3.22]

3.2 Units and symbols

Crystal units with thermistors covered in this document are those used for the high stability signal generator. For the purposes of this document, units and letter symbols shall, wherever possible, be taken from the following standards: IEC 60027, IEC 60050-561, IEC 60617, IEC 63041-1 and ISO 80000-1:2009.

4 Specifications

4.1 General

Crystal units with thermistors are used for the high stability signal generator. For example, a local reference signal generator is synchronized to the mobile phone base station, or a local reference signal generator for receiving a signal from satellite positioning system represented by Navigation Satellite System.

Characteristics related to crystal units shall follow IEC 60122-2-1, IEC 60444-1, IEC 60444-5, and IEC 60444-9.

Environmental testing shall meet the requirements of IEC 60068 (all parts).

Documents
Document Sharing Hub

Full document details: IEC 60122-4 2019

Concepts and specifications for the crystal units with thermistors are shown in detail in 4.2 to 4.4.

4.2 Structure of crystal units with thermistors

Quartz crystal and thermistor are placed inside or outside enclosures that are different from conventional crystal units.

And equipped with external terminal for quartz crystal and for thermistor (see Figure 1).

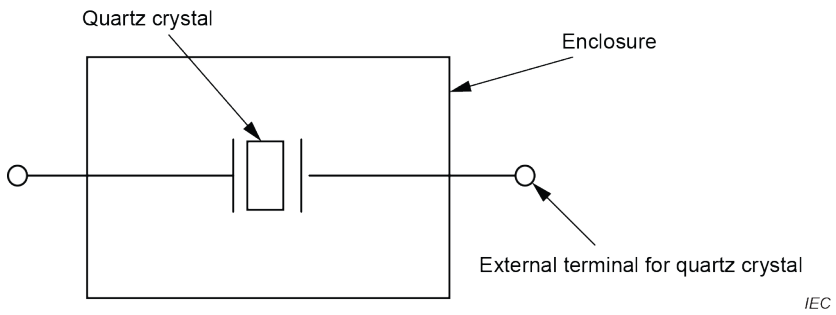

a) Conventional quartz crystal resonator units

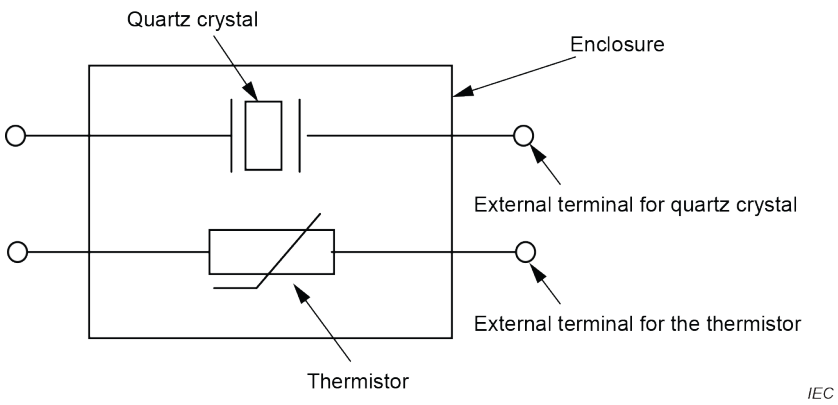

b) Quartz crystal units with thermistors

Figure 1 – Block diagrams of the quartz crystal units

The effect of frequency stability using crystal units with the thermistors and actual structures are described in Annex A.

4.3 Handling of the thermistor

Thermistor position and fixing method shall be considered as follows:

– Damage for thermistor during handling.
– Fixation method considering solder heating experienced when the product is used.

4.4 Shipping requirements

The requirements listed below shall be specified upon agreement between the supplier and the user:

– First, second and third order FT curve coefficient.
– Residual frequency stability slope.
– Normal zero-power resistance.
– B-value.

Documents
Document Sharing Hub
Full document details: IEC 60122-4 2019

5 Delivery conditions

Clause 3 of IEC 60122-1:2002 applies.

6 Quality and reliability

Clauses 4 of IEC 60122-1:2002 and IEC 60122-1/AMD1:2017 apply.

Documents
Document Sharing Hub

Full document details: IEC 60122-4 2019

Annex A
(informative)

Effect of frequency stability using crystal units with thermistors

A.1 Object

The object of Annex A is to describe crystal units with thermistors in detail and the effect of frequency stability, and examples.

A.2 Comparison of conventional crystal units with crystal units with thermistors

Figure A.1 shows the conventional TCXO (temperature compensated crystal oscillator) with crystal units and thermistor. In the figure, crystal unit and thermistor on the PCB are described.

The thermistor gives a voltage according to ambient temperature that is converted from analogue to digital data. The digital data will pick up the voltage data from the pre-set memory. The voltage data will convert to analogue voltage and control VCXO to compensate frequency. Accuracy of compensation will be better if the thermistor provides voltage that corresponds as much as possible to the actual crystal temperature.

However, in this structure, temperature difference between the crystal blank and thermistor is large due to the different positions of each part. The temperatures of crystal blank and thermistor are mainly dependent on the position of other parts on the PCB that generate heat. Due to this temperature difference, compensated frequency stability is not small.

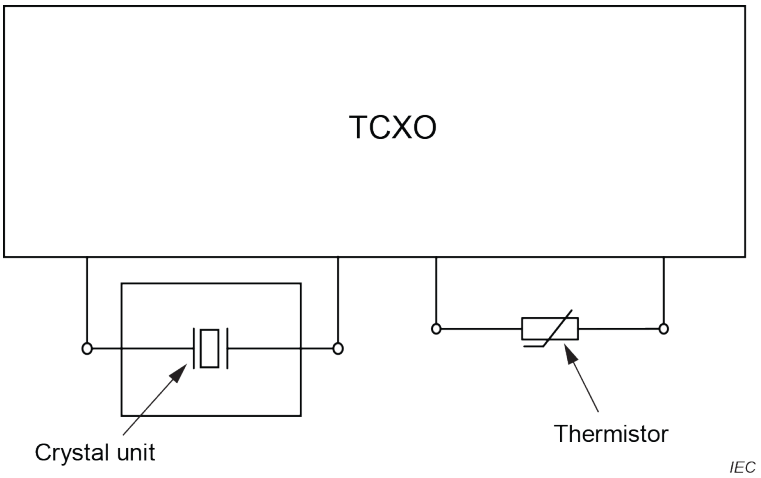

Figure A.1 – Conventional crystal oscillator with thermistor

Figure A.2 shows crystal units with thermistors on PCB.

The frequency compensation system is the same as that shown in Figure 1, but it is distinguished to use crystal units with thermistors.

In this structure, thermistors are placed near the crystal because the temperature difference between crystal blank and thermistor is small. This small difference in temperature between the crystal blank and thermistor leads to small compensated frequency stability.

Documents
Document Sharing Hub
Full document details: IEC 60122-4 2019