IEC 60139

Edition 2.0 2000-12

INTERNATIONAL STANDARD

NORME INTERNATIONALE

Preparation of outline drawings for cathode-ray tubes, their components, connections and gauges

Préparation des dessins d'encombrement des tubes à rayons cathodiques, de leurs composants, de leurs connexions et de leurs calibres

IEC 60139:2000-12(en-fr)

Documents
Document Sharing Hub

Full document details: IEC 60139 2000

THIS PUBLICATION IS COPYRIGHT PROTECTED

Copyright © 2000 IEC, Geneva, Switzerland

All rights reserved. Unless otherwise specified, no part of this publication may be reproduced or utilized in any form or by any means, electronic or mechanical, including photocopying and microfilm, without permission in writing from either IEC or IEC's member National Committee in the country of the requester. If you have any questions about IEC copyright or have an enquiry about obtaining additional rights to this publication, please contact the address below or your local IEC member National Committee for further information.

Droits de reproduction réservés. Sauf indication contraire, aucune partie de cette publication ne peut être reproduite ni utilisée sous quelque forme que ce soit et par aucun procédé, électronique ou mécanique, y compris la photocopie et les microfilms, sans l'accord écrit de l'IEC ou du Comité national de l'IEC du pays du demandeur. Si vous avez des questions sur le copyright de l'IEC ou si vous désirez obtenir des droits supplémentaires sur cette publication, utilisez les coordonnées ci-après ou contactez le Comité national de l'IEC de votre pays de résidence.

IEC Central Office
3, rue de Varembé
CH-1211 Geneva 20
Switzerland

Tel.: +41 22 919 02 11
Fax: +41 22 919 03 00
info@iec.ch
www.iec.ch

About the IEC
The International Electrotechnical Commission (IEC) is the leading global organization that prepares and publishes International Standards for all electrical, electronic and related technologies.

About IEC publications
The technical content of IEC publications is kept under constant review by the IEC. Please make sure that you have the latest edition, a corrigenda or an amendment might have been published.

IEC Catalogue - webstore.iec.ch/catalogue
The stand-alone application for consulting the entire bibliographical information on IEC International Standards, Technical Specifications, Technical Reports and other documents. Available for PC, Mac OS, Android Tablets and iPad.

IEC publications search - www.iec.ch/searchpub
The advanced search enables to find IEC publications by a variety of criteria (reference number, text, technical committee,…). It also gives information on projects, replaced and withdrawn publications.

IEC Just Published - webstore.iec.ch/justpublished
Stay up to date on all new IEC publications. Just Published details all new publications released. Available online and also once a month by email.

Electropedia - www.electropedia.org
The world's leading online dictionary of electronic and electrical terms containing more than 30 000 terms and definitions in English and French, with equivalent terms in 15 additional languages. Also known as the International Electrotechnical Vocabulary (IEV) online.

IEC Glossary - std.iec.ch/glossary
More than 60 000 electrotechnical terminology entries in English and French extracted from the Terms and Definitions clause of IEC publications issued since 2002. Some entries have been collected from earlier publications of IEC TC 37, 77, 86 and CISPR.

IEC Customer Service Centre - webstore.iec.ch/csc
If you wish to give us your feedback on this publication or need further assistance, please contact the Customer Service Centre: csc@iec.ch.

A propos de l'IEC
La Commission Electrotechnique Internationale (IEC) est la première organisation mondiale qui élabore et publie des Normes internationales pour tout ce qui a trait à l'électricité, à l'électronique et aux technologies apparentées.

A propos des publications IEC
Le contenu technique des publications IEC est constamment revu. Veuillez vous assurer que vous possédez l'édition la plus récente, un corrigendum ou amendement peut avoir été publié.

Catalogue IEC - webstore.iec.ch/catalogue
Application autonome pour consulter tous les renseignements bibliographiques sur les Normes internationales, Spécifications techniques, Rapports techniques et autres documents de l'IEC. Disponible pour PC, Mac OS, tablettes Android et iPad.

Recherche de publications IEC - www.iec.ch/searchpub

La recherche avancée permet de trouver des publications IEC en utilisant différents critères (numéro de référence, texte, comité d'études,…). Elle donne aussi des informations sur les projets et les publications remplacées ou retirées.

IEC Just Published - webstore.iec.ch/justpublished

Restez informé sur les nouvelles publications IEC. Just Published détaille les nouvelles publications parues. Disponible en ligne et aussi une fois par mois par email.

Electropedia - www.electropedia.org

Le premier dictionnaire en ligne de termes électroniques et électriques. Il contient plus de 30 000 termes et définitions en anglais et en français, ainsi que les termes équivalents dans 15 langues additionnelles. Egalement appelé Vocabulaire Electrotechnique International (IEV) en ligne.

Glossaire IEC - std.iec.ch/glossary
Plus de 60 000 entrées terminologiques électrotechniques, en anglais et en français, extraites des articles Termes et Définitions des publications IEC parues depuis 2002. Plus certaines entrées antérieures extraites des publications des CE 37, 77, 86 et CISPR de l'IEC.

Service Clients - webstore.iec.ch/csc

Si vous désirez nous donner des commentaires sur cette publication ou si vous avez des questions contactez-nous: csc@iec.ch.

Documents
Document Sharing Hub

Full document details: IEC 60139 2000

IEC 60139

Edition 2.0 2000-12

INTERNATIONAL STANDARD

NORME INTERNATIONALE

Preparation of outline drawings for cathode-ray tubes, their components, connections and gauges

Préparation des dessins d'encombrement des tubes à rayons cathodiques, de leurs composants, de leurs connexions et de leurs calibres

INTERNATIONAL
ELECTROTECHNICAL
COMMISSION

COMMISSION
ELECTROTECHNIQUE
INTERNATIONALE

ICS 31.100

ISBN 978-2-8322-3066-4

Warning! Make sure that you obtained this publication from an authorized distributor.
Attention! Veuillez vous assurer que vous avez obtenu cette publication via un distributeur agréé.

® Registered trademark of the International Electrotechnical Commission
Marque déposée de la Commission Electrotechnique Internationale

Documents
Document Sharing Hub

Full document details: IEC 60139 2000

CONTENTS

FOREWORD 4
1 Scope 6
2 Normative references 6
3 Definitions 6
3.1 Terms and definitions 6
3.2 Units and symbols 9
4 General requirements 9
4.1 Required views 9
4.2 General rules and guidelines for the outline drawings 9
5 Specific requirements 10
5.1 Specific requirements of CRT outline drawings 10
5.1.1 Front view of the CRT 10
5.1.2 Top view of the CRT 10
5.1.3 Side view of the CRT 10
5.1.4 Diagonal view of the CRT 11
5.1.5 Clearance regions for the band junctions 11
5.1.6 Mounting lugs 11
5.1.7 Clearance region for integral neck components 11
5.2 Specific requirements for glass outline drawings 11
5.2.1 CRT panel 11
5.2.2 CRT funnel 12
5.2.3 Reference line gauge 12
5.2.4 Beam clearance gauge 12
5.3 Specific requirements of CRT connection drawings 12
5.3.1 CRT base mechanical outline 13
5.3.2 CRT base connection table 13
5.3.3 CRT anode outline drawings 13

Figure 1 – Front view of the CRT 14
Figure 2 – Top gview of the CRT 15
Figure 3 – Side view of the CRT 16
Figure 4 – Diagonal view of the CRT 17
Figure 5 – Clearance regions for the band junctions 18
Figure 6 – Mounting lug detail 19
Figure 7 – Clearance region for integral neck components 20
Figure 8 – CRT panel contour defined by radii 21
Figure 9 – CRT panel contour defined by equation 22
Figure 10 – CRT funnel 23
Figure 11 – CRT funnel contour table 24
Figure 12 – Yoke reference line gauge defined by equation 25
Figure 13 – Yoke reference line gauge defined by radii 26
Figure 14 – Beam clearance gauge defined by equation 27
Figure 15 – Beam clearance gauge defined by radii 28

AVA Documents
Document Sharing Hub

Full document details: IEC 60139 2000

Figure 16 – CRT base mechanical outline 29
Figure 17 – Example of CRT base connection table 30
Figure 18 – CRT anode button 31

Documents
Document Sharing Hub

Full document details: IEC 60139 2000

INTERNATIONAL ELECTROTECHNICAL COMMISSION

PREPARATION OF OUTLINE DRAWINGS FOR CATHODE-RAY TUBES, THEIR COMPONENTS, CONNECTIONS AND GAUGES

FOREWORD

1) The IEC (International Electrotechnical Commission) is a worldwide organization for standardization comprising all national electrotechnical committees (IEC National Committees). The object of the IEC is to promote international co-operation on all questions concerning standardization in the electrical and electronic fields. To this end and in addition to other activities, the IEC publishes International Standards. Their preparation is entrusted to technical committees; any IEC National Committee interested in the subject dealt with may participate in this preparatory work. International, governmental and non-governmental organizations liaising with the IEC also participate in this preparation. The IEC collaborates closely with the International Organization for Standardization (ISO) in accordance with conditions determined by agreement between the two organizations.
2) The formal decisions or agreements of the IEC on technical matters express, as nearly as possible, an international consensus of opinion on the relevant subjects since each technical committee has representation from all interested National Committees.
3) The documents produced have the form of recommendations for international use and are published in the form of standards, technical specifications, technical reports or guides and they are accepted by the National Committees in that sense.
4) In order to promote international unification, IEC National Committees undertake to apply IEC International Standards transparently to the maximum extent possible in their national and regional standards. Any divergence between the IEC Standard and the corresponding national or regional standard shall be clearly indicated in the latter.
5) The IEC provides no marking procedure to indicate its approval and cannot be rendered responsible for any equipment declared to be in conformity with one of its standards.
6) Attention is drawn to the possibility that some of the elements of this International Standard may be the subject of patent rights. The IEC shall not be held responsible for identifying any or all such patent rights.

International Standard IEC 60139 has been prepared by IEC technical committee 39: Electronic tubes.

This second edition cancels and replaces the first edition, published in 1962, and constitutes a technical revision.

This bilingual version (2015-12) corresponds to the monolingual English version, published in 2000-12.

The text of this standard is based on the following documents:

FDIS	Report on voting
39/254/FDIS	39/256/RVD

Full information on the voting for the approval of this standard can be found in the report on voting indicated in the above table.

The French version of this standard has not been voted upon.

This publication has been drafted in accordance with the ISO/IEC Directives, Part 3.

Documents
Document Sharing Hub

Full document details: IEC 60139 2000

The committee has decided that the contents of this publication will remain unchanged until 2005. At this date, the publication will be

- reconfirmed;
- withdrawn;
- replaced by a revised edition, or
- amended.

Documents
Document Sharing Hub

Full document details: IEC 60139 2000

PREPARATION OF OUTLINE DRAWINGS FOR CATHODE-RAY TUBES, THEIR COMPONENTS, CONNECTIONS AND GAUGES

1 Scope

This International Standard gives guidance on the preparation of outline drawings of cathode-ray tubes (CRTs), tube components, tube sub-assemblies and ancillary components with the object of encouraging the same practice when publications are prepared in different countries. These recommendations are contained in the specimen drawings, descriptive text and in the tables of required dimensions.

2 Normative references

The following normative documents contain provisions which, through reference in this text, constitute provisions of this International Standard. For dated references, subsequent amendments to, or revisions of, any of these publications do not apply. However, parties to agreements based on this International Standard are encouraged to investigate the possibility of applying the most recent editions of the normative documents indicated below. For undated references, the latest edition of the normative document referred to applies. Members of IEC and ISO maintain registers of currently valid International Standards.

IEC 60027-1:1995*, Letter symbols to be used in electrical technology – Part 1: General*

IEC 60050 (all parts), *International Electrotechnical Vocabulary (IEV)*

IEC 60617 (all parts), *Graphical symbols for diagrams*

ISO 1000, *SI units and recommendations for the use of their multiples and of certain other units*

3 Definitions

3.1 Terms and definitions

For the purpose of this International Standard, the following definitions apply.

3.1.1
anode button
conductive contact which provides electrical continuity from the outside of the insulating envelope to the anode electrode inside the tube

3.1.2
axes of the CRT

3.1.2.1
principal axis
axis perpendicular to the panel and the phosphor screen which passes through the centre point of the panel, the funnel, deflection yoke region and the electron gun

Documents
Document Sharing Hub

Full document details: IEC 60139 2000

3.1.2.2
major axis
axis in the direction of the longer dimension of the CRT screen which passes through and is perpendicular to the principal axis, normally the horizontal axis

3.1.2.3
minor axis
axis along the shorter dimension of the CRT screen which passes through and is perpendicular to the principal axis, normally the vertical axis

3.1.2.4
diagonal axis
axis connecting opposite corners of the CRT screen

3.1.3
band
hardware that surrounds the CRT panel and 1) holds the mounting lugs and implosion safety hardware to the CRT, 2) applies compressive loads to the panel for mechanical safety and 3) contains the panel glass temporarily in the event of breakage

NOTE This band may be mechanically tensioned and joined at a junction; it may be joined to the CRT with resin, or it may also be a single piece that is thermally shrunk over the panel (so called shrink-fit).

3.1.4
beam clearance
clearance between the electron beam path and the flare region of the funnel connecting the CRT neck to the body of the funnel

NOTE Prevention of beam impact on the glass is critical for proper operation.

3.1.5
centre face thickness (CFT)
thickness of the panel at its centre

3.1.6
corner angle
angle between the major axis and a diagonal of the nominal screen of the design aspect ratio

3.1.7
deflection angles
angles subtended by the major axis, minor axis and diagonal dimensions of the screen as viewed from yoke reference line

3.1.8
design aspect ratio
design value of the ratio of the long to short dimensions of a rectangular area, typically expressed as a ratio of whole integers such as “4 by 3” or “16 by 9”

3.1.9
diagonal
line joining opposing corners

3.1.10
frit seal line
line formed by the frit joint between the panel and funnel

Documents
Document Sharing Hub
Full document details: IEC 60139 2000

3.1.11
heel radius
radius of the blend between the principal panel surface and the panel skirt

3.1.12
integral neck components
devices attached to the neck and/or funnel of the CRT by the manufacturer

3.1.13
lug
mounting hardware that has a blade section generally furnished with a mounting hole to receive a mounting bolt

3.1.14
magnetic shield
ferromagnetic cone, roughly the shape of the funnel, that excludes external magnetic fields from the electron beam region

3.1.15
mould-match line
line of maximum dimension of the moulded part, located at the mating plane of the two halves of a mould

3.1.16
mounting system
hardware attached to the CRT that facilitates mounting the CRT

3.1.17
projected screen dimensions
screen dimensions as they appear to a viewer outside the CRT (at infinite distance)

NOTE The dimensions are projected along optical paths from the screen surface onto a plane perpendicular to the principal CRT axis.

3.1.18
reference line
yoke reference line
fundamental plane for measurement and control of the funnel geometry

3.1.19
sagittal height
height from a plane tangential to the surface (of the panel) at its centre

3.1.20
screen diagonal
diagonal of the largest rectangle of the design aspect ratio inscribed within the screen boundary

3.1.21
useful screen dimensions
projected dimensions of the inner surface of the glass panel determined useful by the CRT glass manufacturer

3.1.22
useful phosphor screen dimensions
projected dimensions of the phosphor screen determined useful by the CRT manufacturer

Documents
Document Sharing Hub
Full document details: IEC 60139 2000

3.1.23
z-axis
axis of a CRT component or CRT gauge typically aligned with the principal axis of the CRT

3.1.24
Z-point
reference point on the external surface of the panel along the diagonal

3.2 Units and symbols

Units, graphical symbols and letter symbols should, wherever possible, be taken from the publications listed in clause 2 of this standard.

When further items are required they should be derived in accordance with the principles of these publications.

4 General requirements

This standard prescribes the outline drawing views and the dimensions and descriptions required for documenting a generic CRT design. The recommendations for each drawing are specified in 5.1, 5.2, 5.3 and specimen drawings are shown in figure 1 through figure 18.

If the phosphor screen extent is hidden by the band, the degree of vignetting should be indicated on one of the views.

4.1 Required views

In general, the views required to describe a rectangular CRT shall be the front, top, side and diagonal. When the implosion protection and mounting system is integral to the tube, a second front view and the mounting lug outline drawing may be included.

The components of the CRT (panel, funnel, base, reference line gauge, beam clearance gauge and ancillary equipment) are part of the outline drawing information.

Monochrome and projection CRTs may not require all of the entries. If the dimensions mentioned in the tabular layout below the specimen outline drawings are applicable to the tube to be described, they shall be given on the outline sheet.

If the CRT has appendages or features not described in this standard, additional views shall be included to fully describe them.

4.2 General rules and guidelines for the outline drawings

The specific guidelines for each drawing have been chosen based on balancing the amount of detail and quantity of dimensions on each drawing. If future designs require more or less detail on certain views, it is appropriate to relocate dimensional information to other views so long as the information is retained in an unambiguous manner.

The drawing shall show all dimensions necessary to assure clearances and mating with auxiliary accessories.

Drawings need not be drawn to scale, but they shall be roughly in proportion and, where necessary for clarity, an enlarged detail drawing shall be used.

Angles shall be indicated as follows:

Documents
Document Sharing Hub
Full document details: IEC 60139 2000

a) by quoting the value in degrees and minutes and seconds or in decimal notation. Where this is not practical, the value may be quoted in fractions of degrees;

b) where it is self-evident that a number of angles are of equal value, the value of only one of those angles shall be quoted.

5 Specific requirements

5.1 Specific requirements of CRT outline drawings

The following views and related dimensions shall be included where appropriate. Where it is possible to combine this data into fewer views, this is permissible. Where additional types of dimensions are deemed useful, they may be included.

Each of the following subclauses identifies the suggested data for a drawing. Data can be shown on other drawings if it is more convenient.

5.1.1 Front view of the CRT

The front view shall provide values for the following list of dimensions, as shown in figure 1:

- dimension of the CRT including mounting system;
- clearance for the band junction when positioned on the minor or major axis;
- distances between the centres of the CRT mounting holes;
- design aspect ratio;
- dimensions of the minimum, nominal and maximum useful phosphor screen;
- curvature of the useful phosphor (if not straight);
- location of the “Z-point”;
- electron gun positions (designated R, G, B);
- clock position of the anode connector.

5.1.2 Top view of the CRT

The top (or bottom) view shall show the anode connector and provide values for the following list of dimensions, as shown in figure 2:

- neck outside diameter;
- location for the convergence device;
- area for reliable contact to the outer conductive coating;
- major axis dimensions of the band;
- base and anode connector type designations.

5.1.3 Side view of the CRT

The side view shall provide values for the following list of dimensions, as shown in figure 3:

- overall length of the CRT;
- reference line location;
- frit seal line location;
- anode contact location;
- description of the implosion system (i.e. tension band, shrink fit, etc.).

Documents
Document Sharing Hub

Full document details: IEC 60139 2000

5.1.4 Diagonal view of the CRT

The diagonal view shall provide values for the following list of dimensions, as shown in figure 4:

- reference line gauge designation;
- sagittal height of panel at the “Z-point”;
- location of the mounting lug;
- location of the band;
- maximum dimension of the CRT forward of the mounting lug.

5.1.5 Clearance regions for the band junctions

The clearance regions for the band junction view shall provide values for the following list of dimensions, as shown in figure 5:

- tube dimensions including band but not junction;
- tube dimensions including junction;
- location of the junction.

5.1.6 Mounting lugs

The mounting lug view shall provide an adequate description of the mounting lug for interfacing to the cabinet. The drawing is for illustration purposes only and the choice of the best dimensions to indicate the shape of the blade and foot of the mounting lug is left to the registrant. The drawing shall include the following items, as shown in figure 6:

- diameter of the mounting lug hole;
- thickness of the mounting lug;
- outline.

5.1.7 Clearance region for integral neck components

A view of the clearance regions for tubes having integral neck components shall provide definition of the extent of such components. The drawing, figure 7, is for illustration purposes only and the choice of the best dimensions to indicate this clearance space is left to the registrant.

5.2 Specific requirements for glass outline drawings

The glass parts and their gauges shall be shown in adequate detail to show the outside surface of the finished CRT.

5.2.1 CRT panel

The outline drawing of the panel shall provide values for the following list of dimensions:

- dimensions of the panel along the axes at the mould match line;
- centre face thickness;
- overall height of the panel;
- angle to the corner of the panel from the major axis;
- dimensions of the minimum useful screen outline;
- inside and outside panel contours (by blended radii or equations).

Documents
Document Sharing Hub

Full document details: IEC 60139 2000

Two specimen drawings are shown, figure 8 for the contour defined by the blended radii method and figure 9 for the contour defined by the equation method.

5.2.2 CRT funnel

The outline drawing of the funnel shall provide values for the following list of dimensions:

- dimensions of the funnel along the axes at the mould match line;
- neck diameter;
- anode button type designation;
- location of the anode button;
- location of the reference line from the seal edge;
- angle from the major axis to the corner of the funnel;
- corner radius;
- outside contour.

Two specimen drawings are shown, figure 10 for the general dimensions and figure 11 for the contour definition table.

5.2.3 Reference line gauge

The outline drawing for a reference line gauge shall provide values for the following list of dimensions:

- gauge diameters;
- gauge heights;
- contour definition (by blended radii or by equation).

Two specimen drawings are shown, figure 12 using the equation method and figure 13 for the blended radii method.

5.2.4 Beam clearance gauge

The outline drawing for a beam clearance gauge shall provide values for the following list of dimensions:

- gauge diameters;
- gauge heights;
- contour definition (by blended radii or by equation).

Two specimen drawings are shown, figure 14 for the surface defined by the equation method and figure 15 for the surface defined by the blended radii method.

5.3 Specific requirements of CRT connection drawings

The CRT base has a high degree of variability in non-critical dimensions. Drawings are expected to be variable and figures 16 and 17 are for illustration. The anode contact geometry may be variable. The outline drawings should provide information as to the metal contact and its surrounding glass contours.

Documents
Document Sharing Hub
Full document details: IEC 60139 2000

5.3.1 CRT base mechanical outline

The CRT base mechanical outline shall provide values for the following list of dimensions, as illustrated in figure 16:

- pin circle diameter;
- pin diameters;
- pin length;
- pin 1 position with respect to the major axis of the CRT;
- critical details of guide surfaces, keyways, fillets, silos, etc.

5.3.2 CRT base connection table

The CRT base connection table shall indicate the electron gun electrode connected to each base pin, as illustrated in figure 17.

5.3.3 CRT anode outline drawings

The anode contact views shall indicate the dimensional features of the anode connector adequately to permit design of the mating connector, as shown in figure 18.

Documents
Document Sharing Hub

Full document details: IEC 60139 2000

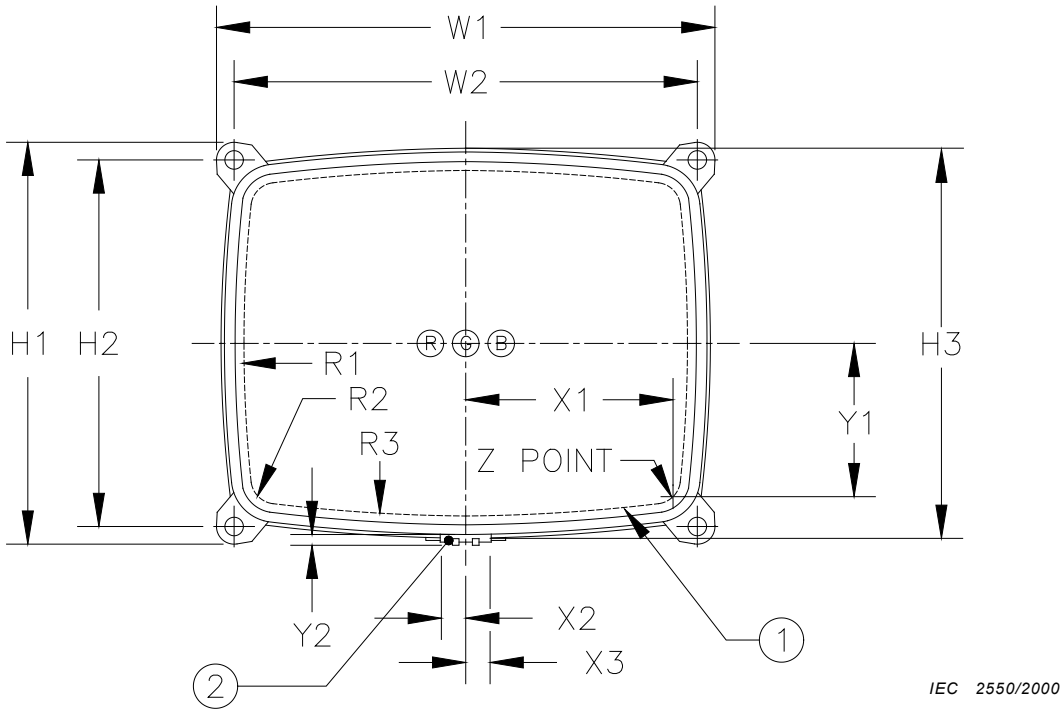

Key

1 Useful phosphor screen outline; diagonal (D), width (W) and height (H)

2 Clearance region for band junction

Designation	Description	Dimension type
W1	Width of the CRT including mounting system	Max.
H1	Height of the CRT including mounting system	Max.
H3	Height including band but excluding junction	Max.
W2	Width of the centres of the CRT mounting lug holes	Nom.
H2	Height of the centres of the CRT mounting lug holes	Nom.
D	Useful phosphor screen diagonal	Min., Nom., Max.
W	Useful phosphor screen width	Min., Nom., Max.
H	Useful phosphor screen height	Min., Nom., Max.
X1	Major axis coordinate of the “Z-point”	Nom.
Y1	Minor axis coordinate of the “Z-point”	Nom.
R1	Side radius of the useful screen edge (if not straight)	Nom.
R2	Corner radius of the useful screen edge (if not straight)	Nom.
R3	Bottom radius of the useful screen edge (if not straight)	Nom.
Clearance for band junction (see 5.1.5 and figure 5 for alternate configuration)		
X2	Lateral extent left of centre	Max.
X3	Lateral extent right of centre	Max.
Y2	Thickness	Max.
R,G,B	Electron gun sequence (left-to-right order)	
Design aspect ratio		
	Design aspect ratio of the useful phosphor screen (W:H)	Nom.

Figure 1 – Front view of the CRT

Documents
Document Sharing Hub
Full document details: IEC 60139 2000

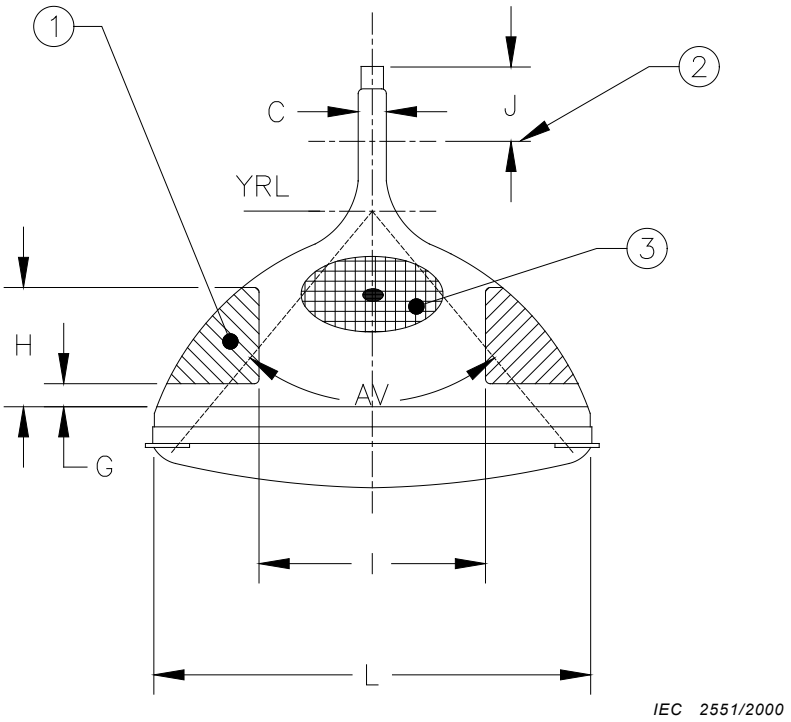

Key

1 Contact area of external conductive coating

2 Plane of beam correction device

3 Insulating coating

Designation	Description	Dimension type
C	Neck outside diameter	Tol.
J	Distance from the plane for locating the beam correction device to end of base	Nom.
Contact area of external conductive coating		
G	Seal line to nearest edge	Max.
H	Seal line to farthest edge	Tol.
I	Opening for anode contact	Max.
Major axis dimensions of the band (excluding clearance for the junction)		
L	Width at the panel mould-match line including the band	Max.
Connector type designation		
	Base type designation	
	Anode type designation	
Deflection angle		
AV	Major axis deflection angle	Nom.

Figure 2 – Top gview of the CRT

Documents
Document Sharing Hub
Full document details: IEC 60139 2000

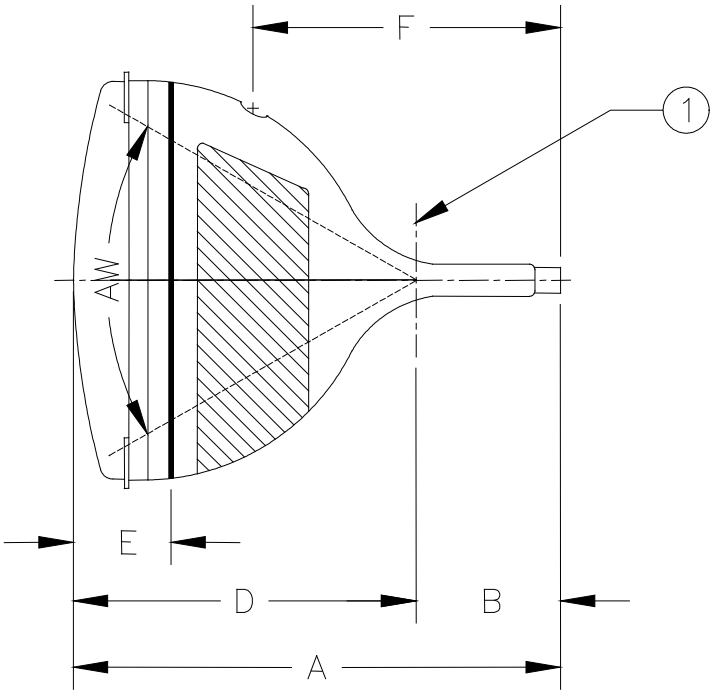

Key *IEC 2552/2000*

1 Yoke reference line

Designation	Description	Dimension type
A	Overall length	Min., Max.
B	Reference line from end of base	Nom.
D	Centre face to reference line	Nom.
E	Centre of face to frit seal line	Nom.
F	Anode contact to end of base	Nom.
Text	Description of the implosion system	
AW	Minor axis deflection angle	Nom.

Figure 3 – Side view of the CRT

Documents
Document Sharing Hub
Full document details: IEC 60139 2000

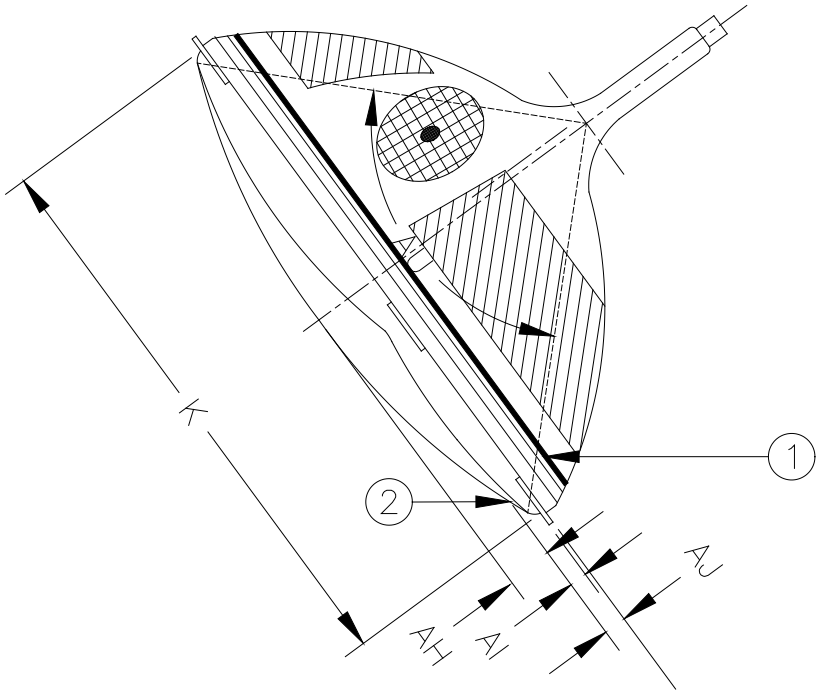

IEC 2553/2000

Key

1 Seal line

2 Z-point

Designation	Description	Dimension type
	Reference line gauge designation	
Sagittal height at minimum screen diagonal and lug location		
AH	Projected distance from centre of face to Z-point along the tube axis	Nom.
AI	Z-point to front of lug	Tol.
AJ	Z-point to front edge of band	Min.
Dimension at the mould match line including hardware forward of the mounting lug plane		
K	Diagonal axis	Max.
AU	Diagonal deflection angle	Nom.

Figure 4 – Diagonal view of the CRT

Documents
Document Sharing Hub
Full document details: IEC 60139 2000

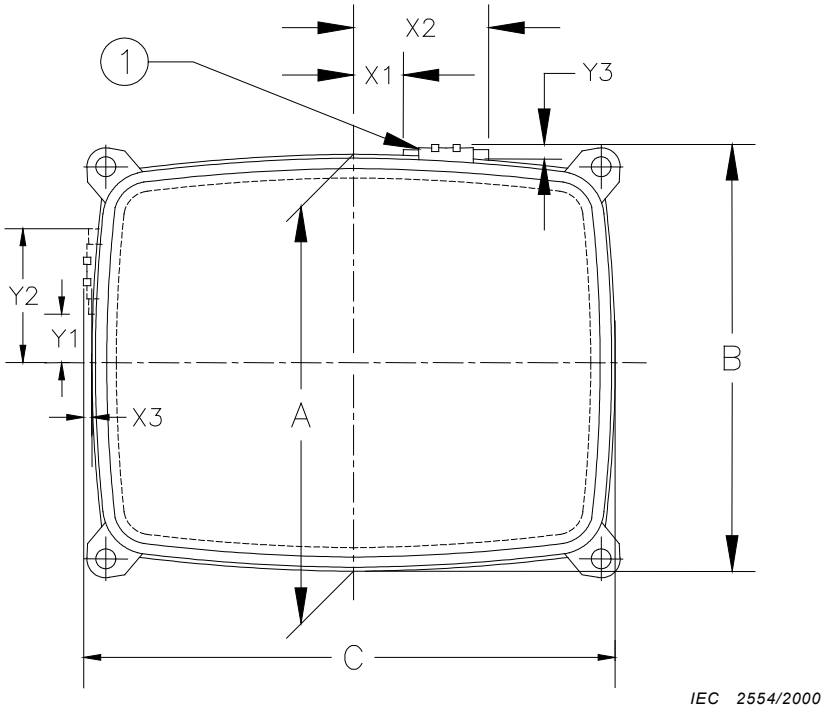

Key

1 Clearance for band junction

Designation	Description	Dimension type
A	Height of tube including band but not junction	Max.
Case of top or bottom junction mounting		
X1	Axis to nearest edge	Min.
X2	Axis to farthest edge	Max.
Y3	Thickness	Max.
B	Height of tube including band junctions	Max.
Case of left or right junction mounting		
Y1	Axis to nearest edge	Min.
Y2	Axis to farthest edge	Max.
X3	Thickness	Max.
C	Width of tube including band junction	Max.

Figure 5 – Clearance regions for the band junctions

Documents
Document Sharing Hub
Full document details: IEC 60139 2000