IEC 60156

Edition 4.0 2025-01
REDLINE VERSION

INTERNATIONAL STANDARD

Insulating liquids – Determination of the breakdown voltage at power frequency – Test method

IEC 60156:2025-01 RLV(en)

Documents
Document Sharing Hub

Full document details: IEC 60156 2025 RLV

THIS PUBLICATION IS COPYRIGHT PROTECTED
Copyright © 2025 IEC, Geneva, Switzerland

All rights reserved. Unless otherwise specified, no part of this publication may be reproduced or utilized in any form or by any means, electronic or mechanical, including photocopying and microfilm, without permission in writing from either IEC or IEC's member National Committee in the country of the requester. If you have any questions about IEC copyright or have an enquiry about obtaining additional rights to this publication, please contact the address below or your local IEC member National Committee for further information.

IEC Secretariat
3, rue de Varembé
CH-1211 Geneva 20
Switzerland

Tel.: +41 22 919 02 11
info@iec.ch
www.iec.ch

About the IEC
The International Electrotechnical Commission (IEC) is the leading global organization that prepares and publishes International Standards for all electrical, electronic and related technologies.

About IEC publications
The technical content of IEC publications is kept under constant review by the IEC. Please make sure that you have the latest edition, a corrigendum or an amendment might have been published.

IEC publications search - webstore.iec.ch/advsearchform
The advanced search enables to find IEC publications by a variety of criteria (reference number, text, technical committee, …). It also gives information on projects, replaced and withdrawn publications.

IEC Just Published - webstore.iec.ch/justpublished
Stay up to date on all new IEC publications. Just Published details all new publications released. Available online and once a month by email.

IEC Customer Service Centre - webstore.iec.ch/csc
If you wish to give us your feedback on this publication or need further assistance, please contact the Customer Service Centre: sales@iec.ch.

IEC Products & Services Portal - products.iec.ch
Discover our powerful search engine and read freely all the publications previews, graphical symbols and the glossary. With a subscription you will always have access to up to date content tailored to your needs.

Electropedia - www.electropedia.org
The world's leading online dictionary on electrotechnology, containing more than 22 500 terminological entries in English and French, with equivalent terms in 25 additional languages. Also known as the International Electrotechnical Vocabulary (IEV) online.

Documents
Document Sharing Hub

Full document details: IEC 60156 2025 RLV

IEC 60156

Edition 4.0 2025-01
REDLINE VERSION

INTERNATIONAL STANDARD

Insulating liquids – Determination of the breakdown voltage at power frequency – Test method

INTERNATIONAL
ELECTROTECHNICAL
COMMISSION

ICS 29.040

ISBN 978-2-8327-0194-2

Warning! Make sure that you obtained this publication from an authorized distributor.

® Registered trademark of the International Electrotechnical Commission

Documents
Document Sharing Hub

Full document details: IEC 60156 2025 RLV

CONTENTS

FOREWORD 4
INTRODUCTION 2
1 Scope 7
2 Normative references 7
3 Terms and definitions 7
4 Electrical apparatus 7
4.1 General 7
4.2 Voltage regulator 7
4.3 Step-up transformer 8
4.4 Switching system 8
4.5 Current-limiting resistors 8
4.6 Measuring system 8
5 Test assembly 8
5.1 General 8
5.2 Test cell 9
5.3 Electrodes 9
5.4 Stirring device 10
6 Preparation of electrodes 11
7 Test assembly preparation 11
8 Sampling 11
9 Test procedure 11
9.1 Sample preparation 11
9.2 Filling of the cell 12
9.3 Application of the voltage 12
10 Report 12
11 Test data dispersion and reproducibility 13
11.1 Test data dispersion 13
11.2 Reproducibility 13
Annex A (informative) Improved test method 14
A.1 Test procedure for improved test method 14
A.2 Report 15
Annex B (informative) Special test method for low volume samples 16
Annex C (informative) Representative material for a performance test 18
Bibliography 19

Figure 1 – Example of test cell with spherical electrodes 12,5 mm to 13,0 mm diameter 9
Figure 2 – Example of test cell with partially hemispherical electrodes with 25 mm radius and 36 mm diameter 10
Figure 3 – Graphical representation of coefficient of variation versus mean breakdown voltage 13
Figure A.1 – Example of a sequence of breakdown shots for determination of the breakdown voltage 15
~~Figure B.1 – Example of low volume test cell, fixed electrode distance of 2 mm with 2 ml active volume under dielectric stress ....~~

Documents
Document Sharing Hub
Full document details: IEC 60156 2025 RLV

~~Figure B.2 – Example of low volume test cell, fixed electrode distance of 2,5 mm (150 ml to 200 ml)~~

Documents
Document Sharing Hub

Full document details: IEC 60156 2025 RLV

INTERNATIONAL ELECTROTECHNICAL COMMISSION

INSULATING LIQUIDS – DETERMINATION OF THE BREAKDOWN VOLTAGE AT POWER FREQUENCY – TEST METHOD

FOREWORD

1) The International Electrotechnical Commission (IEC) is a worldwide organization for standardization comprising all national electrotechnical committees (IEC National Committees). The object of IEC is to promote international co-operation on all questions concerning standardization in the electrical and electronic fields. To this end and in addition to other activities, IEC publishes International Standards, Technical Specifications, Technical Reports, Publicly Available Specifications (PAS) and Guides (hereafter referred to as "IEC Publication(s)"). Their preparation is entrusted to technical committees; any IEC National Committee interested in the subject dealt with may participate in this preparatory work. International, governmental and non-governmental organizations liaising with the IEC also participate in this preparation. IEC collaborates closely with the International Organization for Standardization (ISO) in accordance with conditions determined by agreement between the two organizations.
2) The formal decisions or agreements of IEC on technical matters express, as nearly as possible, an international consensus of opinion on the relevant subjects since each technical committee has representation from all interested IEC National Committees.
3) IEC Publications have the form of recommendations for international use and are accepted by IEC National Committees in that sense. While all reasonable efforts are made to ensure that the technical content of IEC Publications is accurate, IEC cannot be held responsible for the way in which they are used or for any misinterpretation by any end user.
4) In order to promote international uniformity, IEC National Committees undertake to apply IEC Publications transparently to the maximum extent possible in their national and regional publications. Any divergence between any IEC Publication and the corresponding national or regional publication shall be clearly indicated in the latter.
5) IEC itself does not provide any attestation of conformity. Independent certification bodies provide conformity assessment services and, in some areas, access to IEC marks of conformity. IEC is not responsible for any services carried out by independent certification bodies.
6) All users should ensure that they have the latest edition of this publication.
7) No liability shall attach to IEC or its directors, employees, servants or agents including individual experts and members of its technical committees and IEC National Committees for any personal injury, property damage or other damage of any nature whatsoever, whether direct or indirect, or for costs (including legal fees) and expenses arising out of the publication, use of, or reliance upon, this IEC Publication or any other IEC Publications.
8) Attention is drawn to the Normative references cited in this publication. Use of the referenced publications is indispensable for the correct application of this publication.
9) IEC draws attention to the possibility that the implementation of this document may involve the use of (a) patent(s). IEC takes no position concerning the evidence, validity or applicability of any claimed patent rights in respect thereof. As of the date of publication of this document, IEC had not received notice of (a) patent(s), which may be required to implement this document. However, implementers are cautioned that this may not represent the latest information, which may be obtained from the patent database available at https://patents.iec.ch. IEC shall not be held responsible for identifying any or all such patent rights.

This redline version of the official IEC Standard allows the user to identify the changes made to the previous edition IEC 60156:2018. A vertical bar appears in the margin wherever a change has been made. Additions are in green text, deletions are in strikethrough red text.

Documents
Document Sharing Hub

Full document details: IEC 60156 2025 RLV

IEC 60156 has been prepared by IEC technical committee 10: Fluids for electrotechnical applications. It is an International Standard.

This fourth edition cancels and replaces the third edition published in 2018. This edition constitutes a technical revision.

This edition constitutes a technical revision and, mainly, confirms the content of the previous edition even if some advances are included. The test method has not been changed for practical reasons, due to the very large number of instrumentations disseminated around the world.

The text of this International Standard is based on the following documents:

Draft	Report on voting
10/1241/FDIS	10/1256/RVD

Full information on the voting for its approval can be found in the report on voting indicated in the above table.

The language used for the development of this International Standard is English.

This document was drafted in accordance with ISO/IEC Directives, Part 2, and developed in accordance with ISO/IEC Directives, Part 1 and ISO/IEC Directives, IEC Supplement, available at www.iec.ch/members_experts/refdocs. The main document types developed by IEC are described in greater detail at www.iec.ch/publications.

The committee has decided that the contents of this document will remain unchanged until the stability date indicated on the IEC website under webstore.iec.ch in the data related to the specific document. At this date, the document will be

- reconfirmed,
- withdrawn, or
- revised.

Documents
Document Sharing Hub

Full document details: IEC 60156 2025 RLV

INTRODUCTION

As normally applied, breakdown voltage of insulating liquids is not a basic material property but an empirical test procedure intended to indicate the presence of contaminants such as water and solid suspended matter and the advisability of carrying out drying and filtration treatment.

The AC breakdown voltage value of insulating liquids strongly depends on the particular set of conditions used in its measurement. Therefore, standardized testing procedures and equipment are essential for the unambiguous interpretation of test results.

The method described in this document applies to either acceptance tests on new deliveries of insulating liquids or testing of treated liquids prior to or during filling into electrical equipment, or to the monitoring and maintenance of ~~oil-filled~~ insulating liquid-filled apparatus in service. It specifies rigorous sample-handling procedures and temperature control that should be adhered to when certified results are required. For routine tests, especially in the field, less stringent procedures may be practicable, and it is the responsibility of the user to determine their effect on the results.

Annex A describes, for comparison, an alternative test method which could be introduced in the future. Annex B describes special test methods, using cells which may include low volume samples. Annex C describes a reference material for a performance test and check according to IEC 60060-3 [1][1].

[1] Numbers in square brackets refer to the Bibliography.

Documents
Document Sharing Hub
Full document details: IEC 60156 2025 RLV

INSULATING LIQUIDS – DETERMINATION OF THE BREAKDOWN VOLTAGE AT POWER FREQUENCY – TEST METHOD

1 Scope

This document specifies the method for determining the dielectric breakdown voltage of insulating liquids at power frequency. The test procedure is performed in a specified apparatus, where the oil sample is subjected to an increasing AC electrical field until breakdown occurs. The method applies to all types of insulating liquids of nominal viscosity up to 350 mm^2/s at 40 °C. It is appropriate both for acceptance testing on unused liquids at the time of their delivery and for establishing the condition of samples taken in monitoring and maintenance of equipment.

2 Normative references

The following documents are referred to in the text in such a way that some or all of their content constitutes requirements of this document. For dated references, only the edition cited applies. For undated references, the latest edition of the referenced document (including any amendments) applies.

IEC 60475, *Method of sampling insulating liquids*

3 Terms and definitions

No terms and definitions are listed in this document.

ISO and IEC maintain terminology databases for use in standardization at the following addresses:

- IEC Electropedia: available at https://www.electropedia.org/
- ISO Online browsing platform: available at https://www.iso.org/obp

4 Electrical apparatus

4.1 General

The electrical apparatus consists of the following units:

1) voltage regulator,
2) step-up transformer,
3) switching system,
4) current-limiting resistors,
5) measuring device.

Two or more of these units may be integrated in any equipment system.

4.2 Voltage regulator

The test voltage shall be increased with an automatic control of the required uniform voltage rate of rise. The device should not introduce harmonics disturbances (< 3 %) and the AC source should be free from harmonics.

AVA Documents
Document Sharing Hub

Full document details: IEC 60156 2025 RLV

4.3 Step-up transformer

The test voltage is obtained by using a step-up or resonant transformer supplied from an AC source using 48 Hz to 62 Hz (sinusoidal waveform). The voltage source value is constantly increased. The controls of the variable low-voltage source shall be capable of varying the test voltage smoothly, uniformly and without overshoots or transients. Incremental increases (produced, for example, by a variable auto-transformer or an amplifier) shall not exceed 2 % of the expected breakdown voltage.

The centre-point of the secondary winding of the transformer should be connected to earth.

4.4 Switching system

The circuit shall be opened automatically if a sustained arc between the electrodes occurs and the voltage between the electrodes collapses ~~to a voltage less than 500 V~~.

NOTE Typically, voltage collapse is detected in the range of 500 V.

The primary circuit of the step-up transformer shall be fitted with a circuit-breaker operated by the current sensing device, resulting from the breakdown of the sample and shall break the voltage within 10 ms.

The sensitivity of the current or voltage sensing element depends on the energy-limiting device employed and only approximate guidance can be given.

A cut-off time of < 100 µs, as given in the previous edition of this document, is ~~needed~~ necessary to perform multiple breakdowns on silicone liquids.

4.5 Current-limiting resistors

To protect the equipment and to avoid excessive decomposition at the instant of breakdown of liquids, such as silicone or ester liquids, a resistance limiting the breakdown current shall be inserted in series with the test cell.

The short-circuit current of the transformer and associated circuits shall be within the range of 10 mA to 25 mA for all voltages higher than 15 kV. This may be achieved by a combination of resistors in either or both the primary and secondary circuits of the high-voltage transformer.

4.6 Measuring system

For the purpose of this document, the magnitude of the test voltage is defined as its peak value divided by $\sqrt{2}$.

The output voltage of the step-up transformer may be measured by means of a measuring system consisting of a voltage divider or a measuring winding of the step-up transformer coupled with a peak-voltmeter. The measuring system shall be calibrated up to the upper scale voltage to be measured. A method of calibration which has been found satisfactory is the use of a transfer standard. This is an auxiliary measuring device which is connected in place of the test cell between the high-voltage terminals to which it presents an impedance similar to the one of the sample liquids. The auxiliary device is separately calibrated against a primary standard [2], [3].

5 Test assembly

5.1 General

The breakdown voltage test is performed following the method described herewith as a routine test.

Documents
Document Sharing Hub
Full document details: IEC 60156 2025 RLV

5.2 Test cell

The volume of the cell shall be between 350 ml and 600 ml.

The cell shall be made from electrically insulating materials that are not hygroscopic. The cell shall be transparent and chemically inert, resistant to the insulating liquid and to the cleaning agent that shall be used. ~~A glass cell is the preferred option.~~ Whilst glass is a commonly used material, other suitable materials such as plastics or polymers are appropriate, provided they have high chemical resistance to the insulating liquids (including mineral oils, ester liquids, etc.).

The cell shall be provided with a cover and shall be designed to permit easy removal of the electrodes for cleaning and maintenance. To improve homogenization of the test liquid, a rounded bottom shape of the cell is recommended. Containers and covers shall be cleaned by washing with a suitable solvent or clean insulating liquid to remove residues of an earlier sample. After cleaning, containers shall be immediately capped and kept closed until used again. Electrodes shall be stored in clean insulating liquids.

NOTE 1 It is preferable, in the case of esters to use a similar liquid to store the electrodes.

Different shapes of electrodes give different results. The partially hemispherical electrode shall be used, unless otherwise stated.

NOTE 2 If the difference in the shape of electrodes is minimal, the results difference is also minimal.

Examples of suitable cell designs are given in Figure 1 and Figure 2.

Dimensions in millimetres

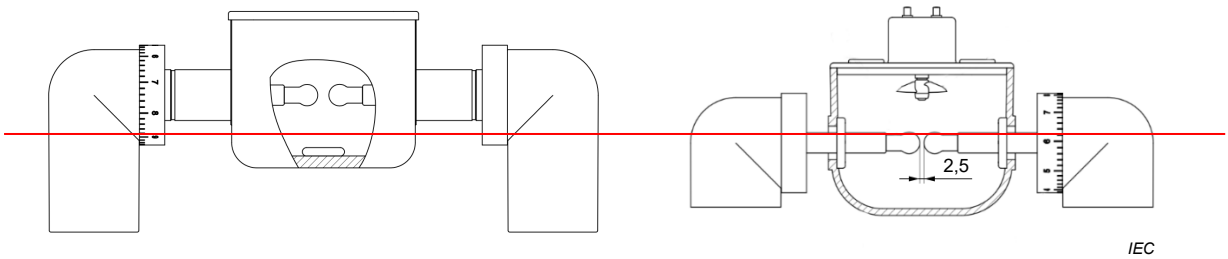

~~NOTE The stirring device can be mounted on the top (right side figure) or on the bottom (left side figure). The stirring device position and Vernier shifter are reported only as reference.~~

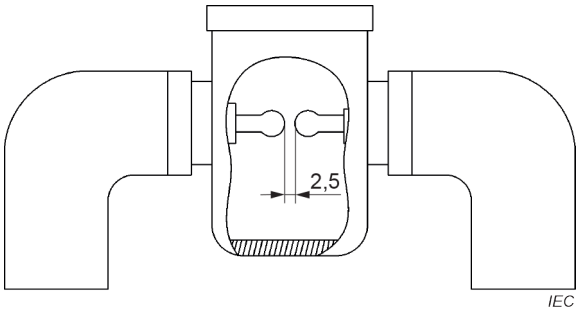

NOTE The stirring device can be mounted on the top or on the bottom.

Figure 1 – Example of test cell with spherical electrodes 12,5 mm to 13,0 mm diameter

Documents
Document Sharing Hub
Full document details: IEC 60156 2025 RLV

Dimensions in millimetres

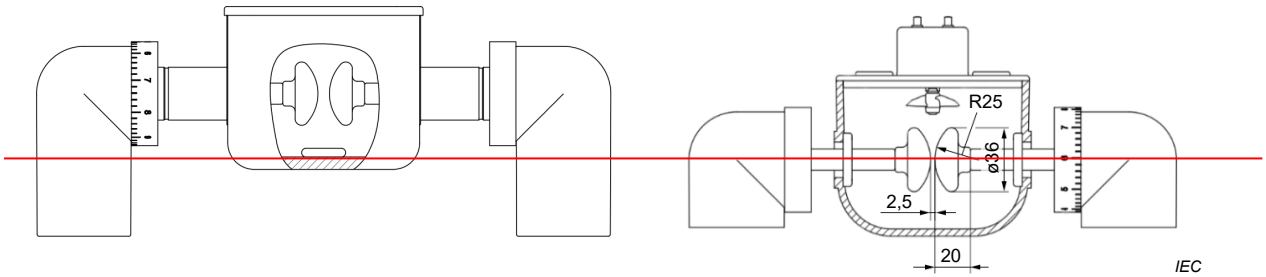

~~NOTE The stirring device can be mounted on the top (right side figure) or on the bottom (left side figure). The stirring device position and Vernier shifter are reported only as reference.~~

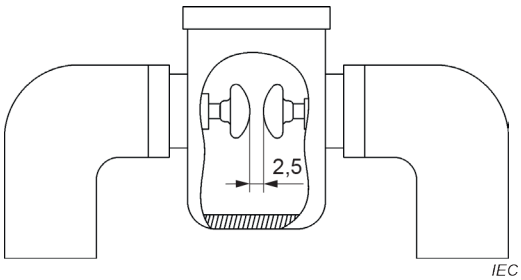

NOTE The stirring device can be mounted on the top or on the bottom.

Figure 2 – Example of test cell with partially hemispherical electrodes with 25 mm radius and 36 mm diameter

5.3 Electrodes

The electrodes shall be made either of brass, bronze or austenitic stainless steel. They shall be polished and, in shape, either spherical (12,5 mm to 13,0 mm diameter) as shown in Figure 1 or in partially hemispherical shape (25 mm ± 0,25 mm radius) as shown in Figure 2. The axis of the electrode system shall be horizontal and shall be at least 40 mm below the surface of the test liquid. No part of the cell or stirrer shall influence the electric field between the electrodes. The gap between the electrodes shall be 2,50 mm ± 0,05 mm.

The electrodes shall be examined frequently for pitting or other damage and shall be maintained or replaced as soon as such damage is observed.

NOTE The electrodes can be replaced or refurbished typically after 5 000 single breakdowns. The surface of the electrodes can be polished with a maximum grain diameter of 10 µm. The limit of the arithmetical mean deviation of the roughness profile of the electrodes can be Ra ~~≤~~ = < 0,5 µm, according to ~~ISO 4287~~ ISO 21290-2 [4].

5.4 Stirring device

The use of an automatic stirring device is recommended, to be used at all times during the test.

The stirrer shall be mounted in the test cell ~~in order to maximize the homogenization of the liquid~~. It shall be designed so that it is easily cleaned. Stirring shall be achieved by means of a two-bladed or appropriate stirrer of effective diameter 25 mm to 35 mm, axial depth 5 mm to 10 mm, rotating at a speed of 200 r/min to 300 r/min. The stirrer shall not produce air bubbles. It shall be fully immersed in the liquid sample. ~~Examples of stirring systems mounted in test cells are reported in Figures 1 and 2.~~

NOTE 1 To avoid bubbles between the electrodes, the stirrer can rotate preferably in such a direction that bubbles can be removed [5].

NOTE 2 The stirring device can be mounted on the top or on the bottom. ~~In Figures 1 and 2, the stirring device position is reported only as reference.~~

AVA Documents Document Sharing Hub

NOTE 3 ~~A magnetic stirring device can be also used.~~ Stirring by means of a magnetic bar (20 mm to 25 mm in length and 5 mm to 10 mm in diameter) is an acceptable solution, taking into consideration the collecting of magnetic particles from the fluid on the magnetic bar.

6 Preparation of electrodes

New electrodes shall be cleaned and fulfil the requirements of 5.3. Preparation of the electrodes shall follow the following procedure:

– clean all surfaces with a suitable volatile solvent and allow the solvent to evaporate;
– polish with fine abrasive powder (for example, jeweller's rouge) or abrasive paper or cloth, for example crocus cloth (see 5.3);
– after polishing, clean with petroleum spirit (reagent quality: boiling range of about 40 °C to 80 °C) followed by acetone (reagent quality);
– assemble the electrodes in the cell, fill with a clean, unused insulating liquid of the type to be tested;
– before the first breakdown test, raise the voltage until breakdown 24 times.

This procedure shall be repeated after each cleaning or change of electrodes.

7 Test assembly preparation

It is recommended that a separate test cell assembly be reserved for different insulating liquid types.

Test assemblies shall be stored in a dry place, covered and filled with dry insulating liquid of the type in regular use in the cell.

On change of the type of liquid under test, remove all residues of the previous liquid with an appropriate solvent, rinse the assembly with a clean, dry liquid of the same type as the one to be tested, drain and refill.

8 Sampling

Sampling shall be carried out in accordance with IEC 60475.

NOTE Breakdown voltage is extremely sensitive to the slightest contamination of the sample by water and particulate matter. Special precautions can be implemented to avoid contamination of the sample and the need for trained personnel and experienced supervision. The sample is taken where the liquid is likely to be most contaminated, usually at the lowest point of the container holding it, unless otherwise specified.

The test is carried out on the sample as received without drying or degassing, unless otherwise specified.

9 Test procedure

9.1 Sample preparation

Immediately before filling the test cell, the sample container is gently agitated and turned over several times in such a way as to ensure, as far as possible, a homogeneous distribution of the impurities contained in the liquid without causing the formation of air bubbles.

A possible method is an automatic rotation of the sample container horizontally for 1 min with a recommended speed of 30 r/min.

Documents
Document Sharing Hub
Full document details: IEC 60156 2025 RLV

Equilibrate the sample to room temperature. Unnecessary exposure to the ambient air of the sample shall be avoided. The sample liquid is exposed to ambient air only during pouring from the sampling vessel to the test cell.

9.2 Filling of the cell

Immediately before commencing the test, drain the test cell and rinse the walls, electrodes and other component parts, with the test liquid. Drain and slowly fill with the test liquid avoiding the formation of air bubbles.

Measure and record the temperature of the liquid.

Close the test cell directly after filling.

9.3 Application of the voltage

At the time of test, the temperatures shall be maintained at room temperature (~~20~~22 °C ± 5 °C).

~~Adjust the electrode gap distance to 2,5 mm ± 0,05 mm with a vernier or other system and start the stirrer. The stirrer, if used, shall run continuously throughout the test.~~

~~Metallic gauges can damage the surface of the electrodes; hence, they have to be avoided.~~

Adjust the electrode gap distance to 2,5 mm ± 0,05 mm using an adjustment device and start the stirrer. If the gauge is used to verify the gap distance, it must be ensured that no damage to the electrodes surface is introduced.

The first application of voltage is started approximately 5 min after completion of filling and checking that no air bubbles are visible in the electrode gap.

The stirrer, if used, shall run continuously throughout the test.

Apply voltage to the electrodes and uniformly increase voltage from zero at the rate of 2,0 kV/s ± 0,2 kV/s until breakdown occurs.

The breakdown voltage is the maximum voltage reached at the time the circuit is opened either automatically (established arc) or manually (visible or audible discharge detected).

Record the value in kV (kilovolts).

Carry out six breakdowns on the same cell filling, allowing a pause of at least 2 min after each breakdown before re-application of voltage. Check that no gas bubbles are present within the electrode gap.

Calculate the mean value of the six breakdowns, standard deviation and related coefficient of variation (ratio between standard deviation and mean breakdown voltage).

For insulating liquids having a nominal kinematic viscosity higher than 15 mm^2/s (40 °C), the resting time before application of the voltage shall be increased in the range of 15 min to ~~30~~ 60 min. In addition, the resting time between two consecutive shots shall ~~also~~ be increased ~~accordingly~~ to 6 min.

10 Report

The report shall include:

– sample identification, possibly including the type of insulating liquids;

Documents
Document Sharing Hub
Full document details: IEC 60156 2025 RLV

– value of each individual breakdown in kV (kilovolts).
– mean breakdown value;
– ~~type~~shape of electrodes used;
– temperature of the liquid (in the test cell);
– coefficient of variation (%).

Other optional information includes:

– frequency of the test voltage (optional);
– stirring arrangement (optional).

In the case where the individual breakdown voltage is above the maximum equipment voltage capability, the result shall be reported as greater than the maximum voltage capability (example: > 80 kV).

11 Test data dispersion and reproducibility

11.1 Test data dispersion

The graphical representation of Figure 3 indicates the values of the coefficient of variation and its mean value which have been found in a large body of test data in several laboratories using transformer liquids. The solid line in the graph shows the distribution of the coefficient of variation as a function of the mean breakdown value. The dotted lines indicate the expected 2,5 % (0,025) to 97,5 % (0,975) range of values of coefficient of variation (i.e. relative standard deviation (SD) divided by mean, expressed in percentage) as a function of the value of the mean.

Typical coefficients of variation reported in Figure 3 are for information only and do not represent an acceptance criterion of the obtained results.

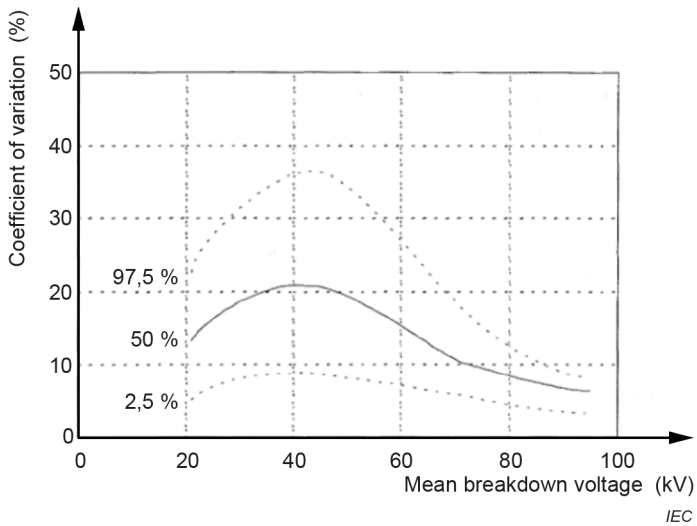

Figure 3 – Graphical representation of coefficient of variation versus mean breakdown voltage

11.2 Reproducibility

Experience has shown that the reproducibility of individual dielectric breakdown values is in the range of ±30 %.

Documents
Document Sharing Hub
Full document details: IEC 60156 2025 RLV

Annex A
(informative)

Improved test method

A.1 Test procedure for improved test method

Annex A describes an improved test method, believed to be able to reduce the scatter of the results of breakdown voltage, which may be used [5], [6], [7]. The results obtained using both methods around the world in the years to come will assist in a future choice when this document is revised.

Use the same instrument and prepare the test according to Clause 4 to Clause 8. Instead of the procedure described in Clause 9, follow the procedure described hereafter (Figure A.1):

NOTE The software of the device can be aligned with the procedure described in this Annex A.

1) The first application of voltage is started at least 5 min after completion of filling and after checking that the liquid under test is free from air bubbles.
2) Apply voltage to the electrodes uniformly and increase the voltage from zero at the rate of 2 kV/s ± 0,2 kV/s until 10 kV is reached.
3) Maintain the 10 kV level for 10 s, then continue with a rate of voltage rise of 2 kV/s ± 0,2 kV/s until a breakdown occurs.
4) The breakdown voltage ~~shall~~ should be recorded at the maximum voltage reached.
5) Carry out 10 breakdowns on the same filling, allowing a pause of at least 1 min after each breakdown before re-application of the test voltage. Record each single breakdown. Calculate the test results as the average and coefficient of variation (ratio between standard deviation and mean breakdown voltage) of the remaining six results after disregarding the two highest and two lowest results.
6) When the coefficient of variation of the test result (mean breakdown voltage) exceeds the upper limit (Figure 3), the test procedure should proceed for another 10 breakdowns, repeating the procedure from 2) to 6) with the same sample liquid. Record also the results of these additional breakdowns. Calculate the test results as the average and coefficient of variation of the remaining 12 results after disregarding the four highest and four lowest results [7].

For insulating liquids having a nominal kinematic viscosity higher than 15 mm^2/s (40 °C), the resting time before application of the voltage shall be increased in the range of 15 min to ~~30~~ 60 min. In addition, the resting time between two consecutive shots shall also be increased accordingly.

Documents
Document Sharing Hub
Full document details: IEC 60156 2025 RLV

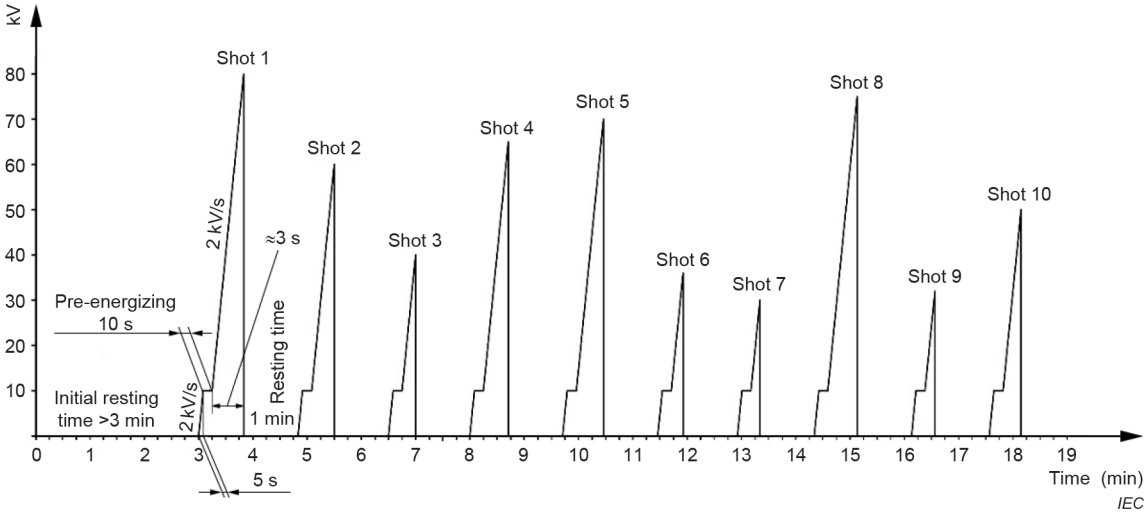

In the average calculation, the results of four outliers (two highest and two lowest values) ~~have to~~ shall be discarded (in this example, shots 1 and 8 are the highest and shots 7 and 9 are the lowest).

Figure A.1 – Example of a sequence of breakdown shots for determination of the breakdown voltage

A.2 Report

See Clause 10.

Documents
Document Sharing Hub
Full document details: IEC 60156 2025 RLV

Annex B
(informative)

Special test method for low volume samples

~~B.1 Low volume sample test~~

~~The special test method reported in this annex is suggested for use with low sample volumes. A limited body of data has shown that The results obtained are comparable to the results obtained from the method described in the main body of this document. Examples of the reduced volume test cell are shown in Figures B.1 and B.2.~~

~~A fast test on-site may require small portable testers, able to measure the breakdown voltage of insulating liquids (in either direct current or alternating current). An example of such instruments is a Cockcroft-Walton generator, which utilizes a small electrode gap cell and measuring instrumentation. The cell in such an instrument also requires very small quantities of test liquid.~~

~~NOTE The results obtained with such portable instruments cannot be used for diagnostic purposes. Results can differ significantly unless comparability has been established.~~

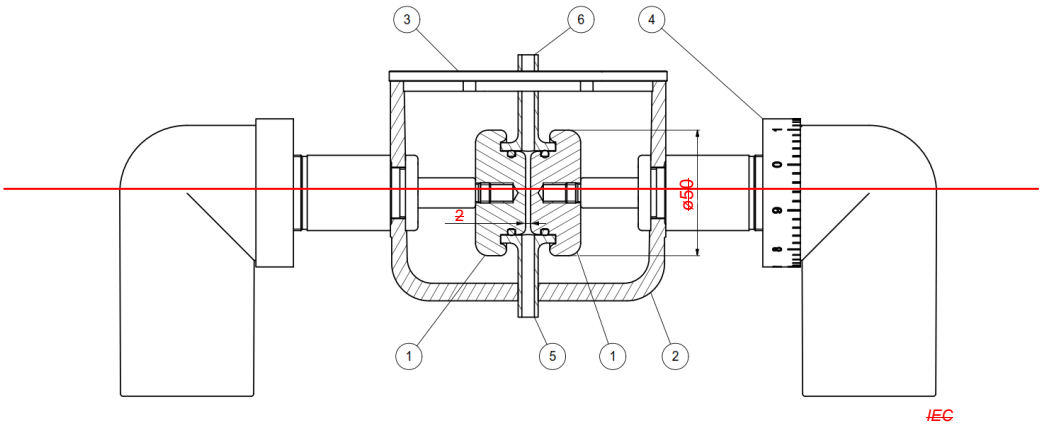

~~**Key**~~

~~1 partially spherical electrodes, rounded disk electrode, 50 mm diameter, 2 mm gap~~

~~2 oil filled cup, test cell HV insulation~~

~~3 cover~~

~~4 electrode distance control~~

~~5 sample inlet~~

~~6 sample outlet~~

~~**Figure B.1 – Example of low volume test cell, fixed electrode distance of 2 mm with 2 ml active volume under dielectric stress**~~

Documents
Document Sharing Hub
Full document details: IEC 60156 2025 RLV