IEC 60269-3

Edition 5.0 2024-08
COMMENTED VERSION

INTERNATIONAL STANDARD

Low- voltage fuses –
Part 3: Supplementary requirements for fuses for ~~use~~ operation by unskilled persons (fuses mainly for household or similar applications) – Examples of standardized systems of fuses A to F

IEC 60269-3:2024-08 CMV(en)

Documents
Document Sharing Hub
Full document details: IEC 60269-3 2024 CMV

THIS PUBLICATION IS COPYRIGHT PROTECTED
Copyright © 2024 IEC, Geneva, Switzerland

All rights reserved. Unless otherwise specified, no part of this publication may be reproduced or utilized in any form or by any means, electronic or mechanical, including photocopying and microfilm, without permission in writing from either IEC or IEC's member National Committee in the country of the requester. If you have any questions about IEC copyright or have an enquiry about obtaining additional rights to this publication, please contact the address below or your local IEC member National Committee for further information.

IEC Secretariat
3, rue de Varembé
CH-1211 Geneva 20
Switzerland

Tel.: +41 22 919 02 11
info@iec.ch
www.iec.ch

About the IEC
The International Electrotechnical Commission (IEC) is the leading global organization that prepares and publishes International Standards for all electrical, electronic and related technologies.

About IEC publications
The technical content of IEC publications is kept under constant review by the IEC. Please make sure that you have the latest edition, a corrigendum or an amendment might have been published.

IEC publications search - webstore.iec.ch/advsearchform
The advanced search enables to find IEC publications by a variety of criteria (reference number, text, technical committee, …). It also gives information on projects, replaced and withdrawn publications.

IEC Just Published - webstore.iec.ch/justpublished
Stay up to date on all new IEC publications. Just Published details all new publications released. Available online and once a month by email.

IEC Customer Service Centre - webstore.iec.ch/csc
If you wish to give us your feedback on this publication or need further assistance, please contact the Customer Service Centre: sales@iec.ch.

IEC Products & Services Portal - products.iec.ch
Discover our powerful search engine and read freely all the publications previews, graphical symbols and the glossary. With a subscription you will always have access to up to date content tailored to your needs.

Electropedia - www.electropedia.org
The world's leading online dictionary on electrotechnology, containing more than 22 500 terminological entries in English and French, with equivalent terms in 25 additional languages. Also known as the International Electrotechnical Vocabulary (IEV) online.

Documents
Document Sharing Hub

Full document details: IEC 60269-3 2024 CMV

IEC 60269-3

Edition 5.0 2024-08
COMMENTED VERSION

INTERNATIONAL STANDARD

Low- voltage fuses –
Part 3: Supplementary requirements for fuses for ~~use~~ operation by unskilled persons (fuses mainly for household or similar applications) – Examples of standardized systems of fuses A to F

INTERNATIONAL
ELECTROTECHNICAL
COMMISSION

ICS 29.120.50

ISBN 978-2-8322-9551-9

Warning! Make sure that you obtained this publication from an authorized distributor.

® Registered trademark of the International Electrotechnical Commission

Documents
Document Sharing Hub

Full document details: IEC 60269-3 2024 CMV

CONTENTS

FOREWORD 10
INTRODUCTION 13
1 General Scope 14
2 Normative references 15
3 Terms and definitions 15
Fuse system A: D type fuse system 17
1 General 17
1.1 Scope 17
2 Terms and definitions 17
3 Conditions for operation in service 17
4 Classification 17
5 Characteristics of fuses 17
5.2 Rated voltage 17
5.3.1 Rated current of the fuse-link 18
5.3.2 Rated current of the fuse-holder 18
5.3.3 Rated current of the gauge-piece 18
5.5 Rated power dissipation of a fuse-link and rated acceptable power dissipation of a fuse-holder 18
5.6 Limits of time-current characteristics 18
5.6.1 Time-current characteristics, time-current zones and overload curves 18
5.6.2 Conventional times and currents 19
5.6.3 Gates 19
5.7 Breaking range and breaking capacity 19
5.7.2 Rated breaking capacity 19
6 Markings 19
6.1 General 19
6.2 Marking of fuse-bases 20
6.3 Marking of the gauge-pieces 20
7 Standard conditions for construction 20
7.1 Mechanical design 20
7.1.2 Connections including terminals 20
7.1.3 Fuse-contacts 21
7.1.4 Construction of a gauge-piece 21
7.1.6 Construction of a fuse-carrier 21
7.1.7 Construction of a fuse-link 22
7.1.8 Non-interchangeability 22
7.1.9 Construction of a fuse-base 22
7.2 Insulating properties and suitability for isolation 23
7.3 Temperature rise, power dissipation of the fuse-link and acceptable power dissipation of the fuse-holder 24
7.7 I^2t characteristics 24
7.7.1 Pre-arcing I^2t values 24
7.7.2 Operating I^2t values 24
7.8 Overcurrent discrimination of "gG" fuse-links 24
7.9 Protection against electric shock 25

AVA Documents
Document Sharing Hub
Full document details: IEC 60269-3 2024 CMV

8 Tests 25
8.1.4 Arrangement of the fuse and dimensions 25
8.2 Verification of the insulating properties and of the suitability for isolation 26
8.2.1 Arrangement of the fuse-holder 26
8.2.6 Creepage distances, clearances and distances through sealing compound 27
8.3 Verification of temperature rise and power dissipation 27
8.3.1 Arrangement of the fuse 27
8.3.3 Measurement of the power dissipation of the fuse-link 27
8.3.5 Acceptability of test results 27
8.5.1 Arrangement of the fuse 28
8.5.2 Characteristics of the test circuit 28
8.5.5 Test method 29
8.5.8 Acceptability of test results 29
8.7.4 Verification of overcurrent discrimination 29
8.9 Verification of resistance to heat 30
8.9.1 Fuse-base 30
8.9.2 Fuse-carrier 31
8.10 Verification of non-deterioration of contacts 31
8.10.1 Arrangement of the fuse 31
8.10.2 Test method 31
8.10.3 Acceptability of test results 32
8.11 Mechanical and miscellaneous tests 33
8.11.1 Mechanical strength 33
Annex AA (informative) Special test for cable overload protection (for fuse system A) 68
AA.1 Arrangement of the fuse 68
AA.2 Test method and acceptability of test results 68
Fuse system B – Cylindrical fuses (NF cylindrical fuse system) 69
1 General 69
1.1 Scope 69
2 Terms and definitions 69
3 Conditions for operation in service 69
4 Classification 70
5 Characteristics of fuses 70
5.2 Rated voltage 70
5.3.1 Rated current of the fuse-link 70
5.3.2 Rated current of the fuse-holder 70
5.5 Rated power dissipation of a fuse-link and rated acceptable power dissipation of a fuse-holder 70
5.6.2 Conventional times and currents 70
5.6.3 Gates 71
5.7.2 Rated breaking capacity 71
6 Markings 71
7 Standard conditions for construction 71
7.1 Mechanical design 72
7.1.2 Connections including terminals 72
7.1.6 Construction of a fuse-carrier 72
7.1.7 Construction of a fuse-link 72

AVA Documents
Document Sharing Hub
Full document details: IEC 60269-3 2024 CMV

7.1.8 Non-interchangeability 73
7.1.9 Construction of a fuse-base 73
7.2 Insulating properties and suitability for isolation 73
7.3 Temperature rise, power dissipation of the fuse-link and acceptable power dissipation of the fuse-holder 74
7.7 I^2t characteristics 74
7.7.1 Pre-arcing I^2t values 74
7.7.2 Operating I^2t values 75
7.8 Overcurrent discrimination of "gG" fuse-links 75
7.9 Protection against electric shock 75
8 Tests 75
8.1.6 Testing of fuse-holders 75
8.3.1 Arrangement of the fuse 76
8.3.3 Measurement of the power dissipation of the fuse-link 76
8.4 Verification of operation 77
8.4.1 Arrangement of the fuse 77
8.5 Verification of the breaking capacity 77
8.5.1 Arrangement of the fuse 77
8.5.5 Test method 78
8.5.8 Acceptability of test results 78
8.7.4 Verification of overcurrent discrimination 78
8.8 Verification of the degree of protection of enclosures 78
8.8.1 Verification of protection against electric shock 78
8.9 Verification of resistance to heat 79
8.10 Verification of non-deterioration of contacts 79
8.10.1 Arrangement of the fuse 79
8.10.2 Test method 79
8.10.3 Acceptability of test results 80
8.12 Verification of the reliability of terminals 83
Fuse system C – Cylindrical fuses (BS cylindrical fuse system) 91
1 General 91
1.1 Scope 91
2 Terms and definitions 91
3 Conditions for operation in service 91
4 Classification 91
5 Characteristics of fuses 92
5.2 Rated Voltage 92
5.3 Rated current 92
5.3.1 Rated current of the fuse-link 92
5.3.2 Rated current of the fuse-holder 92
5.5 Rated power dissipation of a fuse-link and rated acceptable power dissipation of a fuse-holder 92
5.6 Limits of time-current characteristics 92
5.6.1 Time-current characteristics, time-current curves and overload curves 92
5.6.2 Conventional times and currents 92
5.7 Breaking range and breaking capacity 93
5.7.2 Rated breaking capacity 93
6 Markings 93

AVA Documents
Document Sharing Hub
Full document details: IEC 60269-3 2024 CMV

7 Standard conditions for construction 93
7.1 Mechanical design 93
7.1.2 Connections including terminals 93
7.1.6 Construction of a fuse-carrier 93
7.1.7 Construction of a fuse-link 93
7.1.8 Non-interchangeability 93
7.1.9 Construction of a fuse-base 93
7.2 Insulating properties and suitability for isolation 94
7.3 Temperature rise, power dissipation of the fuse-link and acceptable power dissipation of the fuse-holder 94
7.7 I^2t characteristics 94
7.9 Protection against electric shock 94
8 Tests 94
8.1 General 94
8.1.4 Arrangement of the fuse 94
8.3 Verification of temperature rise and power dissipation 94
8.3.1 Arrangement of the fuse 94
8.3.3 Measurement of the power dissipation of the fuse-link 94
8.4 Verification of operation 95
8.4.1 Arrangement of fuse 95
8.5 Verification of breaking capacity 95
8.5.1 Arrangement of the fuse 95
8.5.2 Characteristics of the test circuit 95
8.5.5 Test method 95
8.5.8 Acceptability of test results 95
8.10 Verification of non-deterioration of contacts 95
8.10.1 Arrangement of the fuse 95
8.10.2 Test method 95
8.10.3 Acceptability of test results 96
Fuse system F – Cylindrical fuse-links for use in plugs (BS plugtop system) 104
1 General 104
1.1 Scope 104
2 Terms and definitions 104
3 Conditions for operation in service 104
4 Classification 104
5 Characteristics of fuses 104
5.2 Rated voltage 104
5.3.1 Rated current of the fuse-link 104
5.3.2 Rated current of the fuse-holder 105
5.5 Rated power dissipation of a fuse-link and rated acceptable power dissipation of a fuse-holder 105
5.6.1 Time-current characteristics, time-current zones and overload curves 105
5.6.2 Conventional times and currents 105
5.6.3 Gates 105
5.7.2 Rated breaking capacity 105
6 Markings 105
7 Standard conditions for construction 106
7.1.7 Construction of a fuse-link 106

Documents
Document Sharing Hub
Full document details: IEC 60269-3 2024 CMV

7.1.8 Non-interchangeability ... 106
7.2 Insulating properties and suitability for isolation ... 106
7.3 Temperature rise, power dissipation of the fuse-link and acceptable power dissipation of the fuse-holder ... 106
7.7 I^2t characteristics ... 106
7.7.1 Pre-arcing I^2t values ... 106
7.9 Protection against electric shock ... 106
8 Tests ... 107
8.1.4 Arrangement of the fuse-link for tests ... 107
8.1.5 Testing of fuse-links ... 107
8.2.4 Acceptability of test results ... 108
8.3 Verification of temperature rise and power dissipation ... 109
8.3.1 Arrangement of the fuse ... 109
8.3.4 Test method ... 109
8.3.5 Acceptability of test results ... 109
8.4 Verification of operation ... 109
8.4.1 Arrangement of the fuse ... 109
8.5 Breaking-capacity tests ... 110
8.5.1 Arrangement of the fuse ... 110
8.5.2 Characteristics of the test circuit ... 110
8.5.4 Calibration of the test circuit ... 110
8.5.5 Test method ... 110
8.5.8 Acceptability of test results ... 110
8.7 Verification of I^2t characteristics and overcurrent discrimination ... 111
8.7.3 Verification of compliance for fuse-links at 0,01 s ... 111
8.10 Verification of non-deterioration of contacts ... 111
8.11.1 Mechanical strength ... 111
Annex BB (informative) (for all fuse systems) – Alternative tests for tests No. 1 and No. 2 of Table 20 of IEC 60269-1:2024 ... 116
BB.1 Test method ... 116
BB.2 Test No. 1 ... 116
BB.3 Test No. 2 ... 116
Annex CC (informative) Recommendations for future designs of fuses (for all fuse systems) ... 118
CC.1 Overview ... 118
CC.2 Fuse contacts ... 118
CC.3 Protection against electric shock ... 118
Bibliography ... 119
List of comments ... 120

Figure 101 – Time-current zones for "gG" fuse-links ... 36
Figure 102 – Time-current zones for "gG" fuse-links ... 37
Figure 103 – Time-current zone for "gG" fuse-links 13 A and 32 A ... 38
Figure 104 – Dummy fuse-links according to 8.3 and 8.9.1.1 ... 39
Figure 105 – Test rigs for fuse-links ... 40
Figure 106 – Test rigs for fuse-links ... 41
Figure 107 – Test arrangement for fuse-bases according to 8.9.1.2 ... 42

AVA Documents
Document Sharing Hub
Full document details: IEC 60269-3 2024 CMV

Figure 108 – Example of a torque wrench according to 8.9.2 43
Figure 109 – Measuring points according to 8.3.3, 8.3.4.1 and 8.10.2 of fuse system A 44
Figure 110 – Fuse-link, D-type. Sizes D01-D03 45
Figure 111 – Fuse-link, D-type. Sizes DII-DIV 47
Figure 112 – Fuse-carrier, D-type. Sizes D01-D03 48
Figure 113 – Fuse-carrier, D-type. Sizes DII-DIII 49
Figure 114 – Fuse-carrier, D-type. Size DIV 50
Figure 115 – Edison thread for D-type fuses; limit dimensions 51
Figure 116 – Gauges for Edison thread for D-type fuses for screwed shells of fuse-carrier go ring gauges 52
Figure 117 – Gauges for Edison thread, D-type fuses, go and not-go plug gauges for screwed shells of fuse-bases 54
Figure 118 – Fuse-base, D-type. Sizes D01-D03 55
Figure 119 – Fuse-base, D-type. Sizes DII-DIV 56
Figure 120 – Fuse-base, D-type for push-in gauge pieces. Size DII-DIII 57
Figure 121 – Gauge-piece and hand-key, D-type. Sizes D01-D03 59
Figure 122 – Gauge-piece and hand-key, D-type. Sizes DII-DIV 61
Figure 123 – Gauge-piece and hand-key, D-type push-in gauge rings. Size DII-DIII 63
Figure 124 – Whitworth thread W 3/16 for screw-in gauge rings and corresponding fuse-bases of sizes DII and DIII 64
Figure 125 – Gauges C 17 for concentricity of fuse-bases 65
Figure 126 – Test dummies DII, DIII, D01, D02 and D03 for fuse-carrier test 66
Figure 127 – Time-current zone for "gG" fuse-links 40 A 67
Figure 201 – Fuse-link 84
Figure 202 – Dummy fuse-link 85
Figure 203 – Test-rig and ferrules for the measurement of the voltage drop and the verification of operating characteristics of the cartridge 86
Figure 204 – Fuse-base, A-type and B-type 87
Figure 205 – Housing for verification of operation of the fuse-links with a test rig according to Figure 203 88
Figure 206 – Test rig and ferrules for verification of breaking capacity 89
Figure 207 – Gauge for verification of the upholding of the cartridge in the fuse-carrier during withdrawal 90
Figure 301 – Details of cylindrical fuse-links 97
Figure 302 – Typical outline dimensions of carriers and bases for 230 V cylindrical fuse-links 98
Figure 303 – Typical carrier and base for 400 V cylindrical fuse-links 98
Figure 304 – Time-current zones for "gG" fuse-link 99
Figure 305 – Time-current zones for "gG" fuse-link 100
Figure 306 – Standard test rig for power-dissipation test 101
Figure 307 – Breaking-capacity test rig 103
Figure 601 – Dimensions for cylindrical fuse-links (primarily used in plugs) 112
Figure 602 – Time-current zones for "gG" fuse-links 113
Figure 603 – Test fuse-base 114
Figure 604 – Typical diagram of the circuit used for breaking-capacity tests 115

AVA Documents
Document Sharing Hub
Full document details: IEC 60269-3 2024 CMV

Figure BB.1 – Instant of making for Test No. 1 117

Table 101 – Maximum values of power dissipation 18
Table 102 – Conventional time and current for "gG" fuse-links 19
Table 103 – Gates for specified pre-arcing times of "gG" fuse-links with rated currents 2 A, 4 A, 6 A, 10 A, 13 A and 35 A 19
Table 104 – Cross-sections of rigid (solid or stranded) or flexible copper conductors 21
Table 105 – Creepage distances, clearances and distances through sealing compound 23
Table 106 – Temperature-rise limits for terminals 24
Table 107 – Pre-arcing I^2t values at 0,01 s for "gG" fuse-links 24
Table 108 – I^2t values for the discrimination with circuit breakers 25
Table 109 – Survey of tests on fuse-links 26
Table 110 – Survey of tests on fuse-bases, fuse-carriers and gauge-pieces 26
Table 111 – Test torque for verification of temperature rise and power dissipation 27
Table 112 – Test according to 8.5.5.1 28
Table 113 – Test currents and I^2t limits for the discrimination test 29
Table 114 – Power dissipation of a dummy fuse-link at rated and conventional fusing currents including tolerances 30
Table 115 – Test-torque for mechanical strength 34
Table 116 – Mechanical strength of screw-thread 34
Table 201 – Maximum values of rated power dissipation and values of rated acceptable power dissipation 70
Table 202 – Conventional times and currents for "gG" fuse-links 71
Table 203 – Gates for specified pre-arcing times of "gG" fuse-links with rated currents lower than 16 A 71
Table 204 – Minimum rated breaking capacities 71
Table 205 – Nominal section of copper conductors that the terminals shall accept 72
Table 206 – Creepage distances and clearances 74
Table 207 – Temperature rise limits for terminals 74
Table 208 – Pre-arcing I^2t values at 0,01 s for "gG" fuse-links 74
Table 209 – Survey of tests on fuse-link 75
Table 210 – Survey of tests on fuse-holder and number of fuse-holders to be tested 76
Table 211 – Screw-thread diameters and applied torques 76
Table 212 – Values concerning the choice and the adjustment of the test base 77
Table 213 – Values for adjustment of the test base 78
Table 214 – Hammer and height of fall for test for verification of resistance to shocks 81
Table 215 – Torque to be applied to the fuse-carrier 82
Table 216 – Mechanical strength of screw-thread 83
Table 301 – Conventional time and current for "gG" fuse-links 92
Table 302 – Temperature-rise limits for terminals 94
Table 303 – Mechanical strength of screw-thread 96
Table 601 – Conventional times and conventional currents 105
Table 602 – Gates for specified pre-arcing times of "gG" fuse-links for use in plugs 105
Table 603 – Temperature-rise limits for terminals 106

AVA Documents
Document Sharing Hub

Full document details: IEC 60269-3 2024 CMV

Table 604 – Pre-arcing I^2t values at 0,01 s for "gG" fuse-links 106
Table 605 – Survey of tests on fuse-links 108
Table 606 – Values for breaking-capacity tests 110
Table BB.1 – Approximate values of prospective currents for breaking capacity test No. 2.. 116

Documents
Document Sharing Hub
Full document details: IEC 60269-3 2024 CMV

INTERNATIONAL ELECTROTECHNICAL COMMISSION

LOW-VOLTAGE FUSES –

Part 3: Supplementary requirements for fuses for ~~use~~ operation 1 by unskilled persons (fuses mainly for household and similar applications) – Examples of standardized systems of fuses A to F

FOREWORD

1) The International Electrotechnical Commission (IEC) is a worldwide organization for standardization comprising all national electrotechnical committees (IEC National Committees). The object of IEC is to promote international co-operation on all questions concerning standardization in the electrical and electronic fields. To this end and in addition to other activities, IEC publishes International Standards, Technical Specifications, Technical Reports, Publicly Available Specifications (PAS) and Guides (hereafter referred to as "IEC Publication(s)"). Their preparation is entrusted to technical committees; any IEC National Committee interested in the subject dealt with may participate in this preparatory work. International, governmental and non-governmental organizations liaising with the IEC also participate in this preparation. IEC collaborates closely with the International Organization for Standardization (ISO) in accordance with conditions determined by agreement between the two organizations.

2) The formal decisions or agreements of IEC on technical matters express, as nearly as possible, an international consensus of opinion on the relevant subjects since each technical committee has representation from all interested IEC National Committees.

3) IEC Publications have the form of recommendations for international use and are accepted by IEC National Committees in that sense. While all reasonable efforts are made to ensure that the technical content of IEC Publications is accurate, IEC cannot be held responsible for the way in which they are used or for any misinterpretation by any end user.

4) In order to promote international uniformity, IEC National Committees undertake to apply IEC Publications transparently to the maximum extent possible in their national and regional publications. Any divergence between any IEC Publication and the corresponding national or regional publication shall be clearly indicated in the latter.

5) IEC itself does not provide any attestation of conformity. Independent certification bodies provide conformity assessment services and, in some areas, access to IEC marks of conformity. IEC is not responsible for any services carried out by independent certification bodies.

6) All users should ensure that they have the latest edition of this publication.

7) No liability shall attach to IEC or its directors, employees, servants or agents including individual experts and members of its technical committees and IEC National Committees for any personal injury, property damage or other damage of any nature whatsoever, whether direct or indirect, or for costs (including legal fees) and expenses arising out of the publication, use of, or reliance upon, this IEC Publication or any other IEC Publications.

8) Attention is drawn to the Normative references cited in this publication. Use of the referenced publications is indispensable for the correct application of this publication.

9) IEC draws attention to the possibility that the implementation of this document may involve the use of (a) patent(s). IEC takes no position concerning the evidence, validity or applicability of any claimed patent rights in respect thereof. As of the date of publication of this document, IEC had not received notice of (a) patent(s), which may be required to implement this document. However, implementers are cautioned that this may not represent the latest information, which may be obtained from the patent database available at https://patents.iec.ch. IEC shall not be held responsible for identifying any or all such patent rights.

This commented version (CMV) of the official standard IEC 60269-3:2024 edition 5.0 allows the user to identify the changes made to the previous IEC 60269-3:2010+AMD1:2013+AMD2:2019 CSV edition 4.2. Furthermore, comments from IEC SC 32B experts are provided to explain the reasons of the most relevant changes, or to clarify any part of the content.

A vertical bar appears in the margin wherever a change has been made. Additions are in green text, deletions are in strikethrough red text. Experts' comments are identified by a blue-background number. Mouse over a number to display a pop-up note with the comment.

This publication contains the CMV and the official standard. The full list of comments is available at the end of the CMV.

Documents
Document Sharing Hub

Full document details: IEC 60269-3 2024 CMV

IEC 60269-3 has been prepared by subcommittee 32B: Low-voltage fuses, of IEC technical committee 32: Fuses. It is an International Standard.

This fifth edition cancels and replaces the fourth edition published in 2010, Amendment 1:2013 and Amendment 2:2019. This edition constitutes a technical revision.

This edition includes the following significant technical changes with respect to the previous edition:

a) Introduction and general scope fully updated;
b) Normative references updated and editorial changes;
c) Terms “ordinary person”, “operation" and “non-interchangeability” defined;
d) In System A: Parts defined for removal;
e) In System A: Marking of fuse-bases added for direction of current flow;
f) In System A: Clarifications added for connection;
g) In System A: Clarification of construction of fuse-carrier and fuse-link;
h) In System A: Clarification of voltage drop measurement.

The text of this International Standard is based on the following documents:

Draft	Report on voting
32B/745/FDIS	32B/754/RVD

Full information on the voting for its approval can be found in the report on voting indicated in the above table.

The language used for the development of this International Standard is English.

This part is to be used in conjunction with IEC 60269-1:2024, *Low-voltage fuses – Part 1: General requirements.*

This Part 3 supplements or modifies the corresponding clauses or subclauses of Part 1.

Where no change is necessary, this Part 3 indicates that the relevant clause or subclause applies.

Tables and figures which are additional to those in Part 1 are numbered starting from 101. Additional annexes are numbered AA, BB, etc.

This document was drafted in accordance with ISO/IEC Directives, Part 2, and developed in accordance with ISO/IEC Directives, Part 1 and ISO/IEC Directives, IEC Supplement, available at www.iec.ch/members_experts/refdocs. The main document types developed by IEC are described in greater detail at www.iec.ch/publications.

IEC 60269 consists of the following parts, under the general title *Low-voltage fuses*:

Part 1: *General requirements*

Part 2: *Supplementary requirements for fuses for use by authorized persons (fuses mainly for industrial application) – Examples of standardized systems of fuses A to K*

Part 3: *Supplementary requirements for fuses for use by unskilled persons (fuses mainly for household or similar applications) – Examples of standardized systems of fuses A to F*

Part 4: *Supplementary requirements for fuse-links for the protection of semiconductor devices*

AVA Documents
Document Sharing Hub

Full document details: IEC 60269-3 2024 CMV

Part 5: *Guidance for the application of low-voltage fuses*

A list of all parts of the IEC 60269 series, under the general title, *Low-voltage fuses*, can be found on the IEC website.

The committee has decided that the contents of this document will remain unchanged until the stability date indicated on the IEC website under webstore.iec.ch in the data related to the specific document. At this date, the document will be

- reconfirmed,
- withdrawn, or
- revised.

IMPORTANT – The "colour inside" logo on the cover page of this document indicates that it contains colours which are considered to be useful for the correct understanding of its contents. Users should therefore print this document using a colour printer.

Documents
Document Sharing Hub

Full document details: IEC 60269-3 2024 CMV

INTRODUCTION 2

Fuses for use by unskilled persons according to the following fuse systems comply with all subclauses of IEC 60269-1 and with the requirements laid down in the relevant fuse systems.

This part of IEC 60269 is divided into four fuse systems, each dealing with a specific example of standardized fuses for use by unskilled persons.

All systems provide their own mechanical solution to avoid the use of a fuse-link with higher current rating (non-interchangeability) to ensure the protection of cables and lines. The applicant is required to take care to replace a fuse-link by the same type.

Fuse system	Principles of non-interchangeability
Fuse system A: D type fuse system 1)	Diameter and shape at bottom side of the fuse-links differs, fuse bases require gauge-pieces
Fuse system B: Cylindrical fuses (NF cylindrical fuse system) 2)	Fuse-links and suitable fuse-holders (fuse-carriers) provide unique dimensions
Fuse system C: Cylindrical fuses (BS cylindrical fuse system) 2)	Fuse-links and suitable fuse-holders (fuse-carriers) provide unique dimensions
Fuse system F: Cylindrical fuse-links for use in plugs (BS plugtop fuse system) 1)	Fuse-links and suitable fuse-holders (fuse-carriers) provide unique dimensions

NOTE 1 Applicants of system A and F may have fuse-bases in their installation not providing degree of protection IP2X all the time. The degree of protection may temporarily be reduced to IP1X, when replacing the fuse-link. The temporary suspension of the complete protection IP2X against electric shock (after many years of sufficiently safe application of the D-type fuse system by unskilled users) need not be regarded as dangerous, as there is enough experience with interchanging of incandescent lamps, where comparable degrees of safety exist. For future designs Annex CC recommends that the degree of protection against electric shock during the period of replacing a fuse-link should be at least IP2X.

NOTE 2 Fuse-links are not to be interchanged with fuse-links of the same dimension but with different characteristics (e. g. aM).

It is important for safety and therefore strictly forbidden to mix components of different fuse-systems such as fuse-links, fuse-holders and fuse-bases.

Documents
Document Sharing Hub
Full document details: IEC 60269-3 2024 CMV

LOW-VOLTAGE FUSES –

Part 3: Supplementary requirements for fuses for ~~use~~ operation 1 by unskilled persons (fuses mainly for household and similar applications) – Examples of standardized systems of fuses A to F

1 General Scope 3

~~Fuses for use by unskilled persons according to the following fuse systems comply with all subclauses of IEC 60269-1 and with the requirements laid down in the relevant fuse systems.~~

~~This standard is divided into four fuse systems, each dealing with a specific example of standardized fuses for use by unskilled persons:~~

- ~~Fuse system A: D type fuse system~~
- ~~Fuse system B: Cylindrical fuses (NF cylindrical fuse system)~~
- ~~Fuse system C: Cylindrical fuses (BS cylindrical fuse system)~~
- ~~Fuse system F: Cylindrical fuse-links for use in plugs (BS plugtop fuse system)~~

~~NOTE 1 Examples of standardized fuses complying with the requirements of IEC 60269-1 are listed in the present standard. Other examples may be added, provided that they comply with these requirements.~~

~~For recommendations for future designs of fuses, see Annex CC.~~

~~NOTE 2 The following fuse systems are standardized systems with respect to their safety aspects.~~

~~The National Committees may select from the examples of standardized fuses one or more systems for their own standards. Colour codes are not specified for each fuse system. Where colour codes are indicated, they apply only to that particular fuse system.~~

This part of IEC 60269 is divided into four fuse systems, each dealing with a specific example of standardized fuses for use by unskilled persons.

This part applies to “gG” fuses only.

Unskilled persons do not have technical knowledge or sufficient experience. To avoid dangers, which electricity may create, the relevant part of the fuse standard shall provide requirements for maximum safety in service. IEC 60269-3 provides four systems for use by unskilled persons. Instructions for the safe operation of fuse-links are provided in the manufacturer’s literature.

All systems provide their own mechanical solution to avoid the use of a fuse-link with higher current rating (non-interchangeability) whereas the protection of cables and lines is ensured. The applicant is required to take care to replace a fuse-link by the same type.

Fuse system	Principles of non-interchangeability
Fuse system A: D type fuse system 1)	Diameter and shape at bottom side of the fuse-links differs, fuse bases require gauge-pieces
Fuse system B: Cylindrical fuses (NF cylindrical fuse system) 2)	Fuse-links and suitable fuse-holders (fuse-carriers) provide unique dimensions
Fuse system C: Cylindrical fuses (BS cylindrical fuse system) 2)	Fuse-links and suitable fuse-holders (fuse-carriers) provide unique dimensions

AVA Documents
Document Sharing Hub
Full document details: IEC 60269-3 2024 CMV

Fuse system F: Cylindrical fuse-links for use in plugs (BS plugtop fuse system) 1)	Fuse-links and suitable fuse-holders (fuse-carriers) provide unique dimensions

2 Normative references 4

The following documents are referred to in the text in such a way that some or all of their content constitutes requirements of this document. For dated references, only the edition cited applies. For undated references, the latest edition of the referenced document (including any amendments) applies.

IEC 60068-2-31, *Environmental testing – Part 2-31: Tests – Test Ec: Rough handling shocks, primarily for equipment-type specimens*

IEC 60269-1:~~2006~~2024, *Low-voltage fuses – Part 1: General requirements*~~-~~
~~Amendment 1 (2009)~~

IEC 60664 (all parts), *Insulation coordination for equipment within low-voltage systems*

IEC 60898-1:~~2002~~2015, *Electrical accessories – Circuit-breakers for overcurrent protection for household and similar installations – Part 1:Circuit-breakers for AC operation*
~~*Amendment 1(2002)*~~
~~*Amendment 2 (2003)*~~
IEC 60898-1:2015/AMD1:2019

~~IEC 60999:1990, *Connecting devices – Electrical copper conductors – Safety requirements for screw-type and screwless-type clamping units for electrical copper conductors*~~

IEC 60999-1:1999, *Connecting devices – Electrical copper conductors – Safety requirements for screw-type and screwless-type clamping units – Part 1: General requirements and particular requirements for clamping units for conductors from 0,2 mm^2 up to 35 mm^2 (included)*

IEC 61439-1, *Low-voltage switchgear and controlgear assemblies – Part 1: General rules*

IEC 61439-3:2012, *Low-voltage switchgear and controlgear assemblies – Part 3: Distribution boards intended to be operated by ordinary persons (DBO)*

3 Terms and definitions

For the purposes of this document, the terms and definitions given in IEC 60269-1:2024 and the following apply.

ISO and IEC maintain terminology databases for use in standardization at the following addresses:

- IEC Electropedia: available at https://www.electropedia.org/
- ISO Online browsing platform: available at https://www.iso.org/obp

3.1
ordinary person
person who is neither a skilled person nor an instructed person

3.2
operation
operation is defined for this standard as the exchange of the fuse-link

Documents
Document Sharing Hub
Full document details: IEC 60269-3 2024 CMV

3.3
non interchangeability
limitations on shape and/or dimensions with the object of avoiding in a specific fuse-base the inadvertent use of fuse-links having electrical properties other than those ensuring the desired degree of protection

[SOURCE: IEC 60050-441:1984, 441-18-33]

Documents
Document Sharing Hub

Full document details: IEC 60269-3 2024 CMV

Fuse system A:
D type fuse system

1 General

IEC 60269-1 applies with the following supplementary requirements.

1.1 Scope

The following additional requirements apply to ”gG” fuses for use by unskilled persons for domestic and similar applications with rated currents up to and including 100 A and rated voltages of up to and including 500 V AC and 500 V DC.

The following characteristics of the fuses are specified in addition to IEC 60269-1:

- rated voltage;
- rated power dissipation of the fuse-link and rated acceptable power dissipation of a fuse-holder;
- time-current characteristic;
- gates, I^2t characteristics and conventional times and currents;
- rated breaking capacity;
- marking on the fuse;
- standard conditions for construction;
- tests.

2 Terms and definitions

IEC 60269-1 applies with the following additions.

2.1.13

Defined parts which can be removed from a fuse: fuse carrier and fuse-link. 5

3 Conditions for operation in service

IEC 60269-1 applies.

4 Classification

IEC 60269-1 applies.

5 Characteristics of fuses

IEC 60269-1 applies with the following supplementary requirements.

5.2 Rated voltage

For AC, the standard values of rated voltages are 400 V for size D01, D02 and D03[1] and 500 V for size DII, DIII and DIV.

[1] These three sizes are also applicable for 415 V networks.

Documents
Document Sharing Hub

Full document details: IEC 60269-3 2024 CMV

For DC, the rated voltages are 250 V for D01, D02 and D03 and 500 V for DII, DIII and DIV.

5.3.1 Rated current of the fuse-link

The rated currents of the fuse-links are given in Figure 110 and Figure 111.

5.3.2 Rated current of the fuse-holder

The rated currents of the fuse-carriers are given in Figure 112, Figure 113 and Figure 114. The rated currents of the fuse-bases are given in Figure 118, Figure 119 and Figure 120.

5.3.3 Rated current of the gauge-piece

The rated current of the gauge-piece is identical with the highest rated current of the fuse-link, which the gauge piece can accept.

5.5 Rated power dissipation of a fuse-link and rated acceptable power dissipation of a fuse-holder

The maximum values of power dissipation of D-type fuse-links are specified in Table 101.

Table 101 – Maximum values of power dissipation

Rated current In A	Maximum power dissipation W	
	D01 to D03	DII to DIV
2	2,5	3,3
4	1,8	2,3
6	1,8	2,3
10	2,0	2,6
13	2,2	2,8
16	2,5	3,2
20	3,0	3,5
25	3,5	4,0
32	4,0	5,2
35	4,0	5,2
40	4,4	5,7
50	5,0	6,5
63	5,5	7,0
80	6,5	8,0
100	7,0	9,0

5.6 Limits of time-current characteristics

5.6.1 Time-current characteristics, time-current zones and overload curves

In addition to the limits of pre-arcing time given by the gates and the conventional times and currents, time-current zones are stated in Figure 101, Figure 102, Figure 103 and Figure 127. The tolerance on time-current characteristics given by the manufacturer shall not deviate by more than ±10 % in terms of current.

Documents
Document Sharing Hub
Full document details: IEC 60269-3 2024 CMV

The time-current zones given in Figure 101, Figure 102, Figure 103 and Figure 127, including manufacturing tolerances, shall be met for all pre-arcing and operating times measured at the test voltage according to 8.7.4.

5.6.2 Conventional times and currents

The conventional times and currents, in addition to the values of IEC 60269-1, are given in Table 102.

Table 102 – Conventional time and current for "gG" fuse-links

Rated current I_n	Conventional time	Conventional current	
A	h	I_{nf}	I_f
2 and 4	1	1,5 I_n	2,1 I_n
6 and 10	1	1,5 I_n	1,9 I_n
13 ≤ I_n ≤ 35	1	1,25 I_n	1,6 I_n

5.6.3 Gates

For "gG" fuse-links, in addition to the gates of IEC 60269-1, the gates given in Table 103 apply.

Table 103 – Gates for specified pre-arcing times of "gG" fuse-links with rated currents 2 A, 4 A, 6 A, 10 A, 13 A and 35 A

I_n	$I_{min.}$ (10 s)	$I_{max.}$ (5 s)	$I_{min.}$ (0,1 s)	$I_{max.}$ (0,1 s)
A	A	A	A	A
2	3,7	9,2	6,0	23,0
4	7,8	18,5	14,0	47,0
6	11,0	28,0	26,0	72,0
10	22,0	46,5	58,0	111,0
13	26,0	59,8	75,4	144,3
35	89,0	175,0	255,0	445,0

5.7 Breaking range and breaking capacity

5.7.2 Rated breaking capacity

The rated breaking capacity shall not be less than the following values:

– 50 kA AC

– 8 kA DC

~~NOTE D-type fuses are frequently used in a.c. installations with short-circuit currents higher than 20 kA, and also in d.c. installations. Therefore, all fuses ought to comply with the requirements of this subclause.~~ 6

6 Markings

6.1 General

IEC 60269-1 applies with the following supplementary requirements.

Documents
Document Sharing Hub

Full document details: IEC 60269-3 2024 CMV

Fuse-links and fuse-holders which meet the requirements and tests of this fuse system may be marked with "IEC 60269-3". ~~For devices according to this standard, national approvals can be awarded by national test-houses. Such national approvals may be marked on the relevant parts of the fuse. The marking shall be durable. This durability shall be proved by appropriate tests.~~ 7

6.2 Marking of fuse-bases

If the fuse-bases are not capable of bidirectional current flow, they shall be marked with the current flow direction at front or lateral side. For this, preferentially, the symbol 5107A in accordance with IEC 60417 should be used. The arrows may be covered in the installed state of the fuse-base. 8

In the case of fuse-bases for busbar mounting, the marking with the current flow direction is not required.

6.3 Marking of the gauge-pieces

– name of manufacturer or trademark by which he may be readily identified;

– rated current, or colour code.

~~NOTE~~ For gauge-pieces having very small dimensions, the manufacturer's name may be omitted, provided it is indicated on the packing.

7 Standard conditions for construction

IEC 60269-1 applies with the following supplementary requirements.

7.1 Mechanical design

~~Deviations from the dimensions specified in the figures may be made, but only if they provide a technical advantage and do not adversely affect the purpose and safety of fuses complying with the standard sheets, especially with regard to interchangeability and to non-interchangeability. Fuses with such deviations shall, however, comply with all other requirements of this specification as far as they reasonably apply.~~ 9

IEC 60269-1 applies with the following additions and changes.

7.1.2 Connections including terminals

Mounting of all fuse bases and the wiring must be done by authorized/skilled person. 10

The terminals shall be capable of accepting the cross-sections of conductors indicated in Table 104.

The largest cross-sectional areas specified in Table 104 may be reduced to 6 mm^2 (size DII); 16 mm^2 (size DIII) and 35 mm^2 (size DIV), provided that the fuse-base terminals are connected to internal wiring of switchboards, fuse-boxes, etc. and external conductors are consequently fitted to separate supply terminals of a type-tested or partially type-tested assembly.

In the case of fuse-bases for busbar mounting, the busbar dimensions and centre distances have to be specified by the manufacturer. The busbar cross-section shall correspond to the value Q according to the table in Figure 118.

The connections to the busbars shall meet the requirements described in 8.10.

Documents
Document Sharing Hub
Full document details: IEC 60269-3 2024 CMV

Table 104 – Cross-sections of rigid (solid or stranded) or flexible copper conductors

Fuse-base		Cross-section
Size	I_n	
	A	mm^2
D01	16	1,5 to 4
D02	63	1,5 to 25
D03	100	10 to 50
DII	25	1,5 to 10
DIII	63	2,5 to 25
DIV	100	10 to 50
~~NOTE This table is provisional, awaiting the results of IEC SC 17B and/or 23F.~~		

7.1.3 Fuse-contacts

The fuse-contacts shall be nickel-plated or protected by other materials of at least similar protective properties.

Fuse-link contacts of rated currents 50 A and above and fuse-link contacts of D02 fuse-links of rated currents 32 A up to 40 A shall be silver-plated with a minimum thickness of the silver layer of 3 µm.

7.1.4 Construction of a gauge-piece

The contact pieces, if any, shall be in one piece and made of copper alloy containing at least 50 % copper. Their contact surfaces shall be flat and free from burrs.

The metal portion of gauge-pieces of sizes DII and DIII shall have smooth contact surfaces on both sides without burrs within the prescribed area, and both contact surfaces shall protrude from the adjacent ceramic material.

For DII, DIII and DIV-fuses, the part forming the calibration ring shall be of ceramic material. The colour of the face of the calibration ring shall be in accordance with the colour of the fuse indicator given in the table in Figure 111.

NOTE Gauge-pieces ensure non-interchangeability. Therefore, they are so designed as to be insertable or replaceable only by special hand keys, which are not available to unskilled persons.

Compliance with the requirements of the subclause is to be checked by inspection.

With respect to the two types of fuse-bases of size DII and DIII there are two types of gauge-pieces:

– screw-in gauge-pieces (Figure 122);
– push-in gauge-pieces (Figure 123).

See Figure 121, Figure 122, Figure 123 and Figure 124.

7.1.6 Construction of a fuse-carrier

A fuse-carrier shall be provided with means for retaining the fuse-link in position whether the fuse-carrier is fitted in the fuse-base or not.

Documents
Document Sharing Hub
Full document details: IEC 60269-3 2024 CMV

Defined according to Figure 112 for fuse-carrier D0 and Figure 113 for D Type fuses-carrier and for the fuse-links in Figure 110 for D0 and Figure 111 for D-Type fuse-links. **11**

A fuse-carrier for fuse-links for which an indicating device is required shall be provided with an appropriate opening for observing the indicator. The opening shall be closed with a securely fixed window of suitable transparent material or other suitable means of protection against material, which could be ejected from the indicator.

The screwed-shell shall be of solid copper alloy containing at least 50 % copper and those made from rolled sheet at least 62 % copper.

The insulating parts shall be of ceramic or other sufficiently heat-resistant material.

The hole for the voltage tester is optional.

See Figure 112, Figure 113, Figure 114, Figure 115 and Figure 116.

7.1.7 Construction of a fuse-link

A fuse-link shall be so constructed that it is not possible to remove or to replace parts ensuring non-interchangeability without a tool.

A fuse-link has no interchangeable parts. Only the Gauge piece ensures the non-interchangeability. It is not possible to interchange a fuse-link with a higher rating. **12**

In case the fuse-link has an indicating device, the indication shall be visible when the fuse-link is inserted in the fuse-holder or fuse-carrier.

The fuse-link body shall be of ceramic material. Contact pieces shall be of copper or an alloy containing at least 62 % copper. The colour of the fuse-indicator shall be in accordance with Figure 111.

See Figure 110 and Figure 111.

7.1.8 Non-interchangeability

Fuses shall be so designed that a fuse-link cannot be replaced inadvertently by another rated current exceeding a pre-determined value.

For rated currents below 10 A, non-interchangeability is not required.

7.1.9 Construction of a fuse-base

A fuse-base shall be so designed that it can be securely fixed in such a way that its unintentional removal is not possible.

A fuse-base intended for use with gauge pieces shall be provided with suitable means for retaining the gauge pieces in positions and allowing their removal only by the aid of a suitable tool.

Covers of fuse-bases providing protection against access of live parts shall withstand the mechanical stresses occurring during fixing and shall be firmly fixed in such a manner that they can be removed only by the aid of a tool or deliberate action when mounted.

The terminals shall be suitable for accepting conductors with the appropriate cross sectional areas

AVA Documents
Document Sharing Hub

Full document details: IEC 60269-3 2024 CMV

Current-carrying parts of solid copper alloy shall contain at least 50 % copper and those made from rolled material at least 62 % copper.

A fuse-base for rail-mounting shall not detach when inserting and removing the fuse-link (2/3 of the torque designated for fuse-carriers of Table 115 shall be used).

The fuse-base may move back and forth longitudinally on the rail.

A fuse-base for surface-mounting shall not wobble when placed on a flat surface.

For fuse-bases of size DII and size DIII there are two types, which differ with respect to the construction of the gauge-piece:

– fuse-bases for screw-in gauge-pieces (Figure 119);
– fuse-bases for push-in gauge-pieces (Figure 120).

See Figure 115, Figure 117, Figure 118, Figure 119, Figure 120 and Figure 124.

7.2 Insulating properties and suitability for isolation

The minimum creepage distances, clearances and distances through the insulation material or sealing compound shall comply with the values given in Table 105. In the case of fuse-bases for busbar mounting, the specified values shall be observed when busbars with the maximum dimensions and the minimum separation distances are used.

Table 105 – Creepage distances, clearances and distances through sealing compound

Creepage distance mm	**DII to DIV**	**D01 to D03**
Between metal parts, including contacts, which are of different polarity when the fuse-link has operated	5	4
Between live parts and accessible metal parts, including fuse-base fixing screws or metallic fixing means for rail mounting, with a fuse-carrier, a fuse-link and a gauge-piece in position	5	3
~~Between live parts and cover fixing screws or metallic fixing means for rail mounting which are not earthed and not accessible to the standard test finger~~	~~3~~	~~2~~
Clearance mm	**DII to DIV**	**D01 to D03**
Between metal parts, including contacts, which are of different polarity when the fuse-link has operated	5	3
Between live parts and accessible metal parts, including fuse-base fixing screws or metallic fixing means for rail mounting, with a fuse-carrier, a fuse-link and a gauge-piece in position	5	3
~~Between live parts and cover fixing screws or metallic fixing means for rail mounting which are not earthed and not accessible to the standard test finger~~	~~3~~	~~2~~
Distance mm	**DII to DIV**	**D01 to D03**
Between live parts and the surface on which a fuse-base for front connection is mounted	10	6
Through sealing compound between live parts covered with at least 2,5 mm of sealing compound and the surface on which a fuse-base for front connection is mounted	5	3

Documents
Document Sharing Hub
Full document details: IEC 60269-3 2024 CMV

NOTE ~~1~~ The standard test finger referred to in this table is that specified in IEC 60529.

~~NOTE 2 Pending the result of SC 17B, TC 23 and TC109 of IEC, the table is provisional.~~ 13

7.3 Temperature rise, power dissipation of the fuse-link and acceptable power dissipation of the fuse-holder

Instead of Table 5 of IEC 60269-1:2024, Table 106 applies. 14

Table 106 – Temperature-rise limits for terminals

For terminals, the temperature-rise limits, when the fuse-base is fitted with conductors having a cross-section as indicated in Table 17 of IEC 60269-1:2024, for the corresponding rated current of the fuse-base shall not exceed	65K

7.7 I^2t characteristics

7.7.1 Pre-arcing I^2t values

In addition to Table 7 of IEC 60269-1:2024, the pre-arcing I^2t values given in Table 107 apply.

Table 107 – Pre-arcing I^2t values at 0,01 s for "gG" fuse-links

I_n A	I^2t_{min} A^2s	I^2t_{max} A^2s
2	1,0	23,0
4	6,2	90,2
6	24,0	225,0
10	100,0	676,0
13	170,0	900,0
35	2 250,0	8 000,0

7.7.2 Operating I^2t values

The maximum pre-arcing I^2t values given in Table 107 of this document and of Table 7 of IEC 60269-1:2024 shall be taken as maximum operating I^2t values and shall be verified by the breaking capacity test specified in 8.7.1 of IEC 60269-1:2024.

7.8 Overcurrent discrimination of "gG" fuse-links

Fuse-links 16 A and above in series, with the rated current ratio of 1:1,6 have to operate selectively in the whole breaking range (see 8.7.4).

With regard to discrimination when circuit-breakers are used, the I^2t values given in Table 108 shall be followed:

Documents
Document Sharing Hub
Full document details: IEC 60269-3 2024 CMV

Table 108 – I^2t values for the discrimination with circuit breakers

I_n A	I^2t_{min} A^2s	I_p A
16	250	500
20	450	670
25	810	900
32	1 400	1 180
35	2 000	1 410
40	2 500	1 580
50	4 000	2 000
63	6 300	2 510
80	10 000	3 160
100	16 000	4 000

7.9 Protection against electric shock

The degree of protection shall be at least IP2X when the fuse is under normal service conditions.

For D-type fuses, the operation of replacing a fuse-link is considered in two stages, which are: "removing the fuse-link and the fuse-carrier" and "fuse-link and fuse-carrier removed". The first stage is considered to represent D-type fuses under normal service conditions. Only when the fuse-link and the fuse-carrier are removed may the degree of protection temporarily be reduced to IP1X.

NOTE The temporary suspension of the complete protection IP2X against electric shock (after many years of sufficiently safe application of the D-type fuse system by unskilled users) need not be regarded as dangerous, as there is enough experience with interchanging of incandescent lamps, where comparable degrees of safety exist.

8 Tests

IEC 60269-1 applies with the following supplementary requirements.

8.1.4 Arrangement of the fuse and dimensions

The thickness of the screwed shell of fuse-bases and fuse-carriers ~~is~~ shall be measured (e.g. by means of a micrometer with pointed noses) **15**. The mean values of two sets of three measurements shall be at least equal to the value specified in Figure 112, Figure 113, Figure 114, Figure 118, Figure 119 and Figure 120.

The two sets of measurements are made on one of two different longitudinal lines, which are at least 30°, displaced with respect to each other.

The three measurements along the longitudinal line are equally distributed over this, if possible, at the most unfavourable points.

For rolled thread, one of the measurements is made at the top, one at the bottom of the thread and the remaining one between these as one likes.

For fuse-carriers the measurements are made at the part of the screwed shell, which protrudes from the insulator.

For fuse-bases no measurement is made in the first course of the thread.

In the case of fuse-bases for busbar mounting, the busbar dimensions and centre distances specified by the manufacturer shall be taken into account. The busbars used for the individual tests shall be selected according to the respective electrical, thermal and mechanical stresses.

AVA Documents
Document Sharing Hub
Full document details: IEC 60269-3 2024 CMV

The busbars used for the individual tests shall be specified in the test report (materials, dimensions).

8.1.5.1 Complete tests

The following additional tests are required according toTable 109 and Table 110.

Table 109 – Survey of tests on fuse-links

Test according to subclause		Number of test samples					
		3	4	1	1	2	1
8.4.3.2	Verification of rated current	x					
8.7.4	Verification discrimination		x				
8.11.1	Mechanical strength			x	x		
8.11.2.4	Resistance to storage at elevated temperature					x	x
8.11.2.6	Dimensions and non-interchangeability	x	x				

Table 110 – Survey of tests on fuse-bases, fuse-carriers and gauge-pieces

Test according to subclause		Number of test samples									
		Fuse-bases				Fuse-carriers					Gauge-pieces
		1	1	3	1	1	1	1	3	1	1 1
8.9	Verification of resistance to heat	x				x					
8.11.1	Mechanical strength		x				x	x			x x
8.11.2.4	Resistance to storage at elevated temperature			x	x				x	x	
8.11.2.6	Dimensions and non-interchangeability										x x

8.1.5.2 Testing of fuse-links of a homogeneous series

In addition to IEC 60269-1, the following applies.

Fuse-links having different contact parts and different shapes of ceramic bodies only intended to provide non-interchangeability and not affecting the performance ~~may be~~ are **16** considered to meet the requirements of a homogeneous series.

8.2 Verification of the insulating properties and of the suitability for isolation

8.2.1 Arrangement of the fuse-holder

In addition to IEC 60269-1, the following applies.

The metal covering (can be aluminium foil) shall not be pressed on to the inspection window. For fuse-carriers, for example, a distance of 3 mm from the outer lower edge of the insulating part shall be left uncovered by metal covering.

Fuse-bases for busbar mounting shall be used together with busbars with the maximum dimensions and the minimum separation distances.

8.2.2.3 Test method

In addition to IEC 60269-1, the following applies.

Documents
Document Sharing Hub
Full document details: IEC 60269-3 2024 CMV

8.2.2.3.1 This test shall be performed immediately after the humidity treatment described in 8.2.2.3.2 of IEC 60269-1:2024. The fuse-holder shall be submitted to the test voltage given in Table 15 of IEC 60269-1:2024.

8.2.6 Creepage distances, clearances and distances through sealing compound

8.2.6.1 Test method

Creepage distances, clearances and distances are measured on the complete fuse, first using conductors with the smallest cross-sectional areas specified in Table 104, and then the largest.

NOTE The contribution to the creepage distance of any groove less than 1 mm wide is limited to its width. Any air gap less than 1 mm wide is ignored in computing the total clearance.

8.2.6.2 Acceptability of test results

Creepage distances, clearances and distances shall not be less than the values in millimetres in Table 105.

8.3 Verification of temperature rise and power dissipation

8.3.1 Arrangement of the fuse

The fuse-carrier shall be inserted with a torque as indicated in Table 111.

Table 111 – Test torque for verification of temperature rise and power dissipation

Size	Torque Nm
D01	1,0
D02	1,0
D03	1,7
DII	2,7
DIII	4,3
DIV	6,7

The torque applied to the screws of the terminals is two-thirds of the values given in Table 116.

In the case of fuse-bases for busbar mounting, busbars with the smallest dimensions as specified by the manufacturer shall be used.

8.3.3 Measurement of the power dissipation of the fuse-link

The points at which the power dissipation is measured are marked with B and C in Figure 109.

8.3.4.1 Temperature rise of the fuse-holder

The test shall be made with a dummy fuse-link as specified in Figure 104 for the rated current of the fuse-holder. The points at which the temperature rise is measured are marked with A and D in Figure 109.

8.3.5 Acceptability of test results

For terminals, the temperature-rise limits, when the fuse-base is fitted with conductors having a cross-section as indicated in Table 17 of IEC 60269-1:2024 for the corresponding rated current of the fuse-base, shall comply with Table 106.

Documents
Document Sharing Hub
Full document details: IEC 60269-3 2024 CMV

The power dissipation of the fuse-link shall not exceed the values specified in Table 101.

8.4.3.1 Verification of conventional non-fusing and fusing current

This test shall be performed using a test rig as shown in Figure 105 and Figure 106.

8.4.3.2 Verification of rated current of fuse-links

Three fuse-links are subjected to 100 operating cycles, each cycle comprising a period of 1 h during which the test current flows and a period of 15 min without the current flowing.

The test current of 1,2 I_n ± 2,5 % applies only for fuse-links with rated current <16 A. For fuse-links with rated current ≥16 A these requirements are deemed to be met by test of 8.4.3.2 of IEC 60269-1:2024, with the exception that three samples are tested.

During these cycles, the fuse-links shall not operate. They are allowed to cool down to approximately room temperature and are then loaded with a current equal to 0,9 times I_{nf} shown in Table 2 of IEC 60269-1:2024 and Table 102 of this document. The fuse-links shall not operate within the conventional time shown in Table 2 of IEC 60269-1:2024 and Table 102 of this document.

After the fuses have been allowed to cool down to approximately room temperature, they are loaded with I_f. The fuse-links shall operate within the conventional time.

8.4.3.5 Conventional cable overload protection test

The test procedure described under 8.4.3.5 of IEC 60269-1:2024 is not valid for fuses <16A.

NOTE (for gG fuses only) The tests in IEC 60269-1 are deemed to give satisfactory results at 1,45 I_n in typical applications at an ambient temperature of 30 °C. A special test may be required by some countries to prove that fuses and MCBs are equivalent protective devices. Details of the special test are given in Annex AA of this document.

8.4.3.6 Operation of indicating devices and strikers, if any

In addition to IEC 60269-1 concerning indicating devices, the following applies.

If the test is performed at reduced voltages, the test circuit voltage shall be 100 V ± 5 V and the test current shall be 2 × I_f $^{+20}_{0}$ %.

8.5.1 Arrangement of the fuse

In case of fuse-bases for busbar mounting, busbars with the biggest dimensions as specified by the manufacturer shall be used.

8.5.2 Characteristics of the test circuit

For the test with DC current, Table 21 of IEC 60269-1:2024 applies, with the exception given in Table 112.

Table 112 – Test according to 8.5.5.1

	No. 1, No. 2	No. 3, No. 4, No. 5
Time constant	15 $^{+5}_{0}$ ms [a]	≤3 ms
[a] The above-mentioned time-constant is within the limits given in IEC 60269-1.		

Documents
Document Sharing Hub
Full document details: IEC 60269-3 2024 CMV

8.5.5 Test method

8.5.5.1 In order to verify that the fuse satisfies the conditions of 7.5 of IEC 60269-1:2024, tests in accordance with Table 20 of IEC 60269-1:2024 shall be made. An alternative test to tests Nos. 1 and 2 of Table 20 is given in Annex BB.

8.5.8 Acceptability of test results

In addition to 8.5.8 of IEC 60269-1:2024, the following applies.

After this test, the end caps of the fuse-links may have small holes, blisters, spots and localized bulging as long as the gauge-piece and the fuse-carrier are not damaged. Blackening of the inspection window; if any, is ignored.

8.7.4 Verification of overcurrent discrimination

The samples are arranged as for breaking-capacity test according to 8.5 of IEC 60269-1.

Two samples are tested at the current I_{min} and two others at the current I_{max}. The current values are given in Table 113.

The AC test voltage is: $\frac{1{,}1 \times U_n}{\sqrt{3}}$

The other characteristics of the test circuit are the same as for the breaking-capacity test No. 2 (see Table 20 of IEC 60269-1:2006).

The evaluated I^2t values shall meet the I^2t limits specified in Table 113.

Table 113 – Test currents and I^2t limits for the discrimination test

Minimum pre-arcing I^2t value			Operating I^2t value		Selectivity ratio
I_n	Prospective I_{min}	I^2t_{min}	Prospective I_{max}	I^2t_{max}	
A	kA RMS	A^2s	kA RMS	A^2s	
2	0,013	0,67	0,064	16,4	
4	0,035	4,90	0,130	67,6	
6	0,064	16,40	0,220	193,6	
10	0,130	67,60	0,400	640,0	
13	0,200	160,0	0.480	922,0	
16	0,270	291,00	0,550	1 210,0	1:1,6
20	0,400	640,00	0,790	2 500,0	
25	0,550	1 210,00	1,000	4 000,0	
32	0,790	2 500,00	1,200	5 750,0	
35	0,870	3 030,00	1,300	6 750,0	
40	1,000	4 000,00	1,500	9 000,0	
50	1,200	5 750,00	1,850	13 700,0	
63	1,500	9 000,00	2,300	21 200,0	
80	1,850	13 700,00	3,000	36 000,0	
100	2,300	21 200,00	4,000	64 000,0	

AVA Documents
Document Sharing Hub
Full document details: IEC 60269-3 2024 CMV

The pre-arcing I^2t values measured at the test current I_{min} shall be higher than the I^2t value, specified in column 3 of Table 113. The operating I^2t values measured at the test current I_{max} shall be lower than I^2t values specified in column 5 of Table 113.

8.9 Verification of resistance to heat

8.9.1 Fuse-base

The test is carried out only on fuse-bases of non-ceramic insulating material.

8.9.1.1 Test arrangement

The fuse-base to be tested is fitted with a dummy fuse-link according to Figure 104, whose power dissipation at test current lies within the limits indicated in Table 114.

The torque applied to the fuse-carrier shall be two-thirds of the torque specified in Table 115. The cross-sectional area of the conductors connected depends on the maximum rated current of the largest fuse-link to be inserted in the fuse-base (see IEC 60269-1:2024, Table 17). In case of fuse-bases for busbar mounting, the busbars with the smallest dimensions as specified by the manufacturer shall be used.

Table 114 – Power dissipation of a dummy fuse-link at rated and conventional fusing currents including tolerances

Size		D01	D02	D03	DII	DIII	DIV
Power dissipation at I_n	W	2,5	5,5	7,0	4,0	7,0	9,0
Power dissipation at test current If [a]	W	6,7	14,1	17,9	10,3	17,9	23,0
Force applied to the dummy fuse-link	N	35,0	50,0	75,0	50,0	75,0	110,0

[a] For these values a tolerance of ±3 % applies.

The fuse is placed in a test arrangement according to Figure 107 and placed in a heating chamber, the holes provided for the passage of conductors are sealed. The length of the connected conductors shall be at least 1 m outside the heating chamber. The heating chamber must be such that during the test, the air temperature is kept at 80 °C ± 5 °C, measured in the plane of the sample at a distance of approximately 15 cm.

8.9.1.2 Test method

The air temperature in the heating chamber is raised to 80 °C ± 5 °C and is maintained for 2 h. Immediately afterwards, but while maintaining the temperature of the heating chamber, the sample is loaded with a test current corresponding to approximately I_f. At this test current the power dissipation of the dummy fuse-link shall lie within the limits indicated in Table 114. The current shall be kept constant during the whole test duration of 2 h. At the end of the test, a weight is applied straight and not jerkily at position 4 (see Figure 107), which (taking into account the lever-arm relations) generates along arrow G a force according to Table 114 on the dummy fuse-link. To apply the force, the inspection window has to be removed. The sample may be connected to a reduced voltage source ~~(≥42 V)~~.

8.9.1.3 Acceptability of test results

After applying the force, a current shall continue to flow through the sample. The force is maintained for 15 min and the current shall continue to flow unchanged through the sample. Furthermore, after this test, the fuse-base shall not show any damage impairing its further use.

Documents
Document Sharing Hub
Full document details: IEC 60269-3 2024 CMV

8.9.2 Fuse-carrier

8.9.2.1 Test arrangement

A fuse-base shall be mounted on a 15 mm thick plywood board. The arrangement shall be the same as in normal use. The fuse-base is fitted with a dummy fuse-link according to Figure 104. The cross-sectional area of conductors depends on the rated current of the fuse-base (see IEC 60269-1:2024, Table 17). The length of the conductors shall be at least 1 m outside the heating chamber in which the test arrangement is to be placed.

The torque applied to the fuse-carrier shall correspond to Table 115. For tightening and later loosening of the fuse-carrier, an adapter for the fuse-carrier is used, the interior form of which enables a tight connection to the insulated part of the fuse-carrier. The adapter of the fuse-carrier is tightened with a torque wrench with a square-section shank, as is usual in service (see Figure 108). The nut and the described test device shall be placed in the above-mentioned heating chamber.

8.9.2.2 Test method

The air temperature in the heating chamber is raised to 80 °C ± 5 °C and maintained for 2 h. Immediately afterwards, the fuse is loaded with a test current, corresponding to approximately I_f, for 2 h and the test current ~~must~~ shall **17** be adjusted in such a way that the power dissipation of the dummy fuse-link lies within the limits indicated in Table 114.

The test current shall be kept constant during the 2 h test. Immediately after the opening of the test chamber, the nut heated up during the test is fitted to the torque wrench, and with this torque wrench, the fuse-carrier is loosened twice and tightened again.

8.9.2.3 Acceptability of test results

After this test, the fuse-carrier shall show no damage impairing its further use; especially, the insulating material shall not show any fissures or inadmissible shrinkage.

8.10 Verification of non-deterioration of contacts

Subclause 8.10 of IEC 60269-1:2024 applies.

8.10.1 Arrangement of the fuse

Subclause 8.10.1 of IEC 60269-1:2024 applies, with the following addition.

The dummy fuse-link is given in Figure 104 of this document.

Torques to be applied to the fuse-carrier are equal to 40 % of the values given in Table 115.

8.10.2 Test method

The following wording is added after the first paragraph of 8.10.2 of IEC 60269-1:2024.

The test-current is the conventional non-fusing current.

The load period is 75 % of the conventional time.

The no-load period is 25 % of the conventional time.

The conventional time, as well as the non-fusing current, is stated in Table 2 of IEC 60269-1:2024. A test voltage lower than the rated voltage may be used.

Documents
Document Sharing Hub
Full document details: IEC 60269-3 2024 CMV

During the no-load period, the samples are cooled down to a temperature lower than 35 °C; additional cooling (for example, a fan) is allowed.

The third paragraph of 8.10.2 of IEC 60269-1:2024 is replaced by the following wording.

Before the beginning of the cycling test, the temperature rise of the contacts shall be measured at rated current when steady-state conditions have been obtained. The voltage drop measurement shall be ~~repeated~~ made after 250 cycles and, ~~if necessary, after 750 cycles~~ if equation (1) of 8.10.3 is not met, the measurement must be repeated after 750 cycles (see equation (2) of 8.10.3). **18**

The voltage drop of the contacts is measured after 50, 250 and 750 cycles at direct current of I_m = (0,05 to 0,30) I_n. However, the current I_m has to be chosen in such a way as to give a voltage drop of at least 100 µV.

The tolerance of I_m during the measurement shall not be greater than $^{+10}_{0}$ %. Measuring points are marked in Figure 109.

The resistance of the contact is then determined on the basis of the voltage drop. Before measurement, the sample has to be cooled down to room temperature. If the room temperature during the measurement deviates from 20 °C, the following formula may be applied.

$$R_{20} = \frac{R_T}{1 + \alpha_{20} \times (T - 20)}$$

where

R_{20} is the resistance at temperature 20 °C;

R_T is the resistance at temperature T;

α_{20} is the temperature coefficient.

8.10.3 Acceptability of test results

At the end of 250 cycles (Equation (1)) and at the end of 750 cycles (Equation (2)), the following limits shall not be exceeded.

$$\frac{R_{250} - R_{50}}{R_{50}} \leq 15\ \% \qquad (1)$$

$$\frac{R_{750} - R_{50}}{R_{50}} \leq 40\ \% \qquad (2)$$

Alternatively, the temperature measured according to Figure 109 can be used for verification. As measuring points, the terminating lugs of the fuse-base (Figure 109) should be chosen. In this case, the following limits shall not be exceeded:

After 250 cycles, the measured temperature rise values shall not exceed the temperature rise values measured at the beginning of the cycling test by more than 15 K and after 750 cycles, the measured temperature rise values shall not exceed the temperature rise values measured at the beginning of the test by more than 20 K.

Documents
Document Sharing Hub
Full document details: IEC 60269-3 2024 CMV

8.11 Mechanical and miscellaneous tests

8.11.1 Mechanical strength

8.11.1.1 Mechanical strength of the gauge-piece

8.11.1.1.1 Gauge- piece of size DII and DIII (screw-in gauge-pieces)

Gauge-pieces shall be so constructed that the current-carrying parts are in one piece and that they withstand the mechanical stress occurring in normal use.

Compliance is checked by inspection and by the following tests.

The gauge-piece is screwed into a fuse-base by applying a torque of 1 Nm for 1 min. It is then withdrawn with the aid of the appropriate hand-key. In addition, an axial force of 10 N is applied in both directions between the metal part and the ceramic part of the gauge-piece. The test is made on the gauge-piece as delivered. For gauge-pieces having parts which are cemented or glued together, the test is repeated after the samples have been immersed for 24 h in water at the temperature of 20 °C ± 5 °C, and again after the samples have been conditioned for 1 h at a temperature of 200 °C ± 5 °C.

After these tests, the samples shall show no change impairing their future use; in particular, the thread shall not be damaged and the ceramic parts shall still be securely fixed to each other and shall not be detached from the metal part.

8.11.1.1.2 Gauge-piece of size D01, D02, D03, DIV and D-type push-in gauge-rings

By means of force measurement it is checked whether the resilient grip can hold the gauge-piece with the determined force ≥ 2 N.

8.11.1.2 Mechanical strength of the fuse-carrier

A force of 2,5 N (fuse-carrier D01 and D02) and 5 N (in all other cases) is applied gently to the inspection window from the inside, using a steel rod of 6 mm diameter. The inspection window shall neither break nor be displaced during the test.

A test mandrel, having the maximum diameter of the fuse-link d_3 or d_4 as specified in Figure 110 or Figure 111 is inserted five times in the fuse-carrier. After this test, the test-dummy shown in Figure 126 shall be retained in the fuse-carrier when it is turned upside down.

8.11.1.3 Mechanical strength of the fuse-link

The fuse-links shall have adequate mechanical strength and their contacts shall be securely fixed. For compliance they shall be tested as follows.

The fuse-link is placed in the appropriate fuse-carrier complying with Figure 112, Figure 113 or Figure 114, which is screwed into a fuse-base complying with Figure 118, Figure 119 or Figure 120, a gauge-piece complying with Figure 121, Figure 122 or Figure 123 being in position. The gauge-piece has a diameter d_1 equal to the minimum value specified for the relevant rated current.

The torque applied to the fuse-carrier is equal to that specified in Table 115 and the fuse-carrier is then withdrawn. The fuse-carrier is screwed in and withdrawn five times. After this test, the fuse-link shall show no damage within the meaning of this document. It shall not be possible to remove the fuse-link end caps by hand.

Documents
Document Sharing Hub
Full document details: IEC 60269-3 2024 CMV

8.11.1.4 Mechanical strength of the fuse

The fuse-carrier fitted with a fuse-link complying with the standards is screwed five times into the fuse-base fitted with the gauge-piece by applying a torque as given in Table 115 and withdrawn five times. In case of fuse-bases for busbar mounting, the busbars with the smallest dimensions as specified by the manufacturer shall be used. After this test, the samples shall show no change impairing their further use.

~~NOTE~~ The tests specified in 8.11.1.3 and 8.11.1.4 may be performed at the same time.

Table 115 – Test-torque for mechanical strength

Size	Torque Nm
D01	1,5
D02	1,5
D03	2,5
DII	4,0
DIII	6,5
DIV	10,0

Mechanical strength of screw thread:

For screws, which are operated during the installation of the fuse, including screws of terminals and screws for fixing covers – but not screws for fixing the fuse-base to the supporting surface – the following test is performed.

The screws are tightened and loosened five times in the case of metallic thread and ten times in the case of non-metallic thread by means of a suitable test spanner or screwdriver, applying a torque as indicated in Table 116.

For testing terminal screws, a conductor of the largest cross sectional area specified by the manufacturer or in IEC 60269-1 shall be placed in the terminal. The conductor shall be moved after each operation to present a new surface to the terminal screw.

Table 116 – Mechanical strength of screw-thread

Nominal diameter of thread mm	Torque Nm
≤ 2,6	0,4
> 2,6 ≤ 3,0	0,5
> 3,0 ≤ 3,5	0,8
> 3,5 ≤ 4,0	1,2
> 4,0 ≤ 5,0	2,0
> 5,0 ≤ 6,0	2,5
> 6,0 ≤ 8,0	5,5
> 8,0 ≤ 10,0	7,5

During the test, no change impairing the further use of the screwed connection shall occur.

Documents
Document Sharing Hub
Full document details: IEC 60269-3 2024 CMV

8.11.2.4 Resistance to storage at elevated temperature

8.11.2.4.1 Test arrangement

Three fuse-carriers and three fuse-bases shall be placed in a heating chamber at a temperature of 180 °C ± 5 °C for a period of 168 h for the test on insulating parts other than ceramics supporting current-carrying parts.

Covers shall be placed in a heating chamber at the following temperature for a period of 168 h: 100 °C ± 5 °C.

A complete fuse shall be exposed for 1 h to a temperature of 150 °C ± 5 °C to meet the requirements for cemented parts, sealing compound and colour markings.

8.11.2.4.2 Test method

After cooling down to room temperature the following shall be tested.

One fuse-carrier and fuse-base shall be exposed to humid atmospheric conditions as described in 8.2.2.3.2 of IEC 60269-1:2024. Immediately after this treatment, the insulating properties shall be verified at a test voltage of 2,0 kV, according to 8.2.1, 8.2.2.1 and 8.2.2.3.1 of IEC 60269-1:2024, with the exception of Table 15.

The other two fuse-carriers and fuse-bases shall be tested as follows.

The fuse-carriers fitted with a fuse-link complying with the standards are screwed five times into the fuse-bases fitted with gauge-pieces by applying a torque as given in Table 111 and withdrawn five times.

8.11.2.4.3 Acceptability of test results

After this test, the test samples shall show no change impairing their further use. The mechanical strength, especially of the cemented parts, shall be maintained.

The sealing compound shall not have moved to such an extent that live parts are exposed. After this test, the identification colour shall not have changed appreciably.

8.11.2.6 Dimensions and non-interchangeability

Compliance with 8.1.4 of 60269-1:2024 and 7.1.8. of this document shall be verified by measuring and comparing the dimensions of fuse-links with the related dimensions of the other parts of the fuse.

Documents
Document Sharing Hub
Full document details: IEC 60269-3 2024 CMV

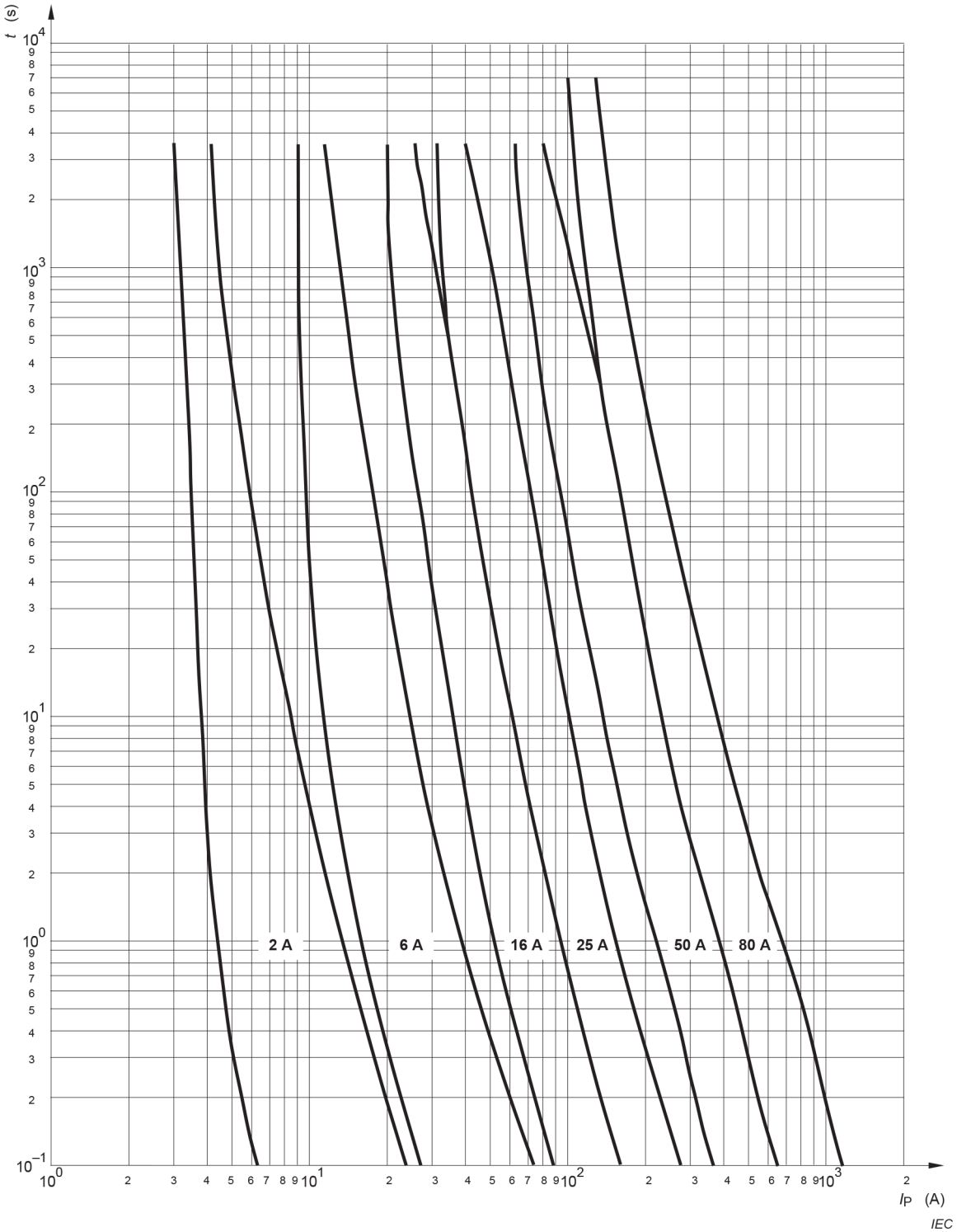

Figure 101 – Time-current zones for "gG" fuse-links

Documents
Document Sharing Hub
Full document details: IEC 60269-3 2024 CMV

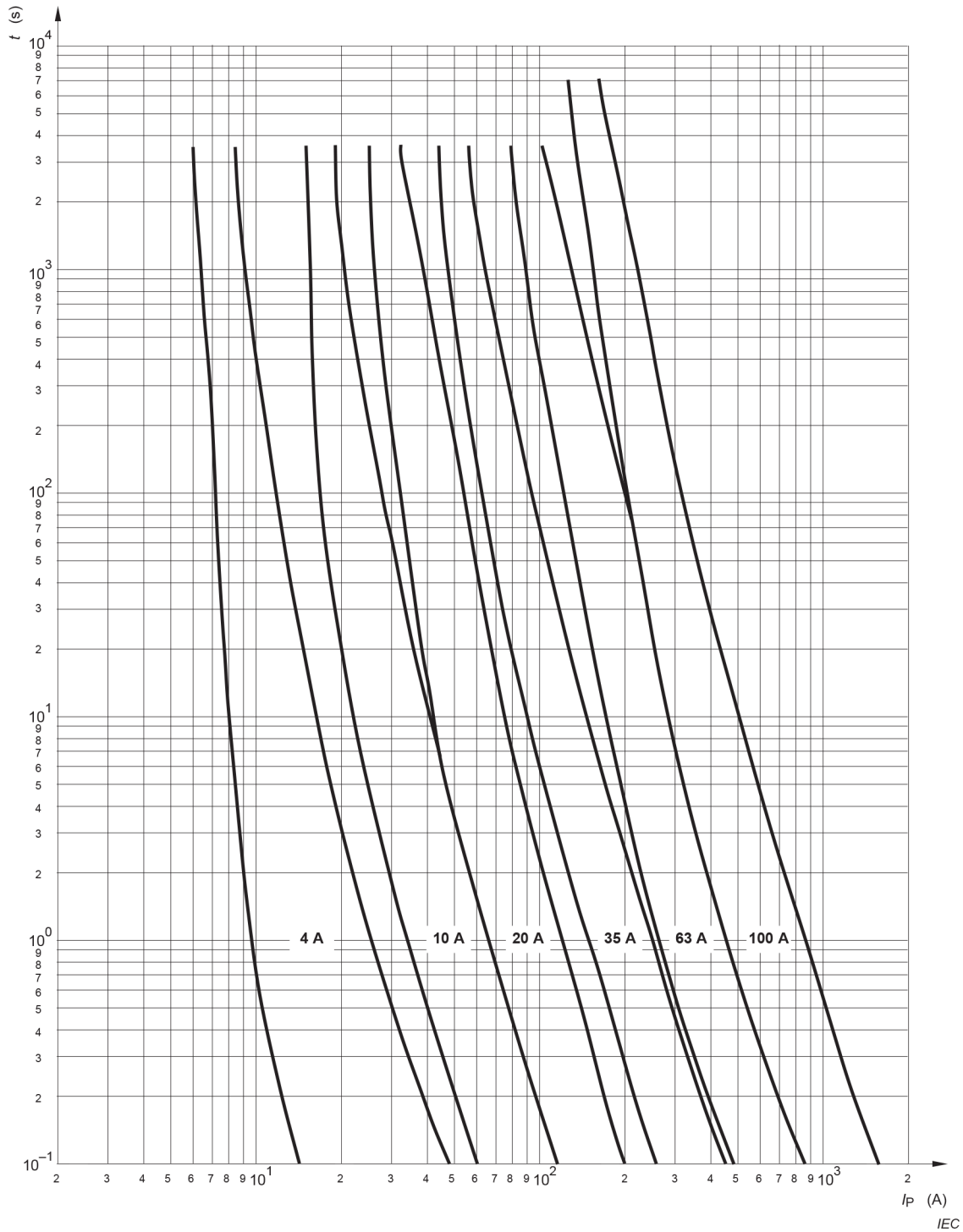

Figure 102 – Time-current zones for "gG" fuse-links

Documents
Document Sharing Hub
Full document details: IEC 60269-3 2024 CMV

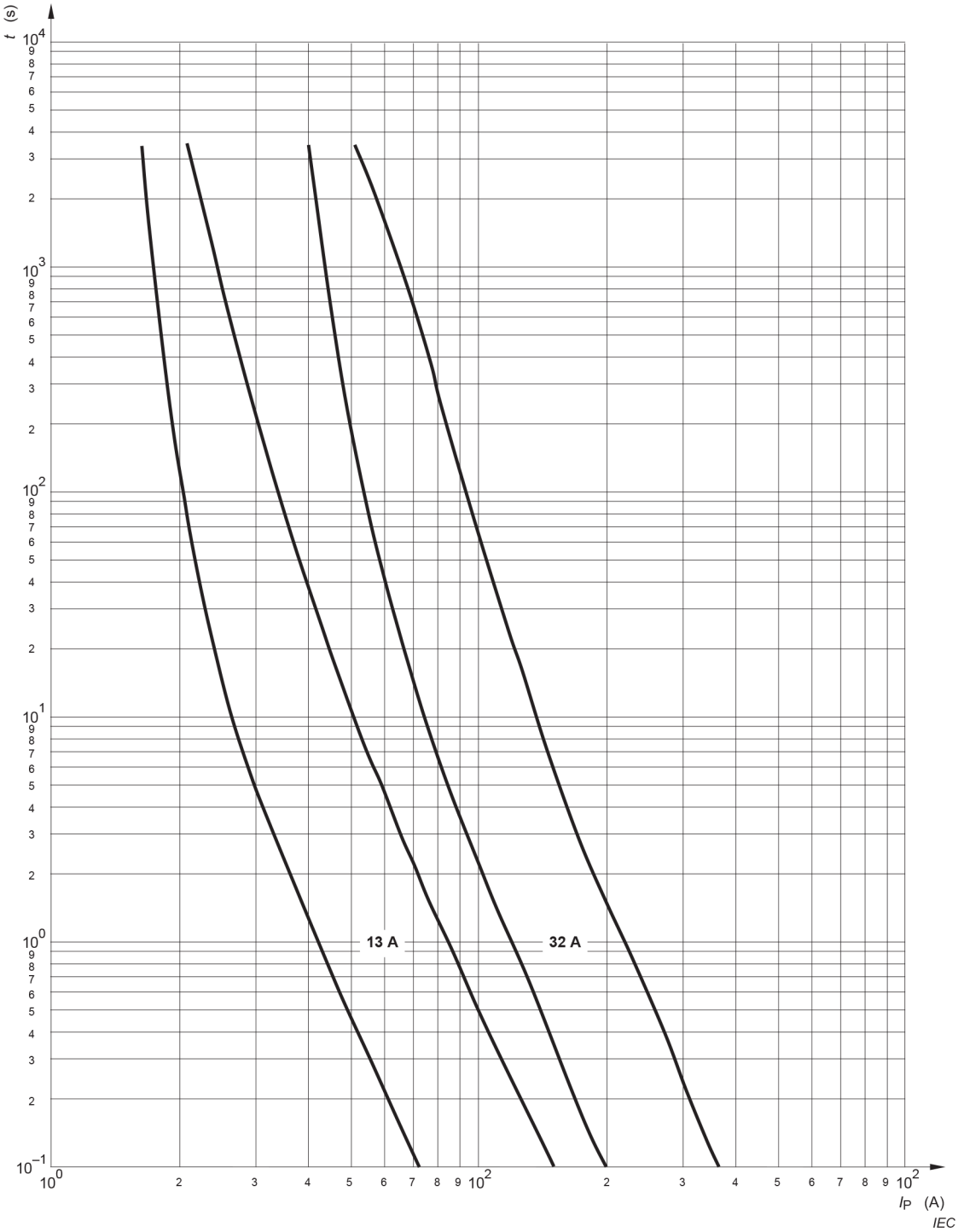

Figure 103 – Time-current zone for "gG" fuse-links 13 A and 32 A

Documents
Document Sharing Hub
Full document details: IEC 60269-3 2024 CMV

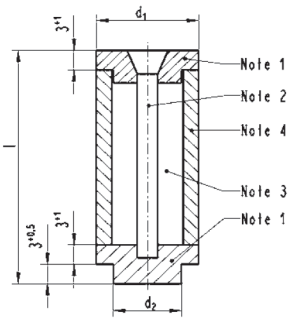

D01 … D03

IEC

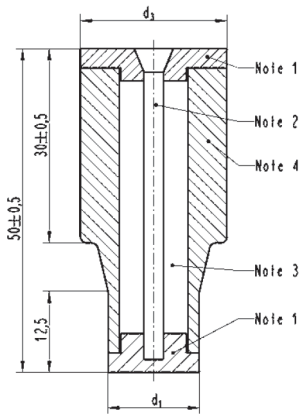

DII, DIII

IEC

Dimensions in millimetres

Size	d_1 $^{0}_{-0,5}$	d_2 $^{0}_{-0,5}$	l ± 0,5
D01	10,5	6	36
D02	15	10	36
D03	22	18	43

Size	d_1 $^{+0,2}_{-0,4}$	d_3 $^{0}_{-1,5}$
DII	14	22,5
DIII	20	28

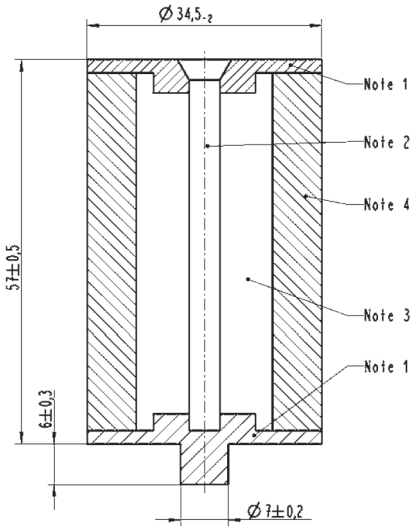

DIV

IEC

NOTE 1 Contact CuZn, silver-plated.

NOTE 2 Cu56Ni44 or an equivalent material with similar values of specific resistance and temperature coefficient.

NOTE 3 Quartz sand.

NOTE 4 Ceramic body.

Figure 104 – Dummy fuse-links according to 8.3 and 8.9.1.1

Documents
Document Sharing Hub
Full document details: IEC 60269-3 2024 CMV

Dimensions in millimetres
Dimension a: see Figure 106

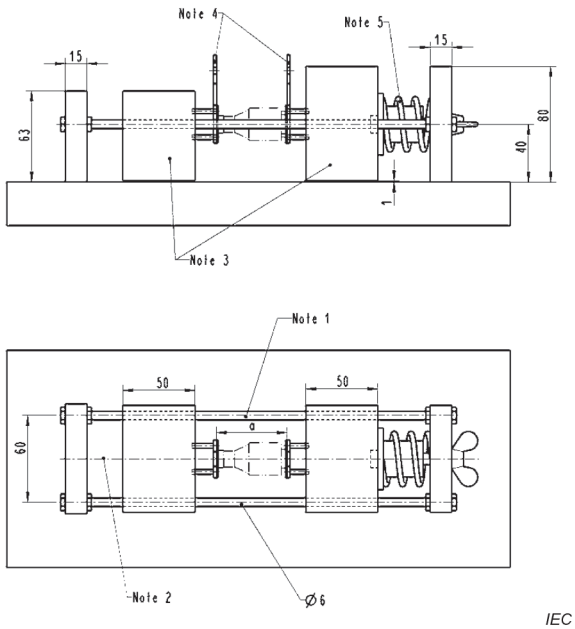

NOTE 1 Metallic rod.

NOTE 2 Distance for adjusting of the contact force.

NOTE 3 Insulating material.

NOTE 4 Silver-plated contact pieces.

NOTE 5 Steel spring.

Figure 105 – Test rigs for fuse-links

Size	Dimensions		Contact force
	a [a] mm	∅ i mm	N
D01	35^{+2}_{0}	11,5	40 ± 10 %
D02	35^{+2}_{0}	16,0	80 ± 10 %
D03	42^{+2}_{0}	23,0	120 ± 10 %
DII	49^{+2}_{0}	14,5	200 ± 10 %
DIII	49^{+2}_{0}	20,5	320 ± 10 %
DIV	$56^{+2,5}_{0}$	–	550 ± 10 %

[a] See Figure 105.

Documents
Document Sharing Hub
Full document details: IEC 60269-3 2024 CMV

Dimensions in millimetres

Silver-plated contact pieces (see Note 4 of Figure 105)

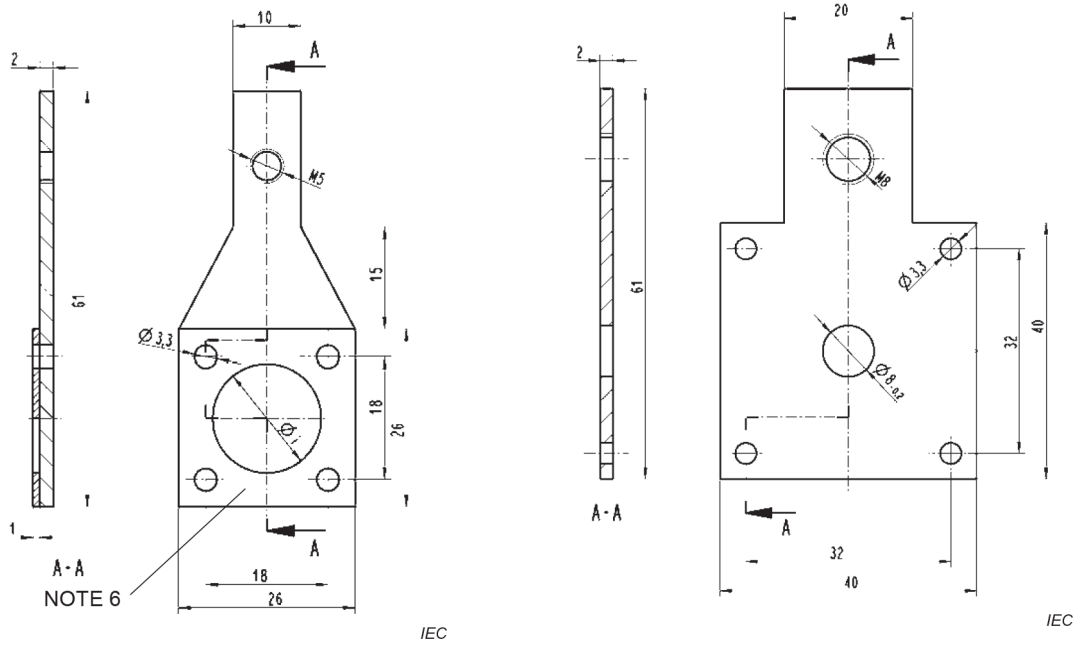

Sizes D01 to D03 and DII, DIII **Size DIV**

NOTE 6 Centring plate of insulating material.

Figure 106 – Test rigs for fuse-links

Documents
Document Sharing Hub
Full document details: IEC 60269-3 2024 CMV

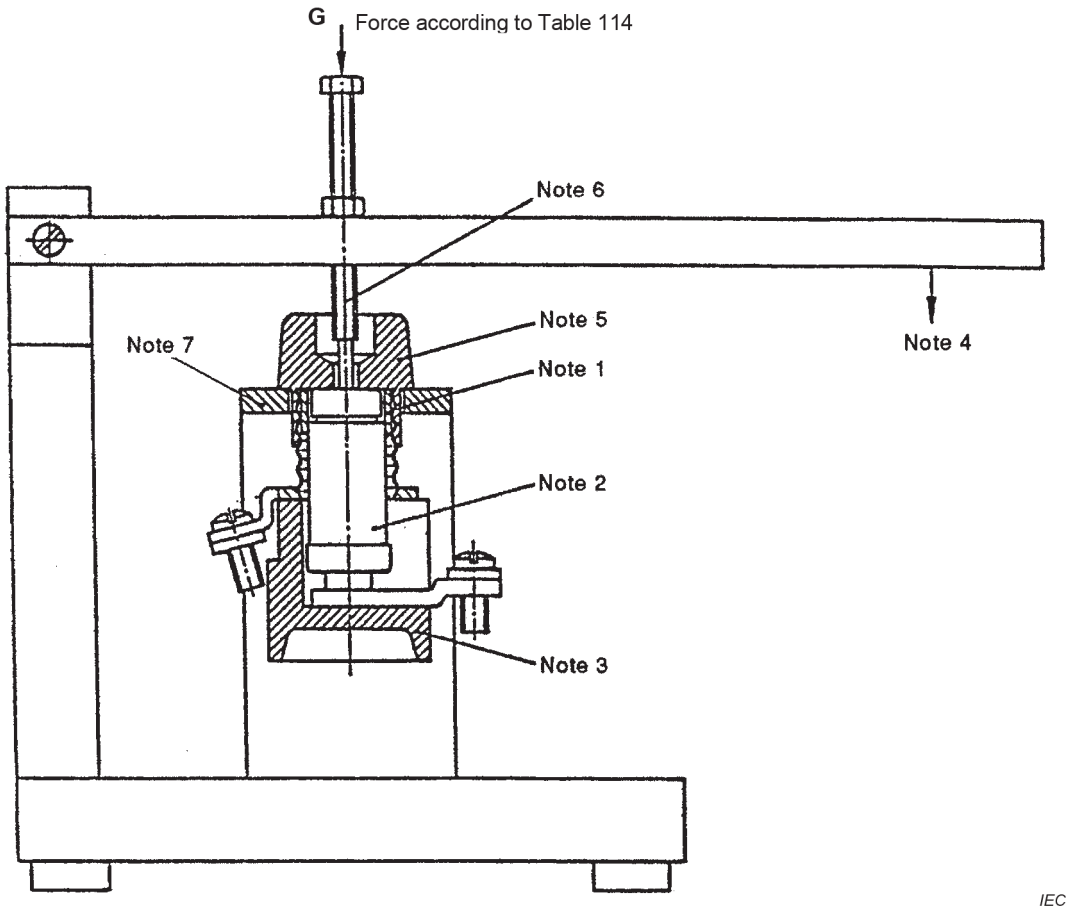

NOTE 1 Isolation between the end-cap and the screwed shell except at the face.

NOTE 2 Dummy fuse-link.

NOTE 3 Fuse-base.

NOTE 4 Direction of the applied force.

NOTE 5 Fuse-carrier.

NOTE 6 Piston.

NOTE 7 Assembly platform.

Figure 107 – Test arrangement for fuse-bases according to 8.9.1.2

Documents
Document Sharing Hub
Full document details: IEC 60269-3 2024 CMV

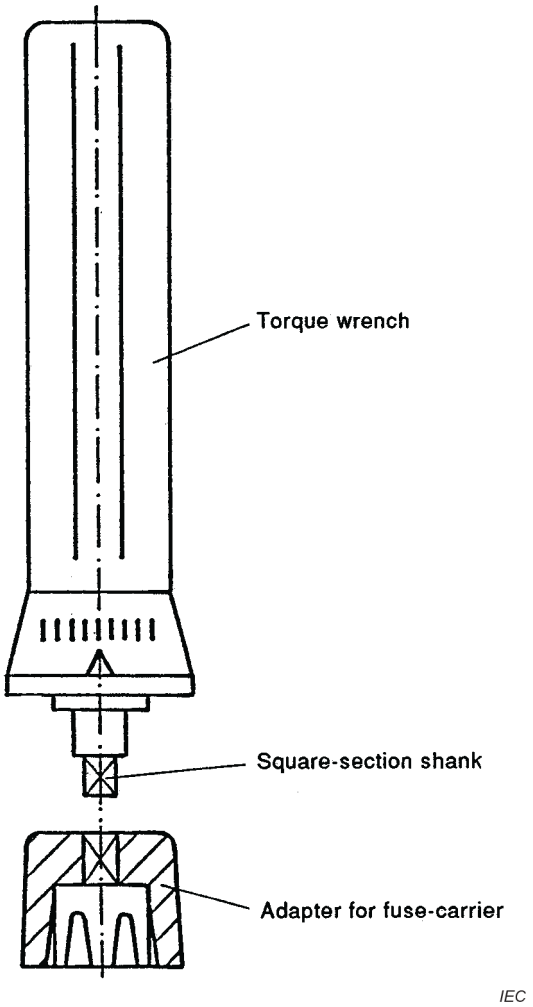

Figure 108 – Example of a torque wrench according to 8.9.2

Documents
Document Sharing Hub
Full document details: IEC 60269-3 2024 CMV

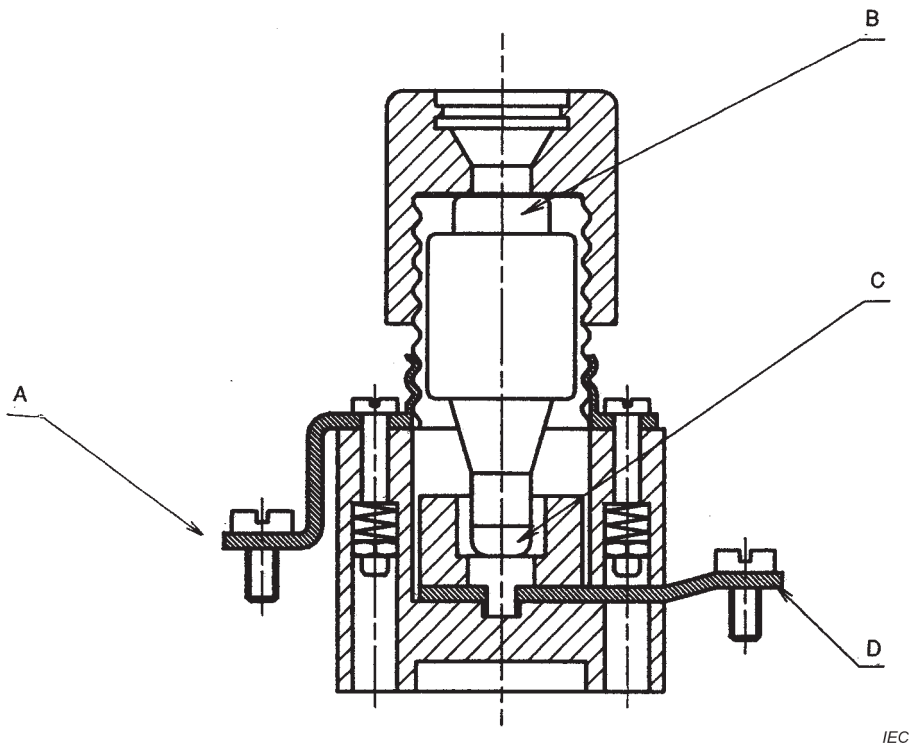

Figure 109 – Measuring points according to 8.3.3, 8.3.4.1 and 8.10.2 of fuse system A

Documents
Document Sharing Hub
Full document details: IEC 60269-3 2024 CMV

Dimensions in millimetres

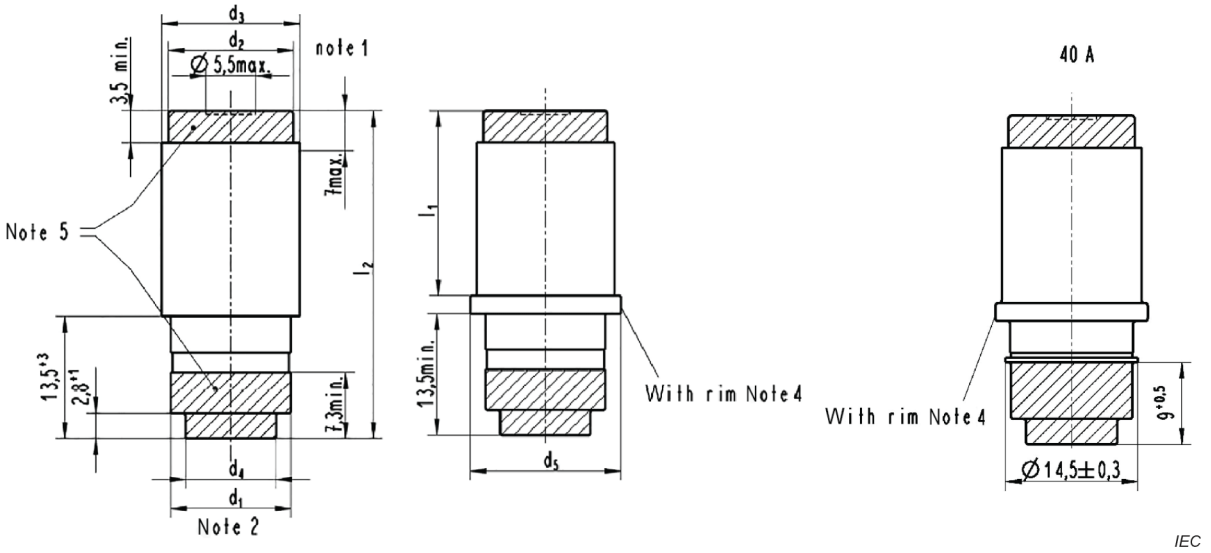

	I_n	d_1 (note 2) ± 0,3	d_2 (min.)	d_3	d_4 (max.)	d_5 (note 4)	l_1 (note 4)	l_2 ± 1	r (max.)
	A	mm	mm	mm	mm	mm	mm	mm	mm
D01	2	7,3	9,8	$11\ ^{0}_{-0,7}$	6	–	–	36	1
	4	7,3							
	6	7,3							
	10	8,5							
	13	8,5							
	16	9,7							
D02	20	10,9	13,8	$15,3\ ^{0}_{-0,8}$	10	16,7 (max)	18,5	36	1
	25	12,1				16,7 max.)			
	32	13,3				16,7 (max)			
	35	13,3				16,7 (max)			
	40	13,3				16,7 (max)			
	50 (note 4)	14,5				$16,7\ ^{0}_{-1,3}$			
	63	15,9				16,7 (max.)			
D03	80 (note 4)	22	20,6	$22,5\ ^{0}_{-1}$	18	$25,6\ ^{0}_{-2,3}$	22,5	43	1,6
	100	25				25,6 (max.)			

NOTE 1 Diameter of fuse-indicator.

NOTE 2 The maximum value of d_1 shall not be exceeded within a range of 13,5 mm.

NOTE 4 Choice of manufacturer, obligatory for 50 A and 80 A. The rim is necessary for the 50 A and 80 A rating to ensure correct insertion. The rim may be used for other ratings in sizes D02 and D03.

NOTE 5 Hatched areas specify contact areas.

Body of the fuse-link of ceramic material.

NOTE 6 The sketches are not intended to govern the design except as regards the dimensions shown.

Figure 110 – Fuse-link, D-type. Sizes D01-D03

Documents
Document Sharing Hub
Full document details: IEC 60269-3 2024 CMV

Dimensions in millimetres

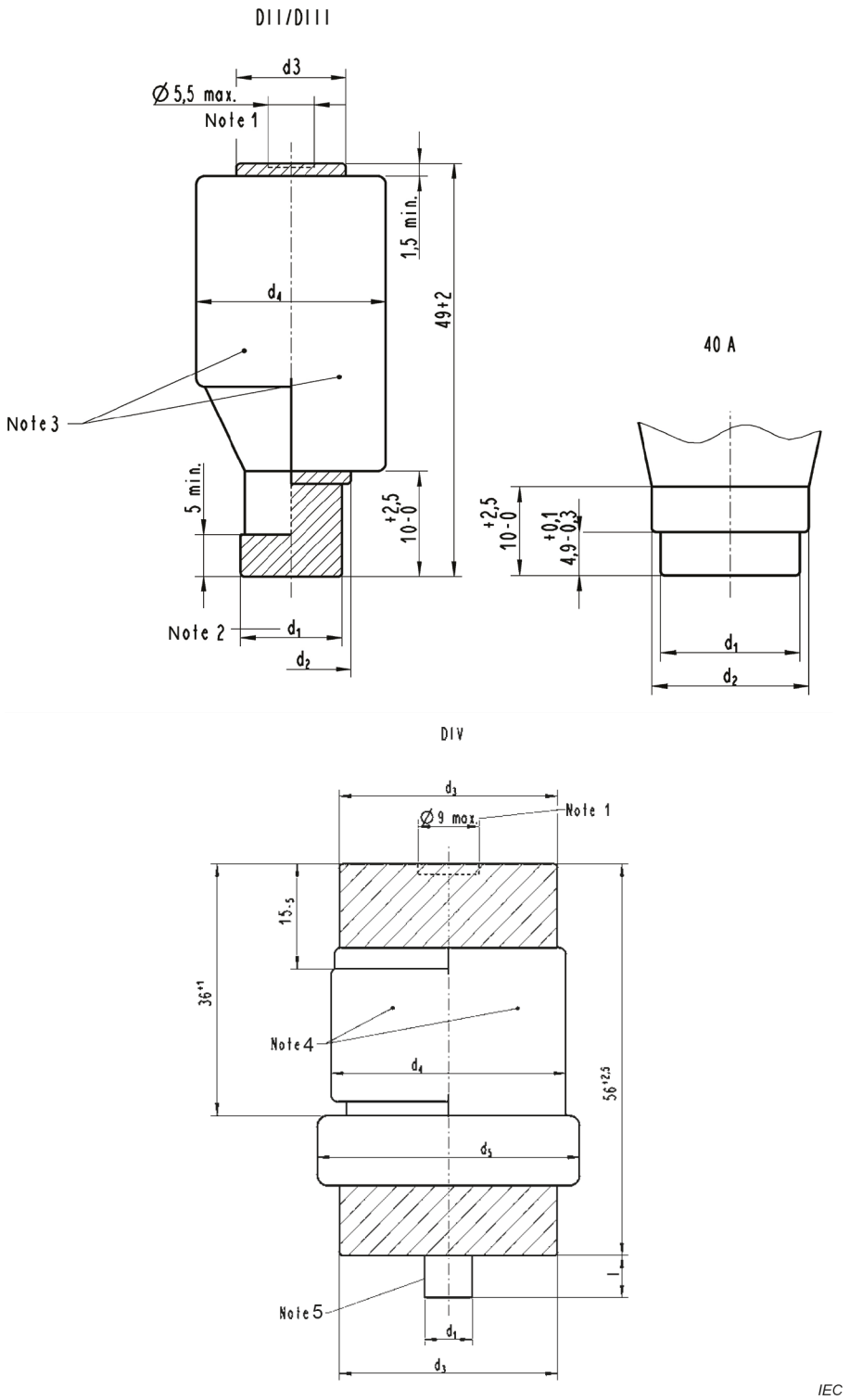

The sketches are not intended to govern the design except as regards the dimensions shown.

Hatched areas specify contact areas.

Body of the fuse-link of ceramic material.

Documents
Document Sharing Hub
Full document details: IEC 60269-3 2024 CMV

	I_n A	d_1 (note 2) mm		d_2 (max.) mm	d_3 mm	d_4 mm	d_5 $^{0}_{-2}$ mm	l ±0,3 mm
DII	2	6	$^{+0,2}_{-0,4}$	14,2	11 min	$22,5\ ^{0}_{-1,5}$	–	–
	4							
	6							
	10	8						
	13							
	16	10			13 min			
	20	12						
	25	14						
DIII	32	16	$^{+0,2}_{-0,4}$	20,2	15 min	$28\ ^{0}_{-2}$	–	–
	35	16	$^{+0,2}_{-0,4}$	20,2	15 min	$28\ ^{0}_{-2}$	–	–
	40	16	±0,2	~~18 ± 0,2~~ 18,2	15 min	$28\ ^{0}_{-2}$	–	–
	50	18	$^{+0,2}_{-0,4}$	20,2	15 min	$28\ ^{0}_{-2}$	–	–
	63	20	$^{+0,2}_{-0,4}$	20,2	15 min	$28\ ^{0}_{-2}$	–	–
DIV	80 (6)	5	±0,2	–	$32\ ^{0}_{-8}$	$34,5\ ^{0}_{-2}$	38,5	6
	100	7						

I_n A	Colour of fuse-indicator
2	Pink
4	Brown
6	Green
10	Red
13	Black
16	Grey
20	Blue
25	Yellow
32	Violet
35	Black
40	Green
50	White
63	Copper
80	Silver
100	Red

NOTE 1 Diameter of fuse-indicator.

NOTE 2 The maximum value of d_1 shall not be exceeded within a range of 10 mm for fuse-links DII and DIII measured from the bottom contact.

NOTE 3 Alternative shape.

NOTE 4 Optional metal cover.

NOTE 5 The gauge-pin is not mandatory for fuse-links with rated current 80 A.

The use of these colours is mandatory also for sizes D01-D03.

Figure 111 – Fuse-link, D-type. Sizes DII-DIV

Documents
Document Sharing Hub

Full document details: IEC 60269-3 2024 CMV

Dimensions in millimetres

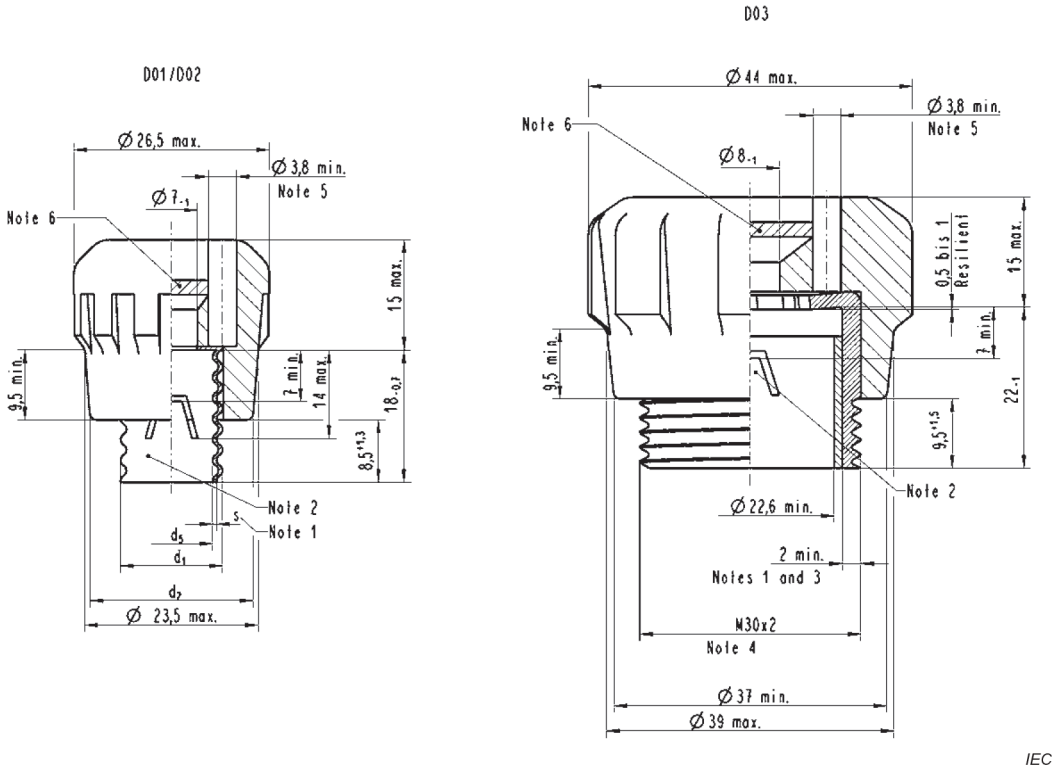

The sketches are not intended to govern the design except as regards the dimensions shown.

Insulating parts of ceramic or other sufficiently heat-resistant material.

	I_n	d_1	d_2 (min.)	d_5 (max.)	s (note 1) (min.)
	A	mm	mm	mm	mm
D01	16	E14	18	11,1	0,27
D02	63	E18	22	15,4	0,37

NOTE 1 Mean value.

NOTE 2 Retaining clip, other retaining means are allowed.

NOTE 3 Tolerance in the first turn of the thread $^{0}_{-0,25}$.

NOTE 4 Thread according to ISO 965-1, class designation 8g.

NOTE 5 The hole for the voltage tester is optional.

NOTE 6 Material: glass or other suitable transparent material.

Figure 112 – Fuse-carrier, D-type. Sizes D01-D03

Documents
Document Sharing Hub
Full document details: IEC 60269-3 2024 CMV