IEC 60269-4

Edition 6.0 2024-08
COMMENTED VERSION

INTERNATIONAL STANDARD

colour inside

Low-voltage fuses –
Part 4: Supplementary requirements for fuse-links for the protection of semiconductor devices

IEC 60269-4:2024-08 CMV(en)

Documents
Document Sharing Hub

Full document details: IEC 60269-4 2024 CMV

THIS PUBLICATION IS COPYRIGHT PROTECTED
Copyright © 2024 IEC, Geneva, Switzerland

All rights reserved. Unless otherwise specified, no part of this publication may be reproduced or utilized in any form or by any means, electronic or mechanical, including photocopying and microfilm, without permission in writing from either IEC or IEC's member National Committee in the country of the requester. If you have any questions about IEC copyright or have an enquiry about obtaining additional rights to this publication, please contact the address below or your local IEC member National Committee for further information.

IEC Secretariat
3, rue de Varembé
CH-1211 Geneva 20
Switzerland

Tel.: +41 22 919 02 11
info@iec.ch
www.iec.ch

About the IEC
The International Electrotechnical Commission (IEC) is the leading global organization that prepares and publishes International Standards for all electrical, electronic and related technologies.

About IEC publications
The technical content of IEC publications is kept under constant review by the IEC. Please make sure that you have the latest edition, a corrigendum or an amendment might have been published.

IEC publications search - webstore.iec.ch/advsearchform
The advanced search enables to find IEC publications by a variety of criteria (reference number, text, technical committee, …). It also gives information on projects, replaced and withdrawn publications.

IEC Just Published - webstore.iec.ch/justpublished
Stay up to date on all new IEC publications. Just Published details all new publications released. Available online and once a month by email.

IEC Customer Service Centre - webstore.iec.ch/csc
If you wish to give us your feedback on this publication or need further assistance, please contact the Customer Service Centre: sales@iec.ch.

IEC Products & Services Portal - products.iec.ch
Discover our powerful search engine and read freely all the publications previews, graphical symbols and the glossary. With a subscription you will always have access to up to date content tailored to your needs.

Electropedia - www.electropedia.org
The world's leading online dictionary on electrotechnology, containing more than 22 500 terminological entries in English and French, with equivalent terms in 25 additional languages. Also known as the International Electrotechnical Vocabulary (IEV) online.

Documents
Document Sharing Hub

Full document details: IEC 60269-4 2024 CMV

IEC 60269-4

Edition 6.0 2024-08
COMMENTED VERSION

INTERNATIONAL STANDARD

colour inside

Low-voltage fuses –
Part 4: Supplementary requirements for fuse-links for the protection of semiconductor devices

INTERNATIONAL
ELECTROTECHNICAL
COMMISSION

ICS 29.120.50

ISBN 978-2-8322-9552-6

Warning! Make sure that you obtained this publication from an authorized distributor.

® Registered trademark of the International Electrotechnical Commission

Documents
Document Sharing Hub

Full document details: IEC 60269-4 2024 CMV

CONTENTS

FOREWORD 4
1 ~~General~~ Scope 7
2 Normative references 8
3 Terms and definitions 8
4 Conditions for operation in service 9
5 Classification 11
6 Characteristics of fuses 11
7 Markings 16
8 Standard conditions for construction 16
9 Tests 17
Annex AA (informative) Guidance for the coordination of fuse-links with semiconductor devices 29
Annex BB (normative) Survey on information to be supplied by the manufacturer in his literature (catalogue) or on request for a fuse designed for the protection of semiconductor devices 35
Annex CC (normative) Examples of standardized fuse-links for the protection of semiconductor devices 36
Bibliography 55
List of comments 56

~~Figure 101 – Conventional overload curve (example) (X and Y are points of verified overload capability) ....~~
Figure 101 – Example of a conventional test arrangement for bolted fuse-links 27
Figure 102 – Example of a conventional test arrangement for blade contact fuse-links 28
Figure CC.1 – Single body fuse-links 37
Figure CC.2 – Double body fuse-links 38
Figure CC.3 – Twin body fuse-links 39
Figure CC.4 – Striker fuse-links 39
Figure CC.5 – Fuse-links with bolted connections, type B, body sizes 000 and 00 42
Figure CC.6 – Fuse-links with bolted connections, type B, body sizes 0, 1, 2 and 3 44
Figure CC.7 – Bolted fuse-links, type C 46
Figure CC.8 – Flush end fuse-links, type A 48
Figure CC.9 – Flush end fuse-links, type B 50
Figure CC.10 – Fuse-links with cylindrical contact caps, type A 51
Figure CC.11 – Fuse-links with cylindrical contact caps, type B 53
Figure CC.12 – Fuse-links with cylindrical contact caps with striker, type B (additional dimensions for all sizes except 10 × 38) 54

Table 101 – Conventional time and current for "gR" and "gS" fuse-links 13
Table 102 – List of complete tests 18
Table 103 – Survey of tests on fuse-links of the smallest rated current of a homogeneous series 18
Table 107 – Cross-sectional area of copper conductors for high current ratings tests 19
Table 104 – Values for breaking-capacity tests on AC fuses 23

AVA Documents
Document Sharing Hub
Full document details: IEC 60269-4 2024 CMV

Table 105 – Values for breaking-capacity tests on DC fuses.....24
Table 106 – Values for breaking-capacity tests on VSI fuse-links.....24
~~Table CC.1 – Conventional time and current for "gR" and "gS" fuse-links.....~~
~~Table CC.2 – Conventional time and current for "gR" and "gS" fuse-links.....~~
~~Table CC.4 – Conventional time and current for "gR" and "gS" fuse-links.....~~
Table CC.1 – Typical rated voltages and preferred maximum rated currents.....52

Documents
Document Sharing Hub
Full document details: IEC 60269-4 2024 CMV

INTERNATIONAL ELECTROTECHNICAL COMMISSION

LOW-VOLTAGE FUSES –

Part 4: Supplementary requirements for fuse-links for the protection of semiconductor devices

FOREWORD

1) The International Electrotechnical Commission (IEC) is a worldwide organization for standardization comprising all national electrotechnical committees (IEC National Committees). The object of IEC is to promote international co-operation on all questions concerning standardization in the electrical and electronic fields. To this end and in addition to other activities, IEC publishes International Standards, Technical Specifications, Technical Reports, Publicly Available Specifications (PAS) and Guides (hereafter referred to as "IEC Publication(s)"). Their preparation is entrusted to technical committees; any IEC National Committee interested in the subject dealt with may participate in this preparatory work. International, governmental and non-governmental organizations liaising with the IEC also participate in this preparation. IEC collaborates closely with the International Organization for Standardization (ISO) in accordance with conditions determined by agreement between the two organizations.

2) The formal decisions or agreements of IEC on technical matters express, as nearly as possible, an international consensus of opinion on the relevant subjects since each technical committee has representation from all interested IEC National Committees.

3) IEC Publications have the form of recommendations for international use and are accepted by IEC National Committees in that sense. While all reasonable efforts are made to ensure that the technical content of IEC Publications is accurate, IEC cannot be held responsible for the way in which they are used or for any misinterpretation by any end user.

4) In order to promote international uniformity, IEC National Committees undertake to apply IEC Publications transparently to the maximum extent possible in their national and regional publications. Any divergence between any IEC Publication and the corresponding national or regional publication shall be clearly indicated in the latter.

5) IEC itself does not provide any attestation of conformity. Independent certification bodies provide conformity assessment services and, in some areas, access to IEC marks of conformity. IEC is not responsible for any services carried out by independent certification bodies.

6) All users should ensure that they have the latest edition of this publication.

7) No liability shall attach to IEC or its directors, employees, servants or agents including individual experts and members of its technical committees and IEC National Committees for any personal injury, property damage or other damage of any nature whatsoever, whether direct or indirect, or for costs (including legal fees) and expenses arising out of the publication, use of, or reliance upon, this IEC Publication or any other IEC Publications.

8) Attention is drawn to the Normative references cited in this publication. Use of the referenced publications is indispensable for the correct application of this publication.

9) IEC draws attention to the possibility that the implementation of this document may involve the use of (a) patent(s). IEC takes no position concerning the evidence, validity or applicability of any claimed patent rights in respect thereof. As of the date of publication of this document, IEC had not received notice of (a) patent(s), which may be required to implement this document. However, implementers are cautioned that this may not represent the latest information, which may be obtained from the patent database available at https://patents.iec.ch. IEC shall not be held responsible for identifying any or all such patent rights.

This commented version (CMV) of the official standard IEC 60269-4:2024 edition 6.0 allows the user to identify the changes made to the previous IEC 60269-4:2009+AMD1:2012+AMD2:2016 CSV edition 5.2. Furthermore, comments from IEC SC 32B experts are provided to explain the reasons of the most relevant changes, or to clarify any part of the content.

A vertical bar appears in the margin wherever a change has been made. Additions are in green text, deletions are in strikethrough red text. Experts' comments are identified by a blue-background number. Mouse over a number to display a pop-up note with the comment.

This publication contains the CMV and the official standard. The full list of comments is available at the end of the CMV.

Documents
Document Sharing Hub

Full document details: IEC 60269-4 2024 CMV

IEC 60269-4 has been prepared by subcommittee 32B: Low-voltage fuses, of IEC technical committee 32: Fuses. It is an International Standard.

This sixth edition cancels and replaces the fifth edition published in 2009, Amendment 1:2012 and Amendment 2:2016. This edition constitutes a technical revision.

This edition includes the following significant technical changes with respect to the previous edition:

a) the introduction of voltage source inverter fuse-links, including test requirements.
b) coverage of the tests on operating characteristics for AC. by the breaking capacity tests.
c) the updating of examples of standardised fuse-links for the protection of semiconductor devices.

The text of this International Standard is based on the following documents:

Draft	Report on voting
32B/746/FDIS	32B/753/RVD

Full information on the voting for its approval can be found in the report on voting indicated in the above table.

The language used for the development of this International Standard is English.

This document was drafted in accordance with ISO/IEC Directives, Part 2, and developed in accordance with ISO/IEC Directives, Part 1 and ISO/IEC Directives, IEC Supplement, available at www.iec.ch/members_experts/refdocs. The main document types developed by IEC are described in greater detail at www.iec.ch/publications.

This part is to be used in conjunction with IEC 60269-1:2024, *Low-voltage fuses – Part 1: General requirements*.

This Part 4 supplements or modifies the corresponding clauses or subclauses of Part 1.

Where no change is necessary, this Part 4 indicates that the relevant clause or subclause applies.

Tables and figures which are additional to those in Part 1 are numbered starting from 101.

Additional annexes are lettered AA, BB, etc.

A list of all parts of the IEC 60269 series, under the general title: *Low-voltage fuses*, can be found on the IEC website.

Documents
Document Sharing Hub

Full document details: IEC 60269-4 2024 CMV

The committee has decided that the contents of this document will remain unchanged until the stability date indicated on the IEC website under webstore.iec.ch in the data related to the specific document. At this date, the document will be

- reconfirmed,
- withdrawn, or
- revised.

IMPORTANT – The "colour inside" logo on the cover page of this document indicates that it contains colours which are considered to be useful for the correct understanding of its contents. Users should therefore print this document using a colour printer.

Documents
Document Sharing Hub

Full document details: IEC 60269-4 2024 CMV

LOW-VOLTAGE FUSES –

Part 4: Supplementary requirements for fuse-links for the protection of semiconductor devices

1 ~~General~~ Scope 1

IEC 60269-1 applies with the following supplementary requirements.

Fuse-links for the protection of semiconductor devices shall comply with all requirements of IEC 60269-1, if not otherwise indicated hereinafter, and shall also comply with the supplementary requirements laid down below.

~~1.1 Scope and object~~

These supplementary requirements apply to fuse-links for application in equipment containing semiconductor devices for circuits of nominal voltages up to 1 000 V AC or 1 500 V DC~~ and also, in so far as they are applicable, for circuits of higher nominal voltages~~. For some fuse-links higher rated voltages can be used. 2

NOTE ~~1~~ Such fuse-links are commonly referred to as "semiconductor fuse-links".

~~NOTE 2 In most cases, a part of the associated equipment serves the purpose of a fuse-base. Owing to the great variety of equipment, no general rules can be given; the suitability of the associated equipment to serve as a fuse-base should be subject to agreement between the manufacturer and the user. However, if separate fuse-bases or fuse-holders are used, they should comply with the appropriate requirements of IEC 60269-1.~~

~~NOTE 3 IEC 60269-6 (Low-voltage fuses – Part 6: Supplementary requirements for fuse-links for the protection of solar photovoltaic energy systems) is dedicated to the protection of solar photovoltaic energy systems.~~

~~NOTE 4 These fuse-links are intended for use on systems employing the standardized voltages and tolerances of IEC 60038. Tests carried out on fuse-links in accordance with previous editions of this standard shall remain valid until such time as complimentary equipment has evolved to the standardized voltages and tolerances of IEC 60038.~~ 3

The object of these supplementary requirements is to establish the characteristics of semiconductor fuse-links in such a way that they can be replaced by other fuse-links having the same characteristics, provided that their dimensions are identical. For this purpose, this standard refers in particular to

a) the following characteristics of fuses:
   1) their rated values
   2) their temperature rises in normal service
   3) their power dissipation
   4) their time-current characteristics
   5) their breaking capacity
   6) their cut-off current characteristics and their I^2t characteristics
   7) their arc voltage characteristics
b) type tests for verification of the characteristics of fuses
c) the markings on fuses
d) availability and presentation of technical data (see Annex BB).

Documents
Document Sharing Hub
Full document details: IEC 60269-4 2024 CMV

2 Normative references 4

The following documents are referred to in the text in such a way that some or all of their content constitutes requirements of this document. For dated references, only the edition cited applies. For undated references, the latest edition of the referenced document (including any amendments) applies.

IEC 60269-1:2024, *Low-voltage fuses – Part 1: General requirements*

IEC 60269-2:2013, *Low-voltage fuses – Part 2: Supplementary requirements for fuses for use by authorized persons (fuses mainly for industrial application) – Examples of standardized systems of fuses A to K*
IEC 60269-2:2013/AMD1:2016
IEC 60269-2:2013/AMD2:2024

~~IEC 60269-3, *Low-voltage fuses – Supplementary requirements for fuses for use by unskilled persons (fuses mainly for household and similar applications) – Examples of standardized systems of fuses A to F*~~

IEC TR 60269-5:2014, *Low-voltage fuses – Part 5: Guidance for the application of low-voltage fuses*
IEC TR 60269-5:2014/AMD1:2020

~~IEC 60269-6, *Low-voltage fuses – Part 6: Supplementary requirements for fuse-links for the protection of solar photovoltaic energy systems*~~

IEC 60417, *Graphical symbols for use on equipment*

~~IEC 60664-1:2000, *Insulation coordination for equipment within low-voltage systems – Part 1: Principles, requirements and tests*~~

ISO 3, *Preferred numbers – Series of preferred numbers*

3 Terms and definitions

IEC 60269-1 applies with the following supplementary definitions.

3.2 General terms

3.2.101
semiconductor device
device whose essential characteristics are due to the flow of charge carriers within a semiconductor.

[SOURCE: IEC 60050-521:2002, 521-04-01]

3.2.102
semiconductor fuse-link
current-limiting fuse-link capable of breaking, under specific conditions, any current value within the breaking range (see 8.4)

3.2.103
signalling device
device forming part of the fuse and signalling the fuse operation to a remote place

Note 1 to entry: A signalling device consists of a striker and an auxiliary switch. Electronic devices may also be used.

AVA Documents Document Sharing Hub

3.2.104
voltage source inverter
VSI
a voltage stiff inverter

Note 1 to entry: Also referred to as a voltage stiff inverter i.e. an inverter that supplies current without any practical change in its output voltage.

[SOURCE: IEC 60050-551:1998, 551-12-11] 5

3.2.105
voltage source inverter fuse-link
VSI fuse-link
current-limiting fuse-link capable of breaking, under specified conditions, the short circuit current supplied by the discharge of a DC-link capacitor in a voltage source inverter

Note 1 to entry: The abbreviation "VSI fuse-link" is used in this document.

Note 2 to entry: A VSI fuse-link usually operates under a short circuit current supplied by the discharge of a DC-link capacitor through a very low inductance, in order to allow high frequency in normal operation. This short circuit condition leads to a very high rate of rise of current equivalent to a very low value of time constant, typically 3 ms or less. The supply voltage is DC, even though the applied voltage decreases as the current increases during the short circuit.

Note 3 to entry: In some multiple AC drive applications, individual output inverters may be remote from the main input rectifier. In these cases, the associated fault circuit impedances may influence the operation of the fuse-links. – the associated time constant and the size of the capacitors need to be considered when choosing the appropriate short circuit protection.

4 Conditions for operation in service

IEC 60269-1 applies with the following supplementary requirements.

Fuses must be only used according to their rated values. 6

4.5 Voltage

4.5.1 Rated voltage

For AC, the rated voltage of a fuse-link is related to the applied voltage; it is based on the RMS value of a sinusoidal AC voltage. It is further assumed that the applied voltage retains the same value throughout the operation of the fuse-link. All tests to verify the ratings are based on this assumption.

~~NOTE In many applications, the applied voltage will be sufficiently close to the sinusoidal form for the significant part of the operating time, but there are many cases where this condition is not satisfied.~~

~~The performance of a fuse-link subjected to a non-sinusoidal applied voltage can be evaluated by comparing, for the first approximation, the arithmetic mean values of the non-sinusoidal and sinusoidal applied voltages.~~ 7

For DC and VSI fuse-links, the rated voltage of a fuse-link is related to the applied voltage. It is based on the mean value. When DC is obtained by rectifying AC, the ripple is assumed not to cause a variation of more than 5 % above or 9 % below the mean value.

4.5.2 Applied voltage in service

Under service conditions, the applied voltage is that voltage which, in the fault circuit, causes the current to increase to such proportions that the fuse-link will operate.

Documents
Document Sharing Hub
Full document details: IEC 60269-4 2024 CMV

For AC, consequently, the value of the applied voltage in a single-phase AC circuit is usually identical to the power-frequency recovery voltage. For all cases other than the sinusoidal AC voltage, it is necessary to know the applied voltage as a function of time.

For a unidirectional voltage and for VSI fuse-links, the important values are:

– the average value over the entire period of the operation of the fuse-link;
– the instantaneous value near the end of the arcing period.

4.6 Current

The rated current of a semiconductor fuse-link is based on the RMS value of a sinusoidal AC current at rated frequency.

For DC, the RMS value of current is assumed not to exceed the RMS value based on a sinusoidal AC current at rated frequency.

NOTE The thermal response time of the fuse-element may be so short that it cannot be assumed that operation under conditions which deviate much from sinusoidal current can be estimated on the basis of the RMS current alone. This is so, in particular at lower frequency values and when the current presents salient peaks separated by appreciable intervals of insignificant current; for example, in the case of frequency converters and traction applications.

4.7 Frequency, power factor and time constant

4.7.1 Frequency

The rated frequency refers to the frequency of the sinusoidal current and voltage that form the basis of the type tests.

~~NOTE In particular, where service frequency deviates significantly from rated frequency the manufacturer should be consulted.~~

4.7.3 Time constant (τ)

For DC, the time constants expected in practice are considered to correspond to those in Table 105.

~~NOTE 1 Some service conditions may be found which exceed the specified performance shown in the table as regards time constant. In such a case, a design of fuse-link which has been tested and marked accordingly should be used or the suitability of such a fuse-link be subject to agreement between manufacturer and user. In some service conditions, the time constant is significantly lower than the values stated in the table. In such a case, the applied voltage can be higher than the rated voltage defined according to Table 105.~~ **8**

For VSI fuse-links, equivalent time constants expected in practice are considered to correspond to those in Table 106.

NOTE 2 The high rate of rise of short circuit current is due to the low inductance, which is considered to be equivalent to a low time constant.

NOTE 3 Instead of time constant di/dt can be used in case of short circuit condition.

di/dt = E/L.

E = voltage value of the DC power source,

L = total inductance of the capacitor discharge circuit.

~~**3.10 Temperature inside an enclosure**~~ **9**

~~Since the rated values of the fuse-links are based on specified conditions that do not always correspond to those prevailing at the point of installation, including the local air conditions, the user may have to consult the manufacturer concerning the possible need for re-rating.~~

AVA Documents Document Sharing Hub

Full document details: IEC 60269-4 2024 CMV

5 Classification

IEC 60269-1 applies.

6 Characteristics of fuses

IEC 60269-1 applies with the following supplementary requirements.

6.1 Summary of characteristics

6.1.3 Fuse-links

a) Rated voltage (see 6.2)
b) Rated current (see 6.3 of IEC 60269-1:2024)
c) Kind of current and frequency (see 6.4 of IEC 60269-1:2024)
d) Rated power dissipation (see 6.5 of IEC 60269-1:2024)
e) Time-current characteristics (see 6.6)
f) Breaking range (see 6.7.1 of IEC 60269-1:2024)
g) Rated breaking capacity (see 6.7.2 of IEC 60269-1:2024)
h) Cut-off current characteristics (see 6.8.2)
i) I^2t characteristics (see 6.8.3)
j) Dimensions or size (if applicable)
k) Arc voltage characteristics (see 6.9)
l) Fuse-links may only be used with the fuse-base and/or fuse-holder assigned by the manufacturer and defined in the manufacturer's instructions **10**

6.2 Rated voltage

For rated AC voltages up to 690 V and DC voltages up to 750 V, IEC 60269-1 applies; for higher voltages, the values shall be selected from the R 5 series or, where not possible, from the R 10 series of ISO 3.

A fuse-link shall have an AC voltage rating or a DC voltage rating or a VSI voltage rating. It may have one or more of these voltage ratings.

6.4 Rated frequency

The rated frequency is that frequency to which the performance data are related.

6.5 Rated power dissipation of the fuse-link and rated acceptable power dissipation of a fuse-holder **11**

In addition to the requirements of IEC 60269-1, the manufacturer shall indicate the power dissipation as a function of current for the range 50 % to 100 % of the rated current ~~or for 50 %, 63 %, 80 % and 100 % of the rated current~~. **12**

~~NOTE~~ In cases where the resistance of the fuse-link is of interest, this resistance should be determined from the functional relation between the power dissipation and the associated value of current.

Documents
Document Sharing Hub
Full document details: IEC 60269-4 2024 CMV

6.6 Limits of time-current characteristics

6.6.2 Time-current characteristics, time-current zones

6.6.2.1 General requirements

The time-current characteristics depend on the design of the fuse-link, and, for a given fuse-link, on the ambient air temperature and the cooling conditions.

The manufacturer shall provide time-current characteristics based on an ambient temperature of 20 °C to 25 °C in accordance with the conditions specified in 9.3. The time-current characteristics of interest are the pre-arcing characteristic and operating characteristics.

For AC, the time-current characteristics are stated at rated frequency and for pre-arcing or operating times longer than 0,1 s.

For DC, they are stated for time constants according to Table 105 and for pre-arcing or operating times longer than 15 τ.

For the higher values of prospective current (shorter times), the same information shall be presented in the form of I^2t characteristics (see 6.8.2).

6.6.2.2 Pre-arcing time-current characteristics

For AC, the pre-arcing time-current characteristic shall be based on a symmetrical AC current of a stated value of frequency (rated frequency).

For DC, the pre-arcing time-current characteristic is of particular significance for times exceeding 15 τ for the relevant circuit, and is identical to the AC pre-arcing time-current characteristic in this zone.

NOTE 1 Because of the wide range of circuit time constants likely to be experienced in service, the information for times shorter than 15 τ is conveniently expressed as a pre-arcing I^2t characteristic.

NOTE 2 The value of 15 τ has been chosen to avoid the effects which different rates of rise of current have on the pre-arcing time-current characteristic at shorter times.

6.6.2.3 Operating time-current characteristics

For AC with times longer than 0,1 s and for DC with times longer than 15 τ, the arcing period is negligible compared to the pre-arcing time. The operating time is then equivalent to the pre-arcing time.

6.6.3 Conventional times and currents

6.6.3.1 Conventional times and currents for "aR" fuse-links

See 8.4 and Table 101. 13

6.6.3.2 Conventional times and currents for "gR" and "gS" fuse-links

The conventional times and currents are given in Table 101.

Documents
Document Sharing Hub
Full document details: IEC 60269-4 2024 CMV

Table 101 – Conventional time and current for "gR" and "gS" fuse-links 14

Rated current A	Conventional time h	Conventional current			
		Type "gR"		Type "gS"	
		I_{nf}	I_f	I_{nf}	I_f
$I_n \leq 4$	1	1,1 I_n	2,1 I_n	1,5 I_n	2,1 I_n
$4 < I_n < 16$	1	1,1 I_n	1,9 I_n	1,5 I_n	1,9 I_n
~~$I_n \leq 63$ [a]~~ $16 \leq I_n \leq 63$	1	1,1 I_n	1,6 I_n	1,25 I_n	1,6 I_n
$63 < I_n \leq 160$	2				
$160 < I_n \leq 400$	3				
$400 < I_n$	4				
~~[a] In Annex CC, some examples specify the requirements for $I_n \leq 16$.~~					
~~NOTE For explanation of gR and gS see 5.7.1.~~ NOTE The conventional times also apply for "aR" – fuses					

6.6.4 Gates

Not applicable.

~~5.6.4 Overload curves~~ 15

~~5.6.4.1 Verified overload capability~~

~~The manufacturer shall indicate sets of coordinate points along the time-current characteristics (see 5.6.1) for which the overload capability has been verified in accordance with the procedure indicated in 8.4.3.4.~~

~~The number and the location of the sets of coordinate points for which the overload capability shall be verified shall be selected at the discretion of the manufacturer. The time coordinates for the verification of the overload capability shall be selected within the range of 0,01 s to 60 s. Further sets of the coordinate points may be added according to agreement between manufacturer and user.~~

~~5.6.4.2 Conventional overload curve~~

~~The conventional overload curve is formed of straight line sections emanating from the co-ordinate points of verified overload capability. From each set of coordinate points, two lines are drawn:~~

- ~~one from the verified point and following points of constant values of current towards shorter times;~~
- ~~the other from the verified point and following points of constant values of I^2t towards longer times.~~

~~These line sections, ending at the line representing rated current, form the conventional overload curve (see Figure 101).~~

~~NOTE For practical applications, a few points of verified overload capability are sufficient. As the number of points of verified overload capability increases, the conventional overload curve becomes more precise.~~

Documents
Document Sharing Hub
Full document details: IEC 60269-4 2024 CMV

6.7 Breaking range and breaking capacity

6.7.1 Breaking range and utilization ~~category~~ class

The first letter shall indicate the breaking range:

– "a" fuse-links (partial-range breaking capacity, see 8.4);

– "g" fuse-links (full-range breaking capacity).

The second letter "R" and "S" shall indicate the utilization ~~category~~ class for fuse-links complying with this standard for the protection of semiconductor devices.

The type "R" is typically faster acting than type "S" and gives lower I^2t values. **16**

The type "S" generally has lower power dissipation and gives enhanced utilization of cables compared to type "R".

For example:

– aR indicates fuse-links with partial range breaking capacity for the protection of semiconductor devices;

– gR indicates fuse-links with full-range breaking capacity for general application and semiconductor protection, optimised to low I^2t values;

– gS indicates fuse-links with full range breaking capacity for general application and semiconductor protection, optimised to low power dissipation.

Some aR fuse-links are used to protect voltage source inverters. Even though they are common aR fuses on AC, they must be tested differently under VSI DC short-circuit conditions. For these reasons, their designation is still "aR" but their DC characteristics must be clearly stated "for VSI protection" in the manufacturer's data sheets.

6.7.2 Rated breaking capacity

A breaking capacity of at least 50 kA for AC and ~~8~~ 20 kA for DC is ~~recommended~~ required. **17**

For AC, the rated breaking capacity is based on type tests performed in a circuit containing only linear impedance and with a constant sinusoidal applied voltage of rated frequency.

For DC, the rated breaking capacity is based on type tests performed in a circuit containing only linear inductance and resistance with mean applied voltage.

For VSI, the rated breaking capacity is based on type tests performed in a circuit ~~containing very low inductance and resistance with d.c. or capacitor discharged applied voltage~~ with low time constant. The time constant for tests is defined in Table 106. The required rated maximum breaking capacity of VSI fuses is at least 20 kA. **18**

NOTE The addition in practical applications of non-linear impedances and unidirectional voltage components may significantly influence the breaking severity either in a favourable or unfavourable direction.

6.8 Cut-off current and I^2t characteristics

6.8.2 Cut-off current characteristics

The manufacturer shall provide the cut-off current characteristics which shall be given, according to the example shown in Figure 4 of IEC 60269-1:2024, in a double logarithmic presentation with the prospective current as abscissa and, if necessary, with applied voltage and/or frequency as a parameter.

For AC, the cut-off current characteristics shall represent the highest values of current likely to be experienced in service. They shall refer to the conditions corresponding to the test conditions

AVA Documents
Document Sharing Hub
Full document details: IEC 60269-4 2024 CMV

of this standard, for example, given voltage, frequency and power-factor values. The cut-off current characteristics may be defined by the tests specified in 9.6.

For DC, the cut-off current characteristics shall represent the highest values of current likely to be experienced in service in circuits having a time constant specified in Table 105 for aR, gS and gR fuse-links, or in Table 106 for aR fuse-links in VSI applications. For aR, gS and gR fuse-links, these values will be exceeded in circuits of smaller time constants than those of Table 105. The manufacturer shall provide the relevant information to enable the determination of these higher cut-off current characteristics.

NOTE The cut-off current characteristic varies with the circuit time constant. The manufacturer should provide the relevant information to enable these variations to be determined at least for time constants of 5 ms and 10 ms.

6.8.3 I^2t characteristics

6.8.3.1 Pre-arcing I^2t characteristic

For AC, ~~the pre-arcing I^2t characteristic shall be~~ the manufacturer shall provide the pre-arcing I^2t characteristic based on a symmetrical AC current at a stated frequency value (rated frequency). **19**

For DC, the manufacturer shall provide the pre-arcing I^2t characteristic ~~shall be~~ based on RMS DC current at a time constant specified in Table 105 for aR, gS and gR fuse-links or in Table 106 for aR fuse-links in VSI applications.

~~NOTE For aR and gR and gS fuse-links, the pre-arcing I^2t characteristic varies with the circuit time constant. The manufacturer should provide the relevant information to enable these variations to be determined at least for time constants of 5 ms and 10 ms.~~

For DC, the prearcing I^2t value represents the lowest value likely to be experienced in service. It shall be based on RMS DC current as defined in the test requirements of test No.1 of the breaking capacity.

6.8.3.2 Operating I^2t characteristics

For AC, the manufacturer shall provide the operating I^2t characteristics ~~shall be~~ given with applied voltage as a parameter and for a stated power-factor value. In principle, they shall be based on the moment of current initiation that leads to the highest operating I^2t value (see 9.7). The voltage parameters shall include at least 100 %, and 50 % ~~and 25 %~~ of rated voltage.

For DC, the manufacturer shall provide the operating I^2t characteristics ~~shall be~~ given with the applied voltage as a parameter and for a time constant specified in the Table 105 for aR, gS and gR fuse-links, or Table 106 for aR fuse-links in VSI applications. The voltage parameters shall include at least 100 % and 50 % of rated voltage. It is permitted to determine the operating I^2t characteristics at lower voltages from tests in accordance with Table 105 or Table 106 according to their DC. application or VSI application.

The I^2t at reduced voltages may be calculated using the method described in IEC 60269-1:2024, Clause B.3. **20**

6.9 Arc voltage characteristics

Arc voltage characteristics provided by the manufacturer shall give the highest (peak) value of arc voltage as a function of the applied voltage of the circuit in which the fuse-link is inserted and, in the case of AC, for power factors as stated in Table 104 and, in the case of DC at time constants specified in Table 105 or in Table 106 according to their DC application or VSI application.

Documents
Document Sharing Hub
Full document details: IEC 60269-4 2024 CMV

7 Markings

IEC 60269-1 applies with the following supplementary requirements.

7.3 Marking of fuse-link

Subclause 7.3 of IEC 60269-1:2024 applies with the following addition:

– manufacturer's identification reference and/or symbols enabling all the characteristics listed in 6.1.3 of IEC 60269-1:2024 to be found;

– utilization ~~category~~ class, "aR" or "gR" or "gS";

– a combination of symbols of IEC 60417 of a fuse (5016) and a rectifier (5186) as shown below:

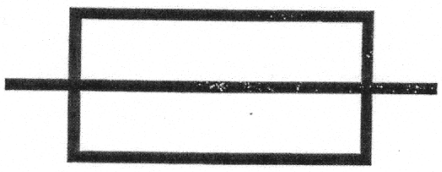

Symbol IEC 60417-5016 (2002-10)

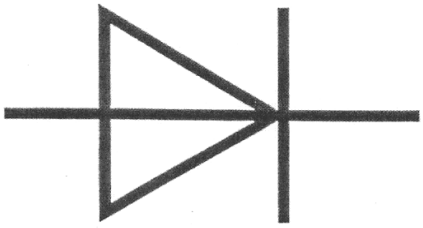

Symbol IEC 60417-5186 (2002-10)

For VSI rated fuse-links an additional mark, e.g. "1 200V DC VSI" with the voltage rating value must be stated on the product. **21**

8 Standard conditions for construction

IEC 60269-1 applies with the following supplementary requirements.

8.3 Temperature rise and power dissipation of the fuse-link and acceptable power dissipation of a fuse-holder **22**

Fuse-links shall be so designed and proportioned as to carry, when tested in accordance with 9.3, the rated current without exceeding,

– the temperature rise limit of the hottest upper metal part of the fuse-link indicated by the manufacturer instructions (see Figure 101 and Figure 102). **23**

– the power dissipation at the rated current indicated by the manufacturer instructions.

8.4 Operation

The fuse-link shall be so designed and proportioned as to carry continuously any value of current up to its rated current.

"aR" fuse-links shall operate and break the circuit for any current value not exceeding the rated breaking capacity and not less than ~~a current sufficient to interrupt the fuse-link specified by the manufacturer~~ the current I_{2a} (see Table 104 and Table 105). **24**

For "gR" and "gS" fuse-links within the conventional time and at currents defined in Table 101:

Documents
Document Sharing Hub
Full document details: IEC 60269-4 2024 CMV

– it ~~does~~ shall not operate, when it carries any current not exceeding the conventional non-fusing current (I_{nf});

– it ~~operates~~ shall operate when it carries any current equal to, or exceeding, the conventional fusing current (I_f) and equal to or lower than the rated breaking capacity.

8.5 Breaking capacity

A fuse-link shall be capable of breaking, at a voltage not exceeding ~~the voltage specified in 8.5~~ its rated voltage **25**, any circuit having a prospective current between a current according to 8.4 and the rated breaking capacity:

~~– for a.c. at power factors not lower than those in Table 104 appropriate to the value of the prospective current;~~

~~– for d.c., at time constants not greater than the values specified in Table 105;~~

~~– for VSI applications, the fuse-link shall be capable of breaking a current specified in 8.5 at time constants not greater than the value specified in Table 106.~~

– for AC, test parameters are given in Table 104;

– for DC, test parameters are given in Table 105;

– for VSI applications, test parameters are given in Table 106.

8.7 I^2t characteristics

The values of operating I^2t determined as described in 9.7 shall not exceed those stated by the manufacturer. The values of pre-arcing I^2t determined as described in 9.7 shall be not less than the values stated (see 6.8.2.1 and 6.8.2.2).

8.15 Arc voltage characteristics

The arc voltage values measured as described in 9.7.5 shall not exceed those stated by the manufacturer (see 6.9).

~~**7.16 Special operating conditions**~~

~~Special operating conditions, such as high value of acceleration, shall be subject to agreement between manufacturer and user.~~ **26**

9 Tests

IEC 60269-1 applies with the following supplementary requirements.

~~**8.1 General**~~

9.1.5 Arrangement of the fuse ~~link~~ and dimensions

The fuse-link shall be mounted open in free air in draught-free surroundings free from draughts and, unless otherwise specified, in a vertical position (see 9.3.1). Examples of test arrangements are given in Figure 101 and Figure 102. Test arrangements for other kinds of fuse-links are given in IEC 60269-2 and IEC 60269-3.

9.1.6 Testing of fuse-links

9.1.6.2 Complete tests

The complete tests on fuse-links are listed in Table 102. The internal resistance of all fuse-links shall be determined and recorded in the test report(s).

Documents
Document Sharing Hub
Full document details: IEC 60269-4 2024 CMV

A fuse-link shall have an AC breaking capacity or a DC breaking capacity or a VSI breaking capacity. It may have one or more of these breaking capacities.

Table 102 – List of complete tests 27

Test according to subclause		Number of fuse-links to be tested
9.3	Temperature rise and power dissipation	1
9.4.3.1 a)	Conventional non-fusing current	1
9.4.3.1 b)	Conventional fusing current	1
9.4.3.2	Verification of rated current	1
9.4.3.5	Conventional cable overload test (for "gR" and "gS" fuse-links only)	1
	For AC:	
9.5	No 5 "gR" and "gS" breaking capacity and operating characteristics	1
	No. 2a "aR" breaking capacity and operating characteristics	1
	No. 2 Breaking capacity and operating characteristics [a]	3
	No. 1 Breaking capacity and operating characteristics [a]	3
~~8.4.3.4~~	~~Verification of overload capability~~ ~~[b]~~	~~1~~
	For DC:	
9.5	No. 13 "gR" and "gS" breaking capacity and operating characteristics	1
	No.12a "aR" breaking capacity and operating characteristics	1
	No.12 Breaking capacity and operating characteristics	3
	No.11 Breaking capacity and operating characteristics	3
	For VSI fuse-links:	
9.5	No. 21 Breaking capacity and operating characteristics	3

[a] Valid for pre-arcing I^2t characteristics, if ambient air temperature is between 10 °C and 30 °C.

~~[b] The number of points at which the overload capability is verified should be at the manufacturer's discretion.~~

9.1.6.3 Testing of fuse-links of a homogeneous series

Fuse-links having intermediate values of rated current of a homogeneous series are exempted from type tests if the fuse-link of the largest rated current has been tested to the requirements of 9.1.6.2 and if the fuse-link of the smallest rated current has been submitted to the tests indicated in Table 103.

Table 103 – Survey of tests on fuse-links of the smallest rated current of a homogeneous series

Test according to subclause		Number of fuse-links to be tested
8.3	Temperature rise and power dissipation	1

9.3 Verification of temperature rise limits and power dissipation

9.3.1 Arrangement of the fuse~~-link~~

Only one fuse-link shall be used for the test. The fuse-link shall be mounted vertically in the conventional test arrangement. Examples are given in Figure 101 and Figure 102.

AVA Documents Document Sharing Hub

Full document details: IEC 60269-4 2024 CMV

The current density of the copper conductors forming part of the conventional test arrangement shall be not less than 1 A/mm^2 and not more than 1,6 A/mm^2, these values being based on the rated current of the fuse-link. The ratio of width to thickness of these conductors shall not exceed

– 10 for current ratings less than 200 A;
– 5 for current ratings 200 A and above.

The ambient air temperature during this test shall be between 10 °C and 30 °C.

When conducting the temperature-rise tests, the cross-sectional areas of the conductors connecting the conventional test arrangement to the supply are important. The cross-sectional area shall be selected in accordance with Table 18 of IEC 60269-1:2024, excluding the note, and the conductors on either side of the fuse-link shall be at least 1 m long.

For fuse-links intended to be used in separate fuse-bases, the test may be performed in these fuse-bases with conductors according to Table 18 of IEC 60269-1:2024; in other cases, the test shall be performed in the manner described in these requirements.

For special fuse-links or special applications that cannot be accommodated in the conventional test arrangement, or for which this test arrangement is not applicable, special tests shall be performed according to the manufacturer's instructions and all pertinent data shall be recorded in the test report.

9.3.3 Measurement of power dissipation of the fuse-link

In addition to 9.3.3 of IEC 60269-1:2024, the following applies: the power dissipation test shall be made successively at least at 50 % and at 100 % of rated current. This test may be performed with either AC or DC.

9.3.4 Test method

The cross-sectional area of copper conductors for high current ratings tests corresponding to Subclauses 9.3 and 9.4 is defined in Table 107.

Table 107 – Cross-sectional area of copper conductors for high current ratings tests

Rated current (I_N)	Cross-sectional area
A	(mm × mm)
1 600	2 × 100 × 5
2 000	3 × 100 × 5
2 500	4 × 100 × 5
3 150	3 × 100 × 10
≥ 4 000	I_N x mm^2 / A[a]
[a] For currents ≥ 4 000 A the cross-sectional area is defined with a current density = 1 A/mm^2.	

9.3.5 Acceptability of test results

The temperature rise and the power dissipation of the fuse-link shall ~~not exceed~~ be given in the ~~values specified by the manufacturer~~ manufacturer's documentation. **28**

Documents
Document Sharing Hub

Full document details: IEC 60269-4 2024 CMV

9.4 Verification of operation

9.4.1 Arrangement of the fuse~~-link~~

The arrangement of the fuse-link for the verification of operation shall be as described in 9.1.5 and 9.3.1.

9.4.3 Test method and acceptability of test results

The following tests may be performed by AC or DC source. **29**

9.4.3.1 Verification of conventional non-fusing and fusing current

"aR" fuse-links:

Not applicable.

"gR" and "gS" fuse-links:

~~It is permissible to make The following tests at a reduced voltage:~~

The following test must be made but can be performed with reduced voltage. **30**

a) the fuse-link is subjected to its conventional non-fusing current (I_{nf}) for a time equal to the conventional time specified in Table 101. It shall not operate during this time;
b) the fuse-link, after having cooled down to ambient temperature, is subjected to the conventional fusing current (I_f). It shall operate within the conventional time as specified in Table 101. The fuse-link shall operate without external effects or damage.

9.4.3.2 Verification of rated current ~~(see AA.3.3)~~

The fuse-link is tested under the same test conditions as indicated in 9.3.1.

It is subjected to 100 test cycles, each consisting of an "on" period of 0,1 times the conventional time as specified in Table 101 at rated current and an "off" period of the same duration. After test, the fuse-link must not have changed its resistance by more than 10 %. **31**

NOTE Conventional time for "gR" in Table 101 also applies for "aR". **32**

9.4.3.3.1 Time-current characteristics

The time-current characteristics may be verified on the basis of the results obtained from the oscillographic records taken during the performance of the tests according to 9.5.

The pre-arcing period is determined from the instant of closing the circuit until the instant when the voltage measurement shows the beginning of the arc.

The value of pre-arcing time so determined, referred to the abscissa corresponding to the value of the prospective current, shall be within the time-current zone indicated by the manufacturer.

For AC prospective currents heading to actual pre-arcing time values of less than 10 cycles of rated frequency and up to current values where the melting is adiabatic, the currents shall be initiated in such a manner that the prospective current will be symmetrical.

For DC, the time-current characteristics determined for AC are applicable for times longer than 15 τ for the relevant circuit.

Documents
Document Sharing Hub
Full document details: IEC 60269-4 2024 CMV

When, for the fuse-links of a homogeneous series (see 9.1.6.3), the complete test according to 9.5 is made only on the fuse-link having the largest rated current, it shall be sufficient to verify only the pre-arcing time for the fuse-link having the smallest rated current.

Pre-arcing time-current characteristics can be determined at any convenient voltage value and on any linear circuit. Tests to determine operating time-current characteristics require the proper voltage values and circuit characteristics.

~~**8.4.3.4 Overload**~~ **33**

~~The fuse-link is tested under the same test conditions as indicated in 8.3.1.~~

~~It is subjected to 100 load cycles, each cycle having a total duration of 0,2 times the conventional time, the "on" period with a current value and a duration corresponding to the co-ordinates of the overload capability to be verified, the "off" period forming the rest of the cycle. The conventional time is that specified in Table 101 .~~

~~NOTE These tests are deemed to verify the overload capability of the fuse on d.c. for pre-arcing times greater than 15τ for the relevant circuit.~~

9.4.3.5 Conventional cable overload protection test (for "gR" and "gS" fuse-links only)

"gR" and "gS" fuse-links: IEC 60269-1 applies.

9.4.3.6 Operation of indicating devices and striker, if any

The correct operation of indicating devices is verified in combination with the verification of breaking capacity (see 9.5.5).

For verifying the operation of strikers, if any, an additional test sample shall be tested:

– at a current of I_{2a} (see Table 104 and Table 105);

– at a recovery voltage of 20 V.

The value of the recovery voltage may be exceeded by 10 %.

The striker shall operate during all tests.

However, if, during one of these tests, the indicating device or striker fails, the test shall not be considered negative on this account, if the manufacturer can furnish evidence that such failure is not typical of the fuse type but is due to a fault on the individual tested sample. If such a failure occurs, then twice the number of samples shall be tested for the particular test duty, without further failure.

The characteristics and the verification of the characteristics of indicating devices or strikers are subject to an agreement between the manufacturer and user.

9.5 Verification of the breaking capacity

9.5.1 Arrangement of the fuse

In addition to the conditions of 9.1.4 and 9.3.1, the following applies.

For breaking-capacity tests, the fuse-link shall be mounted in a manner resembling its practical use, in particular with respect to the location of the conductors. In cases where the fuse-link can be used rigidly supported at one end only, it shall be so mounted for the test. Fuse-links intended to be always rigidly supported at both ends shall be so tested.

AVA Documents Document Sharing Hub

Full document details: IEC 60269-4 2024 CMV

9.5.5 Test method

9.5.5.1 In order to verify that the fuse-link satisfies the conditions of 8.5 for AC, test Nos. 1 to 2a for "aR" fuse-links and tests numbers 1, 2 and 5 for "gR" and "gS" fuse-links, as described below, shall be made, ~~unless otherwise specified,~~ with the values stated in Table 104 (see 9.5.5.2) for each of these tests. For DC tests, numbers 11 to 12a for ~~"~~"aR fuse-links and numbers 11, 12 and 13 for "gR" and "gS" fuse-links shall be made, unless otherwise specified, with the values stated in Table 105. For VSI fuse-links, test no 21 shall be made with the values stated in Table 106. Test voltages are given in Tables 104,105 and 106.

Test Nos. 1 and 2 for AC; or 11 and 12 for DC or 21 for VSI fuse-links: for each of these tests, three fuse-links shall be tested in succession. If, during test No. 1, the requirements of test No. 2 are met on one or more tests, then these tests need not be repeated as part of test No. 2. The same applies for tests numbers 11 and 12 for DC.

Test Nos. 2a and 5 for AC and 12a and 13 for DC: for AC, the values of test current are specified in Table 104. For DC, the values of test current are specified in Table 105. For AC tests, the closing of the circuit in relation to the passage of the applied voltage through zero may be effected at any instant. If the testing arrangement does not permit the current to be maintained at the full voltage during all of the time required, the fuse may be pre-heated at reduced voltage by applying a current approximately equal to the value of the test current. In this case, switching over to the test circuit according to 9.5.2 shall take place before the arc is initiated, and the switching time T_1 (interval without current) shall not exceed 0,2 s. The time interval between re-application of the current and beginning of arcing shall be not less than three times T_1.

The following text replaces the text of 9.5.5.2 of IEC 60269-1:2024 with the exception of the resistance test: **34**

9.5.5.2 For one of the tests of No. 2 and for test No. 2a or 5 for AC, and one of the tests of No. 12 and for tests 12a or 13 for DC, and for one test of 21 for VSI, the recovery voltage shall be maintained at a value of:

– for AC, ~~110~~ 105% + 5 %/-0 % % of the rated voltage
– for DC, ~~100~~ 105% + 10 %/-0 % of the rated voltage
– for VSI, ~~100~~ 105% + 10 %/-0 % of the rated voltage

The tolerance +xx %/-xx % is to be used by testing bodies as tolerance in testing. The practical use of the fuse should be only to 100 % of the rated voltage, unless the manufacturer gives his consent to a higher value. **35**

For at least:

– 30 s after operation of fuse-links not containing organic materials in their body or filler;
– 5 min after operation of the fuse-links in all other cases, switching over to another source of supply being permitted after 15 s if the switching time (interval without voltage) does not exceed 0,1 s.

For all other tests, the recovery voltage shall be maintained at the same value for 15 s after operation of the fuse.

In a lapse of time of at least 6 min and maximum 10 min after the operation, the resistance between the contacts of the fuse-link shall be measured (see 9.5.8) and noted. With the manufacturer's consent, shorter times are possible if the fuse-link does not contain organic materials in its body or filler.

Documents
Document Sharing Hub
Full document details: IEC 60269-4 2024 CMV

Table 104 – Values for breaking-capacity tests on AC fuses 36

	Tests according to 9.5.5.1			
	No. 1	No. 2	No. 2a	No. 5
Power-frequency recovery voltage[c]	~~110^{+2}_{-3} % of the rated voltage[a]~~ ~~110^{+5}_{0} % for other rated voltages[a]~~ 105+5%/-0% of the rated voltage [a]			
Prospective test current	I_1	I_2	I_{2a} "aR"	I_5 = 1,25 I_f "gR" and "gS"
Tolerance on current	$^{+10}_{0}$ % [a]	Not applicable		$^{+20}_{0}$ %
Power factor	0,2 to 0,3 for prospective current up to and including 20 kA 0,1 to 0,2 for prospective current above 20 kA		0,3 to 0,5 [b]	
Making angle after voltage zero	Not applicable	$0\ ^{+20}_{-0}$	Not specified	
Initiation of arcing after voltage zero	65° to 90°	Not applicable		

I_1 is the current which is used in the designation of the rated breaking capacity (see 6.7.2).

I_2 is the current which shall be chosen in such a manner that the test is made under conditions which approximate those giving maximum arc energy.

NOTE This condition may be deemed to be satisfied if the current at the beginning of arcing (instantaneous value) has reached a value between $0{,}6\sqrt{2}$ (=0,85) and $0{,}75\sqrt{2}$ (=1,06) times the prospective current (for AC, the RMS value of the AC component).

~~As a guide for practical application,~~ Informative: The value of current I_2 may be found between three and four times the current which corresponds to a pre-arcing time of one half-cycle of rated frequency on the time-current characteristic.

I_{2a} is the minimum value of the breaking capacity of the fuse-link in the overcurrent range specified by the manufacturer (see 8.4).

I_5 is the test current deemed to verify that the fuse is able to operate satisfactorily in the range of small overcurrents.

[a] The positive tolerance may be exceeded with the manufacturer's consent.

[b] Power factors lower than 0,3 may be permitted with the manufacturer's consent.

[c] For single-phase circuits, the RMS value of the applied voltage is for all practical purposes equal to the RMS value of the power-frequency recovery voltage.

Documents
Document Sharing Hub
Full document details: IEC 60269-4 2024 CMV

Table 105 – Values for breaking-capacity tests on DC fuses 37

	Tests according to 9.5.5.1			
	No. 11	No. 12	No. 12a	No. 13
Mean value of recovery voltage[a]	~~115~~ 105 %+10 %-0 % of the rated voltage [b]			
Prospective test current	I_1	I_2	I_{2a} "aR"	I_5 = 1,25 I_f "gR" and "gS"
Tolerance on current	$^{+10}_{0}$ %	Not applicable		$^{+20}_{0}$ %
Time constant[c]	Where prospective test current is greater than 20 kA: 10 ms to 15 ms Where prospective test current I is equal to, or less than, 20 kA: 0,5 $(I)^{0,3}$ ms with a tolerance of $^{+20}_{0}$ % [b] (value of I in A)			

I_1 is the current which is used in the designation of the rated breaking capacity (see 6.7.2).

I_2 is the current which shall be chosen in such a manner that the test is made under conditions which approximate those giving maximum arc energy.

NOTE This condition may be deemed to be satisfied if the current, at the beginning of arcing, has reached a value between 0,5 and 0,8 times the prospective current.

I_{2a} is the minimum value of the breaking capacity of the fuse-link in the overcurrent range specified by the manufacturer (see 8.4).

I_5 is the test current deemed to verify that the fuse is able to operate satisfactorily in the range of small overcurrents.

[a] This tolerance includes ripple.

[b] The upper limit may be exceeded with the manufacturer's consent.

[c] In some practical applications, time-constant values may be found which are shorter than those indicated in the tests and which may result in a more favourable fuse performance. Time constants which are considerably longer than those indicated will in most cases significantly affect the performance, in particular with respect to the rated voltage. For such applications, further information may be available from the manufacturer.

Table 106 – Values for breaking-capacity tests on VSI fuse-links 38

	Tests according to 9.5.5.1
	No. 21
Mean value of recovery voltage [a]	~~110~~ ~~$^{+2}_{-3}$~~ ~~%~~ 105 +10%/-0% of the rated voltage [b]
Prospective test current	I_1
Tolerance on current	$^{+10}_{-0}$ %
Time constant	Less than 3 ms [c]

I_1 is the current which is used in the designation of the rated breaking capacity (see 6.7.2).

[a] This tolerance includes ripple.

[b] The upper limit may be exceeded with the manufacturer's consent.

[c] ~~Prospective current with high di/dt instead of low time constant may be utilized with the manufacturer's consent.~~ The time constant can be higher with the manufacturers' consent.

9.5.8 Acceptability of test results 39

~~Fuse-links shall be deemed not to comply with this standard if, during the tests, one or more of the following failures occur:~~

~~– ignition of the fuse-link, excluding any paper labels or the like used as indicating devices;~~

AVA Documents Document Sharing Hub

~~– mechanical damage to the conventional test arrangement;~~

~~– mechanical damage to the fuse-link;~~

~~NOTE Thermal cracking which leaves the fuse-link in one piece is accepted.~~

~~– burning or melting of end caps;~~

~~– significant movement of end caps.~~

Part 1 of IEC 60269 applies.

9.6 Verification of the cut-off current characteristics

9.6.1 Test method

For AC, tests shall be made as specified in Table 104.

For DC, tests shall be made as specified in Table 105.

For VSI fuse-links, tests shall be made as specified in Table 106.

Tests conducted in accordance with 9.5 shall be used for evaluation according to 9.6.2. The tests may be used to prove the characteristics of all fuse-links of a homogeneous series.

9.6.2 Acceptability of test results

For AC, cut-off characteristics shall be verified from tests Nos. 1 and 2 in Table 104.

For DC, cut-off current characteristics shall be verified from tests Nos. 11 and 12 in Table 105.

For VSI fuse-links, cut-off characteristics shall be verified from test No. 21 in Table 106.

9.7 Verification of the I^2t characteristics and overcurrent ~~discrimination~~ selectivity

9.7.1 Test method

The test method is that specified in 9.6.1.

9.7.2 Acceptability of test results

For AC, the I^2t characteristics shall be verified from tests Nos. 1 and 2 according to Table 104.

For DC, the I^2t characteristics shall be verified from tests Nos. 11 and 12 according to Table 105.

For VSI fuse-links, the I^2t characteristics shall be verified from tests No. 21 according to Table 106.

The values of the pre-arcing I^2t at each prospective current shall be not less than the values stated by the manufacturer.

The values of operating I^2t at each prospective current shall not exceed the values indicated by the manufacturer for the stated applied voltage.

9.7.3 Verification of compliance for fuse-links at 0,01 s

Not applicable.

Documents
Document Sharing Hub
Full document details: IEC 60269-4 2024 CMV

9.7.4 Verification of overcurrent ~~discrimination~~ selectivity 40

Not applicable.

9.7.5 Verification of arc voltage characteristics and acceptability of test results

The highest values of arc voltage derived from each of the following tests shall not exceed those indicated by the manufacturer.

For AC, the arc voltage characteristics shall be verified from tests Nos. 1 and 2 in Table 104.

For DC, the arc voltage characteristics shall be verified from tests Nos. 11 and 12 in Table 105.

For VSI fuse-links, the arc voltage characteristics shall be verified from tests No. 21 in Table 106.

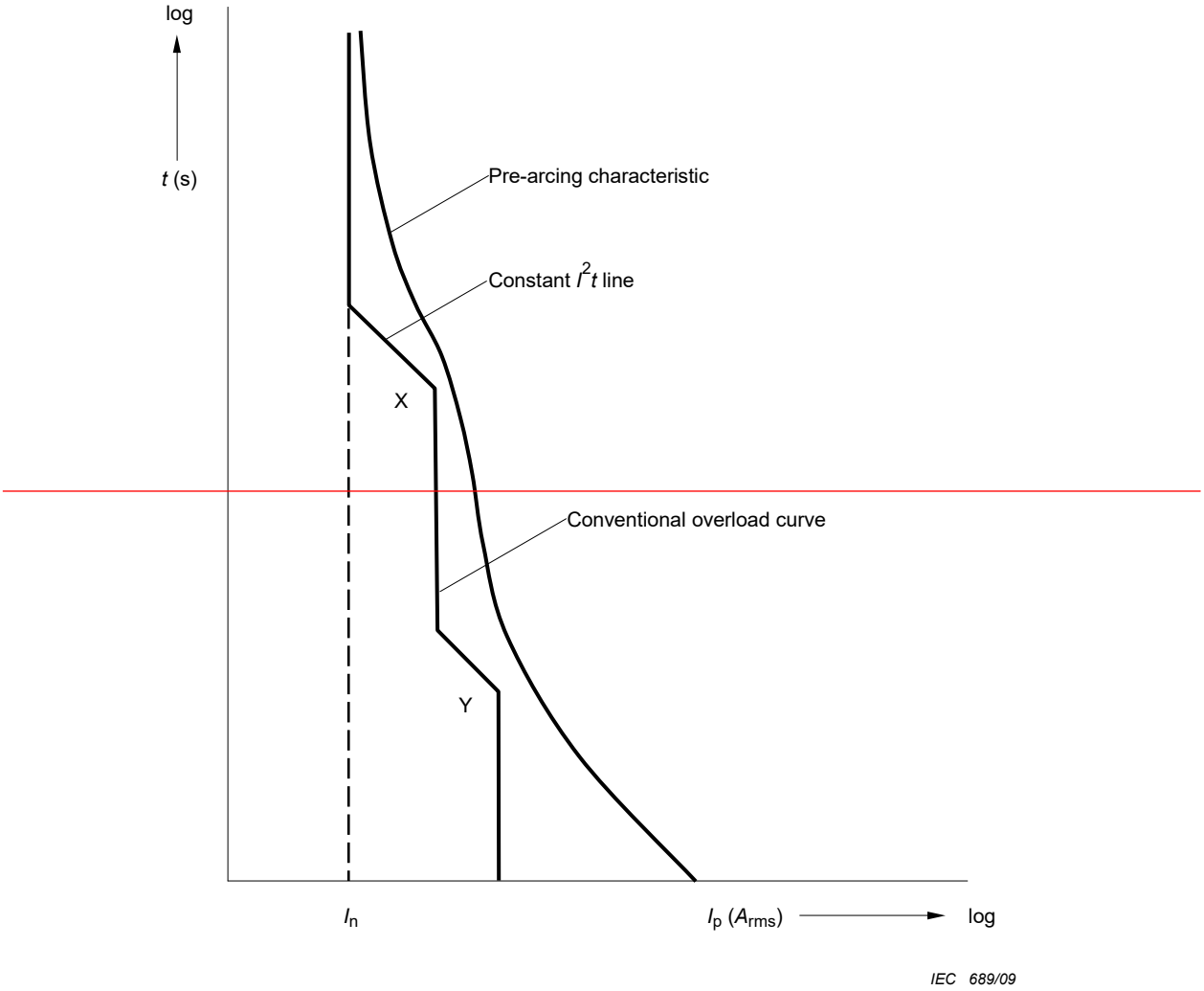

~~Figure 101 – Conventional overload curve (example)~~
~~(X and Y are points of verified overload capability)~~

Documents
Document Sharing Hub
Full document details: IEC 60269-4 2024 CMV

Dimensions in millimetres

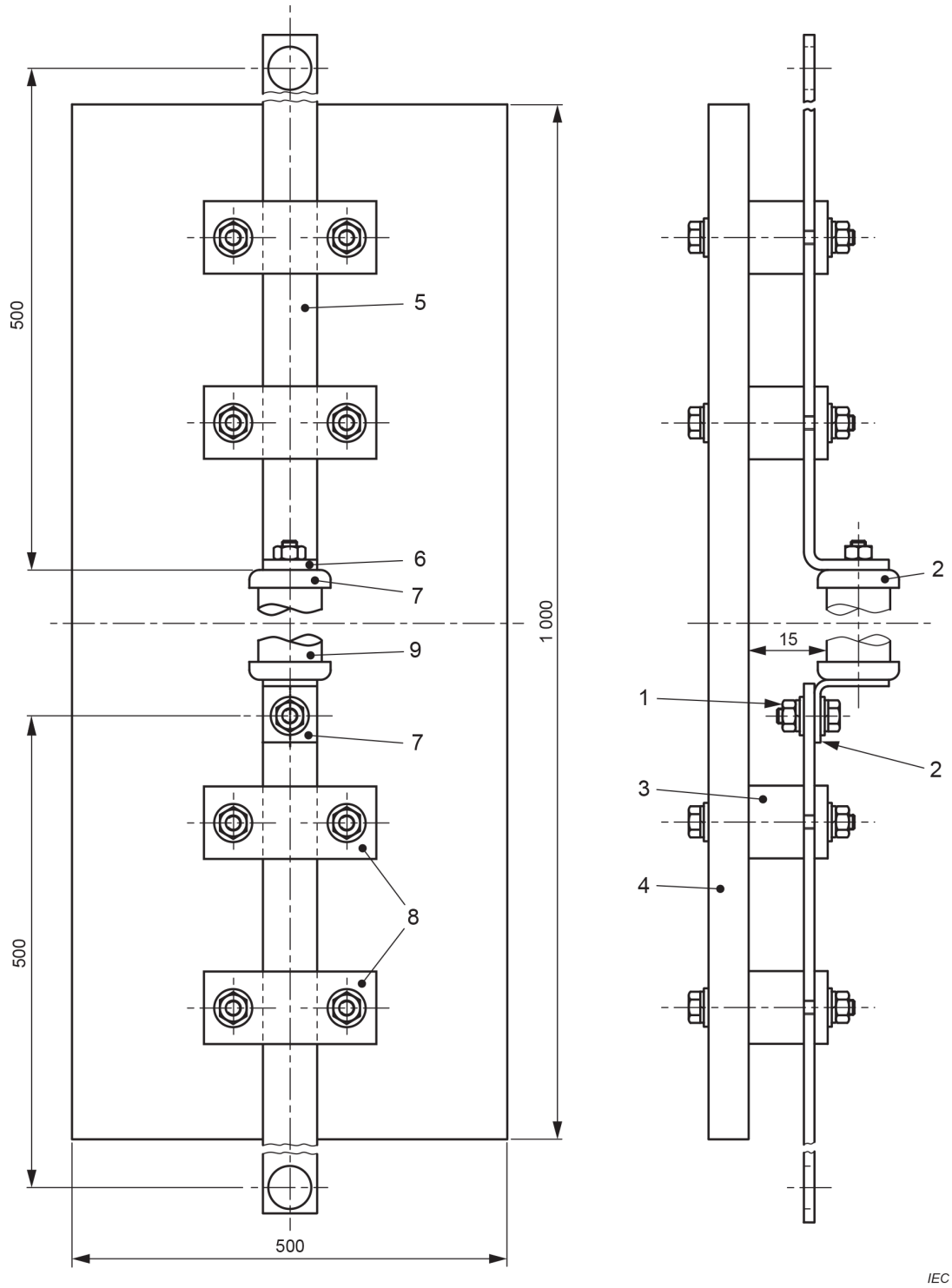

Key

1 fixing bolts
2 alternative points of measurement of voltage for determination of power dissipation
3 insulating blocks (for example, wood)
4 insulated base panel (for example, 16 mm plywood)
5 matt black finish
6 position of thermocouple fixed to hottest upper metal part of the fuse-link, indicated by the manufacturer or otherwise specified
7 contact surface to be tin-plated
8 insulated clamps. Where necessary, the two upper clamps may be left loose.
9 the body of the fuse-link can be round or rectangular

Figure 101 – Example of a conventional test arrangement for bolted fuse-links

AVA Documents
Document Sharing Hub
Full document details: IEC 60269-4 2024 CMV

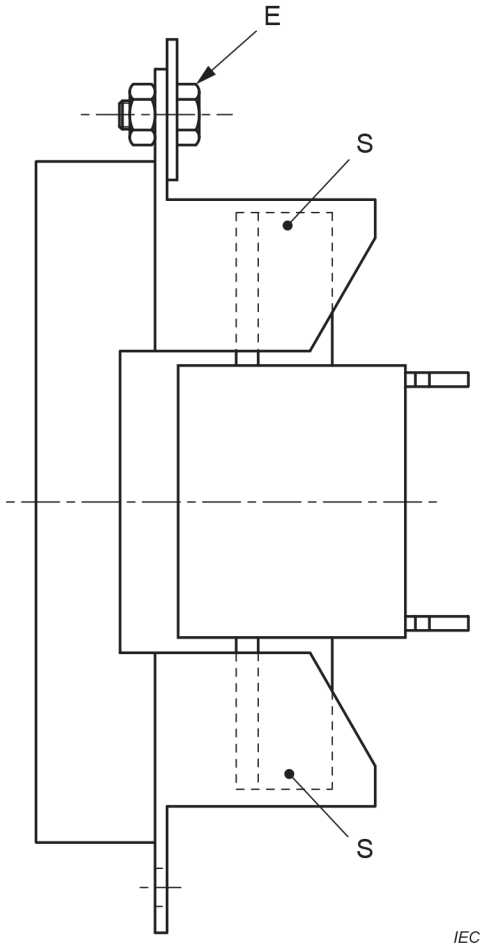

Key

Points of measurement:

E temperature rise

S power dissipation

Figure 102 – Example of a conventional test arrangement for blade contact fuse-links

Documents
Document Sharing Hub
Full document details: IEC 60269-4 2024 CMV

Annex AA
(informative)

Guidance for the coordination of fuse-links with semiconductor devices 41

NOTE The full content of this annex can be read in the user guide IEC TR 60269-5:2014+AMD1:2020 and therefore is not copied here.

~~AA.1 General~~

~~This annex is limited to the use of fuse-links in circuits having the characteristics generally found in converters based on semiconductors.~~

~~It deals with the performance of fuse-links under the conditions covered but it does not deal with the adequacy of fuse-links with respect to converters.~~

~~NOTE Attention is drawn to the fact that fuse-links intended for use on a.c. are not necessarily suitable for use on d.c. The manufacturer should be consulted on all cases of d.c. applications. It should be noted in particular that the relationship between rated voltage a.c. versus rated voltage d.c. cannot be stated in a general form. The few references in this guide to d.c. operations are not complete and do not cover all of the important factors related to such use.~~

~~It is the object of this annex to explain the performance to be expected from the fuse-links in terms of their ratings and in terms of the characteristics of the circuits of which they form a part, in such a manner that this may form the basis for the selection of the fuse-links.~~

~~AA.2 Terms and definitions~~

~~For the purposes of this annex, the following terms and definitions apply. See also the terms and definitions of Clause 2.~~

~~**AA.2.1**~~
~~**pulsed current** (in a semiconductor fuse-link)~~
~~unidirectional current, the instantaneous value of which varies in a cyclic manner and includes intervals of zero or insignificantly small values of current for times significant in relation to the total cycle~~

~~NOTE A typical pulsed current is the current in a single arm of a bridge connected rectifier.~~

~~**AA.2.2**~~
~~**pulsed load** (in a semiconductor fuse-link)~~
~~load where the r.m.s. value of the current varies in a cyclic manner and includes intervals of zero current or insignificantly small values of current for times significant in relation to the total load cycle~~

~~NOTE In a rectifier circuit, a pulsed load may be caused by cyclic making and breaking of the d.c. circuit current; for instance, by the starting and stopping of a motor.~~

~~AA.3 Current-carrying capabilities~~

~~AA.3.1 Rated current~~

~~The rated current of a semiconductor fuse-link is assigned by the manufacturer and verified in particular by the temperature-rise test (see 8.3) and by the repetitive duty test as described in 8.4.3.2.~~

Documents
Document Sharing Hub
Full document details: IEC 60269-4 2024 CMV

~~NOTE The ability to carry current without deterioration is closely related to the temperature variations. The data given by the manufacturer relate to the test conditions (see 8.1.4 and 8.3). The cooling conditions depend on the physical properties of the fuse-link, the flow of the cooling medium, the type and temperature of the connections and of adjacent hot bodies.~~

~~Guidance on the influence of these factors may be obtained from the manufacturer.~~

~~AA.3.2 Continuous duty current~~

~~For most kinds of fuse-links for semiconductor devices, the continuous duty current is identical with the rated current (see AA.3.1). However, fuse-links designed for applications not requiring the carrying of rated current continuously are to be de-rated for continuous duty.~~

~~AA.3.3 Repetitive duty current~~

~~The tests for rated current verify that the fuse-link is able to withstand, under the test conditions, repetition of the rated current load at least 100 times. The expected life in the number of repetitions will increase as the value of the actual load current is reduced in relation to the rated current.~~

~~The manufacturer's advice should be sought on the suitability of a given fuse-link for a required repetitive duty, since the specified tests establish minimum life-expectancy requirements only.~~

~~AA.3.4 Overload current~~

~~The overload capability (see 5.6.4.1) indicated by the manufacturer is based on one or more coordinates of time and current for which the overload capability has been verified under conditions identical with those indicated for the rated current (see 8.4.3.4). The conventional overload characteristic based on these verified points is a conservative estimate of the overload capability (see 5.6.4.2 and Figure 101).~~

~~As the actual overload rarely shows the same function of time as the conventional overload, it shall be transformed into an equivalent conventional one as follows:~~

- ~~the maximum value of the actual overload is equated to the maximum value of an equivalent conventional overload;~~
- ~~the duration of the equivalent conventional overload shall be such that its I^2t becomes equal to the I^2t of the actual load integrated over a time of 0,2 times the conventional time of the fuse-link.~~

~~Any value of the load which approaches 0,2 times the conventional time shall be considered to be a continuous load with respect to the fuse-link.~~

~~However, as the verification of the overload capability is based on 100 overload cycles, the practical cases of repetitive overload may necessitate a de-rating. The manufacturer's advice should be sought.~~

~~AA.3.5 Peak current (cut-off current)~~

~~The highest value of peak current is obtained when the fuse-link operates under adiabatic conditions.~~

~~Under conditions where the rate-of-rise of the current is essentially constant, the instantaneous value of the current reached at the end of the pre-arcing period increases as the cube root of the rate-of-rise. For many fuse-links, this is essentially the peak value. For fuse-links reaching the peak value of current significantly later (in the arcing period), no general statement can be made and information should be obtained from the manufacturer.~~

Documents
Document Sharing Hub
Full document details: IEC 60269-4 2024 CMV

~~AA.4 Voltage characteristics~~

~~AA.4.1 Rated voltage~~

~~The rated voltage (see 5.2) of the fuse-link for the protection of semiconductor devices is a value of sinusoidal applied voltage of rated frequency (or, in some cases, d.c.) assigned by the manufacturer. Information on the fuse-link is related to the rated voltage. Comparison between fuse-links of different manufacture on the basis of the voltage rating alone is insufficient.~~

~~AA.4.2 Applied voltage in service~~

~~The applied voltage is the voltage in the fault circuit that causes the fault current to flow. In most cases, it is possible to consider the no-load voltage in the fault circuit as the applied voltage, since the influence of the voltage drop can usually be disregarded.~~

~~NOTE The applied voltage may be affected by any commutation which takes place during the operation of the fuse-link or by the arc voltage of another fuse-link.~~

~~During the pre-arcing period, the applied voltage and the self-inductance of the circuit determine the rate of rise of the fault current (in general, it increases from zero to almost its peak value). In a given circuit, i.e. for a given self-inductance, it is the value of I^2t that determines the end of the pre-arcing period, and it is the integral of the applied voltage during that period that determines the instantaneous value of the current reached by the end of the pre-arcing period.~~

~~During the arcing period, the difference between the arc voltage and the applied voltage determines the rate of change of the current. Generally, it is a decrease from the peak value to zero. The zero value is reached in that instant where the integral of this difference becomes equal to the integral of the applied voltage over the pre-arcing period. For the time in which the arc voltage is less than the applied voltage, the current continues to increase; but, in most cases, this time is short and the associated current increase negligible.~~

~~For a fuse-link operating in the adiabatic or near adiabatic zone, the pre-arcing I^2t is a well-defined quantity. The arcing I^2t can assume very different values, even for the same arcing time. It becomes a minimum when the excess arc voltage reaches its maximum during the early part of the arcing period.~~

~~AA.4.3 Arc voltage~~

~~The peak value of the arc voltage indicated by the manufacturer is that obtained under the most unfavourable conditions. The arc-voltage characteristic is given as a function of the applied voltage. The peak value of the arc voltage should be limited to that which can be withstood by the semiconductor device.~~

~~AA.5 Power dissipation characteristics~~

~~AA.5.1 Rated power dissipation~~

~~The rated power dissipation is based on the rated current and on the standard test conditions (see 8.1.4 and 8.3.1). The temperature coefficient of the resistance of the fuse-link causes an increase in power dissipation at a higher rate than the square of the current.~~

~~For this reason, the manufacturer provides information about the relation between current and power dissipation either in the form of a power dissipation characteristic or in the form of discrete points.~~

~~The power dissipation characteristic may deviate from the rated value because of installation conditions different from those of the test (see 8.3).~~

Documents
Document Sharing Hub
Full document details: IEC 60269-4 2024 CMV

~~AA.5.2 Factors influencing power dissipation~~

~~Because of the significant influence on power dissipation of the relation between the actual current and the rated current, it may be desirable to use fuse-links of larger current ratings than those determined by repetitive duty and overload. However, the higher current ratings imply a larger value of I^2t. The use of a fuse-link of the highest current rating consistent with reasonable protection may at the same time reduce power dissipation and solve the problems of repetitive duty and overload.~~

~~The use of a fuse-link of a higher voltage rating inherently leads to higher values of power dissipation. If its use is possible in spite of higher values of arc voltage, a reduction in the arcing I^2t will be obtained which may permit the selection of a fuse-link having a higher current rating, resulting in a reduction in power dissipation.~~

~~Fuse-links having iron parts may show a significant increase in power dissipation when used at frequencies higher than rated frequency.~~

~~AA.5.3 Mutual influence~~

~~A very short electrical connection between the fuse-link and the associated semiconductor device provides a significant thermal coupling between the two.~~

~~Thus, any reduction in the power dissipation of the fuse-link may improve the current loading of the semiconductor device.~~

~~AA.6 Time-current characteristics~~

~~AA.6.1 Pre-arcing characteristic~~

~~A pulsed current, as it appears in the arms of rectifiers or invertors, cannot be dealt with solely on the basis of its r.m.s. value. In marginal cases, it is necessary to make sure that a single pulse alone cannot damage the fuse-element. For instance, if a short-time overload (for example, below 0,1 s) is considered in accordance with 8.4.3.4, the peak of the actual overload is not the maximum value of the r.m.s. value, but the peak of the highest pulse.~~

~~Any current of frequency higher than rated frequency has practically no influence on the pre-arcing I^2t characteristic, except in the region mentioned above. For values of prospective current where the pre-arcing time at rated frequency is less than one quarter-cycle, the tendency at higher frequencies is towards shorter pre-arcing times. For frequencies lower than rated frequency, the effect is the opposite of that mentioned above. However, attention is drawn to the fact that the increase in pre-arcing time can be even more significant, particularly towards the higher values of prospective current.~~

~~For lower values of prospective current, the only influence of an asymmetrical current (a.c. with a transient d.c. component) is to give a slight increase in the r.m.s. value of the current.~~

~~In the adiabatic zone, the influence is best considered as an increase or decrease in the rate of rise, replacing the actual current by that symmetrical current that has the same (or similar) rate of rise during the pre-arcing period.~~

~~In the critical zone, where the pre-arcing I^2t characteristic leaves the adiabatic zone, a distinction has to be made between an asymmetry beginning with a major loop and one beginning with a minor loop. The major loop will give a decrease in the pre-arcing I^2t value, the minor loop will give an increase.~~

~~When considering the ability of the fuse-link to withstand an asymmetrical current, the peak of the asymmetry shall be taken into account.~~

AVA Documents
Document Sharing Hub

Full document details: IEC 60269-4 2024 CMV

~~In case of operation with d.c., the pre-arcing I^2t characteristic based on a.c. may not be applicable at all, or be only partly applicable, depending on the circuit parameters.~~

~~If the time constant of the circuit is smaller than the shortest time being considered, the prospective current is the applied voltage divided by the resistance.~~

~~If the circuit contains a significant amount of self-inductance, the adiabatic zone of the pre-arcing I^2t characteristic can be used provided the abscissa refers to rate of rise instead of prospective current, i.e. the rate-of-rise of d.c. is determined as the applied voltage divided by the self-inductance. It is further to be assumed that the value of the prospective current (the applied voltage divided by the resistance) is significantly higher (three times or more) than the cut-off current at the rate of rise considered.~~

~~For the remaining cases of d.c. operation, it is very difficult to draw any significant conclusions about the pre-arcing time to be expected from the normal pre-arcing I^2t characteristic based on a.c., and the manufacturer should be consulted. However, the majority of practical cases are covered by the consideration of the rate-of-rise equivalence.~~

~~The normal pre-arcing I^2t characteristic does not give much information on the behaviour in the case of a non-sinusoidal current unless it is either a case where the rate of rise is predominant (i.e. for very large currents) or where the current is of such low value that the long time involved permits the use of the r.m.s. value.~~

~~AA.6.2 Operating I^2t characteristic~~

~~For a given prospective current, the difference between the pre-arcing I^2t characteristic and the operating I^2t characteristic is the maximum value of the arcing I^2t which is possible under the conditions for which the operating I^2t is drawn. The data presented by the manufacturer are based on a low value of power factor (i.e. below 0,3) and the r.m.s. value of the applied voltage.~~

~~The worst case is reached when the instantaneous value of applied voltage is as large as possible both throughout the pre-arcing period and the arcing period. Since such a situation seldom occurs, advantage may be taken of this fact.~~

~~For the same applied voltage and the same prospective short-circuit current, a higher frequency implies a lower value of self-inductance, so the arcing time decreases and within practical limits it is inversely proportional to the frequency.~~

~~For the same applied voltage and the same prospective short-circuit current, a lower frequency implies a higher value of self-inductance, so the arcing time increases and within practical limits it is inversely proportional to the frequency.~~

~~NOTE Because of the longer arcing time and the resulting energy released, it is not certain that fuse-links are suitable for use at a frequency below rated frequency. The manufacturer should be consulted whenever operating frequency below rated frequency is contemplated.~~

~~The influence of asymmetrical current shall be taken into account in the selection of the maximum value of the arcing time.~~

~~In all cases of d.c. (see Note in AA.1) where the pre-arcing I^2t is judged on the basis of the rate of rise (see AA.6.1), and if the cut-off current is reached at the end of the pre-arcing period, the operating I^2t is also valid provided that the voltage parameter (which is based on r.m.s. values) is so chosen that the applied d.c. voltage is less than the average a.c. voltage (90 % of the r.m.s. value). All other cases require special consideration or additional information should be obtained from the manufacturer.~~

Documents
Document Sharing Hub
Full document details: IEC 60269-4 2024 CMV

~~AA.7 Breaking capacity~~

~~Within the rating, breaking capacity for non-sinusoidal a.c. is rarely critical for fuse-links for the protection of semiconductor devices.~~

~~For the higher values of voltage (high-voltage fuse-links), the task of breaking small values of current may be a problem, but this problem normally lies outside the range of currents which is of interest here (see 7.4).~~

~~The breaking capacity is not impaired by frequencies higher than rated frequency as long as the maximum value of rate of rise of the current for rated frequency is not exceeded. At frequencies lower than rated frequency, the energy released in the fuse-link is larger than at rated frequency. Additional information should be obtained from the manufacturer, which may include a test at the lower frequency according to 8.5.5.1.~~

~~For breaking capacity on d.c. (see Note in AA.1), the energy released in the fuse-link is in many cases greater than at rated frequency. Often, satisfactory operation can be ensured only by using a fuse-link having an a.c. rated voltage appreciably higher than the d.c. supply voltage. Additional information should be obtained from the manufacturer.~~

~~AA.8 Commutation~~

~~Short-circuit currents in semiconductor installations normally involve circuits having several arms between which commutation can take place during the operation of the fuse-link. Such commutation can be caused by the cyclic change in the voltage of the a.c. source, by the firing of thyristors or by the arc voltage of another fuse-link.~~

~~The commutations influence the operation of the fuse-link by altering the circuit configuration, the circuit constants and by changing the applied voltage (for example, by adding an arc voltage).~~

~~Another form of unintentional commutation which may seriously affect the duty of the fuse-link is that caused by the appearance of a secondary fault.~~

Documents
Document Sharing Hub
Full document details: IEC 60269-4 2024 CMV

Annex BB
(normative)

Survey on information to be supplied by the manufacturer in his literature (catalogue) or on request 42 for a fuse designed for the protection of semiconductor devices

The following information ~~shall~~ should be given separately for AC and, where applicable, for DC.

a) Name of the manufacturer (trade mark)

b) Type or list reference of the manufacturer

c) Rated voltage (see 4.4.1)

d) Rated current (see 4.5)

e) Rated frequency or frequencies (see 6.4)

f) Rated breaking capacity (at rated voltage and at different applied voltages) (see 6.7.2 and 9.5)

g) Pre-arcing and operating time-current characteristics (diagrams) and application class (symbol), where applicable (see 6.6.1 and 9.4.3.3.1)

h) Pre-arcing I^2t characteristic (see 6.8.2.1 and 9.7.2)

i) Operating I^2t characteristic in relation to the voltage with indication of the power factor or time constant (see 6.8.2.2 and 9.7.2)

j) Arc voltage characteristic (see 6.9 and 9.7.5)

k) Cut-off current characteristic (see 6.8.1 and 9.6)

l) Temperature rise at rated current under conventional test conditions and indication of a defined measuring point (see 7.3 and 9.3.5)

m) Power dissipation for at least 50 % and 100 % of the rated current, at fixed points or in the form of a diagram for that range (additional parameters may be 63 % and 80 %) (see 8.3 and 9.3.3)

n) Required minimum operating voltage of the indicator (see 9.4.3.6)

o) Permissible current as a function of the ambient temperature (diagram) (see 9.4.3.2)

p) Instructions for mounting, where necessary, with respect to the dimensions (sketch)

q) Current carrying ability under special conditions of mounting (for example, cross-sectional area of connected conductors, inadequate cooling, additional heat sources, etc.)

~~NOTE In the case of special conditions, the manufacturer should be consulted.~~

Documents
Document Sharing Hub

Full document details: IEC 60269-4 2024 CMV

Annex CC
(normative)

Examples of standardized fuse-links for the protection of semiconductor devices 43

CC.1 General

This annex is divided into seven specific examples of standardised dimensions:

– system of fuse-links with bolted connections, type A – British
– system of fuse-links with bolted connections, type B – DIN
– system of fuse-links with bolted connections, type C – North American
– system of fuse-links with flush end connections, type A
– system of fuse-links with flush end connections, type B – North American
– system of fuse-links with cylindrical contact caps, type A – North American
– system of fuse-links with cylindrical contact caps, type B – French

Fuse-links for the protection of semiconductor devices may also have the same dimensions as fuse-links according to:

– IEC 60269-2: system of fuses A, B, F and H;
– IEC 60269-3: system of fuses A.

In addition to meeting the requirements of this standard, the power dissipation of the fuse-link shall not exceed the acceptable power dissipation of the associated fuse bases or fuse-holders. Where the power dissipation of the fuse-link exceeds the acceptable power dissipation of the standardised fuse base or fuse-holder, de-rating values shall be given by the manufacturer.

CC.2 System of fuse-links with bolted connections, type A – British

CC.2.1 Scope

The following supplementary requirements apply to fuse-links having bolted connections, whose dimensions comply with the requirements given in Figure CC.1 to Figure CC.3. Their rated voltages and currents are as follows:

- 230 V AC up to 900 A;
- 690 V AC up to 710 A.

CC.2.2 Mechanical design (see 8.1 of IEC 60269-1:2024)

The standardized dimensions of the fuse-links are given in Figure CC.1 to Figure CC.3.

CC.2.3 Construction of a fuse-link

For indication of operation, a striker fuse-link may be used. The standardised dimensions of the striker fuse-links are given in Figure CC.4.

Documents
Document Sharing Hub
Full document details: IEC 60269-4 2024 CMV

Dimensions in millimetres

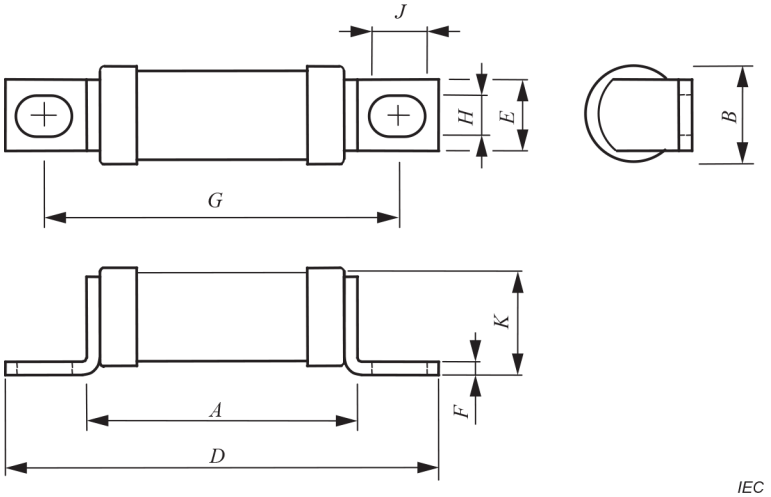

Key

Typical voltage rating V AC	Preferred maximum current rating A	*A* max.	*B* max.	*D* max.	*E* nom.	*F* max.	*G* nom.	*H* nom.	*J* min.	*K* max.
230	20	29	8,7	47,6	6,4	0,9	38	4	4,8	8,8
690	20	55	8,7	75	6,4	0,9	64,5	4	4,8	8,8
230	180	29,2	17,7	58,4	12,7	2,5	42	6,4	7,9	19,3
690	100	50,6	17,7	79,8	12,7	2,5	63,5	6,4	7,9	19,3
230	450	32,6	38,2	85	25,4	3,3	59	10,3	13	41,5
690	355	60	38,2	114	25,4	3,3	85	10,3	13	41,5
NOTE For DC and VSI voltage ratings consult the manufacturer.										

Figure CC.1 – Single body fuse-links

Documents
Document Sharing Hub
Full document details: IEC 60269-4 2024 CMV

Dimensions in millimetres

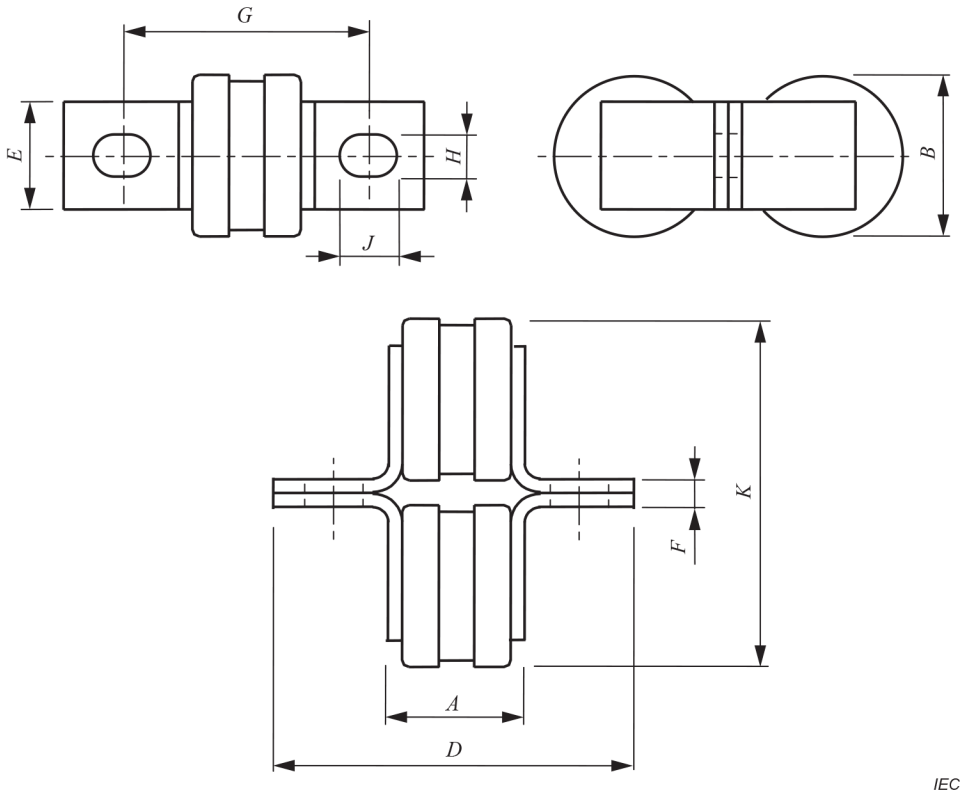

Key

Typical voltage rating V AC	Preferred maximum current rating A	*A* max.	*B* max.	*D* max.	*E* nom.	*F* nom.	*G* nom.	*H* nom.	*J* min.	*K* max.
230	900	32,6	38,2	85	25,4	6,4	59	10,3	13	83
690	710	60	38,2	114	25,4	6,4	85	10,3	13	83
NOTE For DC and VSI voltage ratings consult the manufacturer.										

Figure CC.2 – Double body fuse-links

Documents
Document Sharing Hub
Full document details: IEC 60269-4 2024 CMV

Dimensions in millimetres

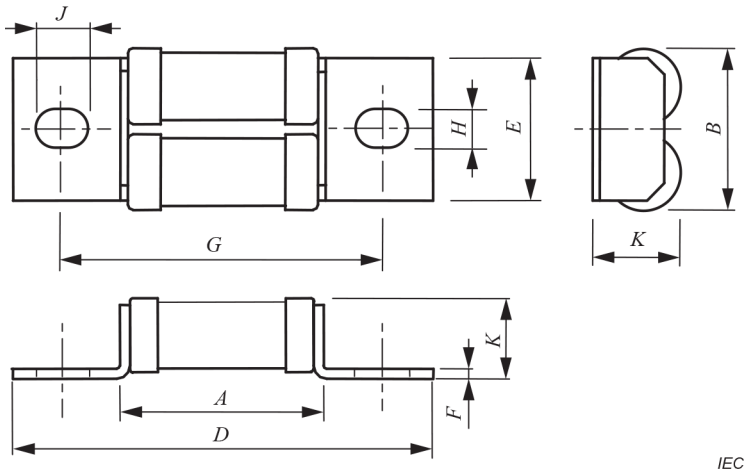

Key

Typical voltage rating V AC	Preferred maximum current rating A	*A* max.	*B* max.	*D* max.	*E* nom.	*F* max.	*G* nom.	*H* nom.	*J* min.	*K* max.
690	200	50,6	37	95	32	1,6	70	8,7	10,3	19,9
NOTE For DC and VSI voltage ratings consult the manufacturer.										

Figure CC.3 – Twin body fuse-links

Dimensions in millimetres

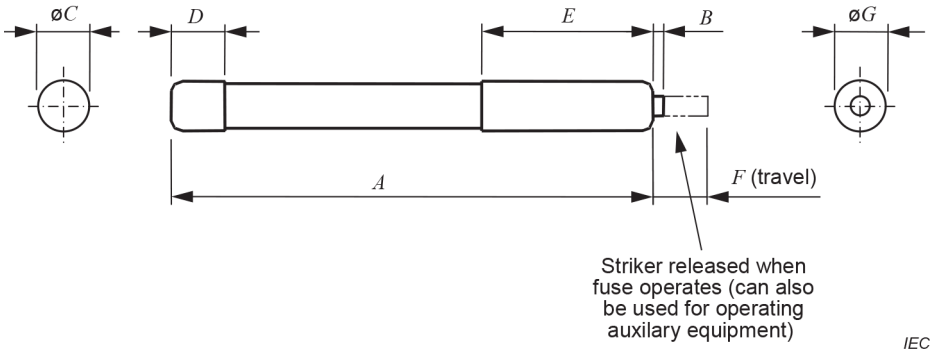

Key

Typical voltage rating V AC	*A* max.	*B* nom.	*ØC* nom.	*D* max.	*E* nom.	*F* nom.	*ØG* max.
230	48	0,8	6,4	5,6	19	5,6	7,9
690	62	0,8	6,4	5,6	19	5,6	7,9
NOTE For DC and VSI voltage ratings consult the manufacturer.							

Figure CC.4 – Striker fuse-links

Documents
Document Sharing Hub
Full document details: IEC 60269-4 2024 CMV

CC.3 System of fuse-links with bolted connections, type B – DIN

CC.3.1 Scope

The following supplementary requirements apply to fuse-links having bolted connections, whose dimensions comply with the requirements given in Figure CC.5 and Figure CC.6. They have rated currents up to 1 250 A and rated voltages up to 1 250 V AC.

~~CC.3.2 Conventional times and currents for “gR” and “gS” fuse-links~~ ~~(see Table CC.1)~~

~~**Table CC.1 – Conventional time and current for "gR" and "gS" fuse-links**~~

~~Rated current~~	~~Conventional time~~	~~Conventional current~~			
		~~Type “gR”~~		~~Type “gS”~~	
~~A~~	~~h~~	~~I_{nf}~~	~~I_f~~	~~I_{nf}~~	~~I_f~~
~~$I_n \leq 4$~~	~~1~~	~~1,1 I_n~~	~~2,1 I_n~~	~~1,5 I_n~~	~~2,1 I_n~~
~~$4 < I_n < 16$~~	~~1~~	~~1,1 I_n~~	~~1,9 I_n~~	~~1,5 I_n~~	~~1,9 I_n~~
~~$16 \leq I_n \leq 63$~~	~~1~~	~~1,1 I_n~~	~~1,6 I_n~~	~~1,25 I_n~~	~~1,6 I_n~~
~~$63 < I_n \leq 160$~~	~~2~~				
~~$160 < I_n \leq 400$~~	~~3~~				
~~$400 < I_n$~~	~~4~~				

CC.3.2 Mechanical design (see 8.1 of IEC 60269-1:2024)

The standardized dimensions of the fuse-links are given in Figure CC.5 and Figure CC.6.

Fuse-links with other fixing dimensions, for example elongated holes, longitudinal or cross-slots, shall be agreed between manufacturer and user.

CC.3.3 Construction of a fuse-link

If the fuse-link is provided with an indicator or striker, then its position has to be agreed between the manufacturer and user.

Documents
Document Sharing Hub
Full document details: IEC 60269-4 2024 CMV

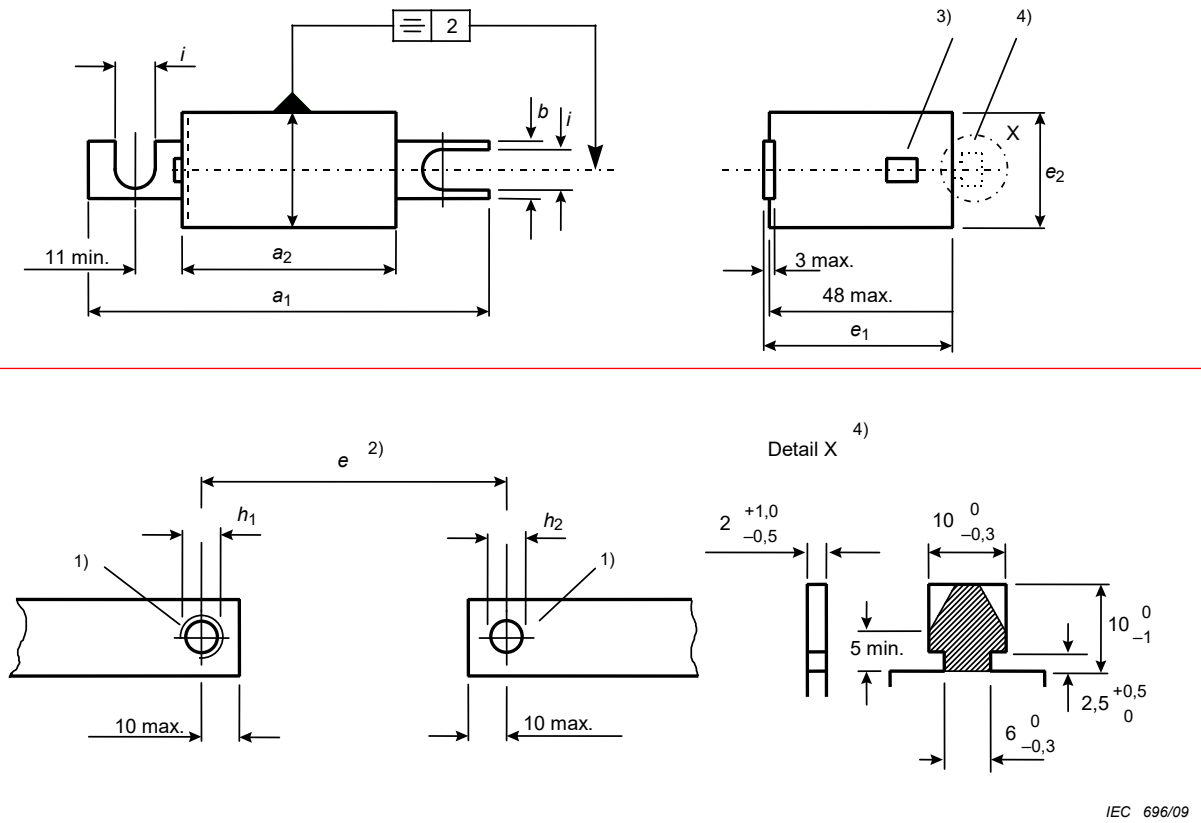

Documents
Document Sharing Hub
Full document details: IEC 60269-4 2024 CMV

Dimensions in millimetres

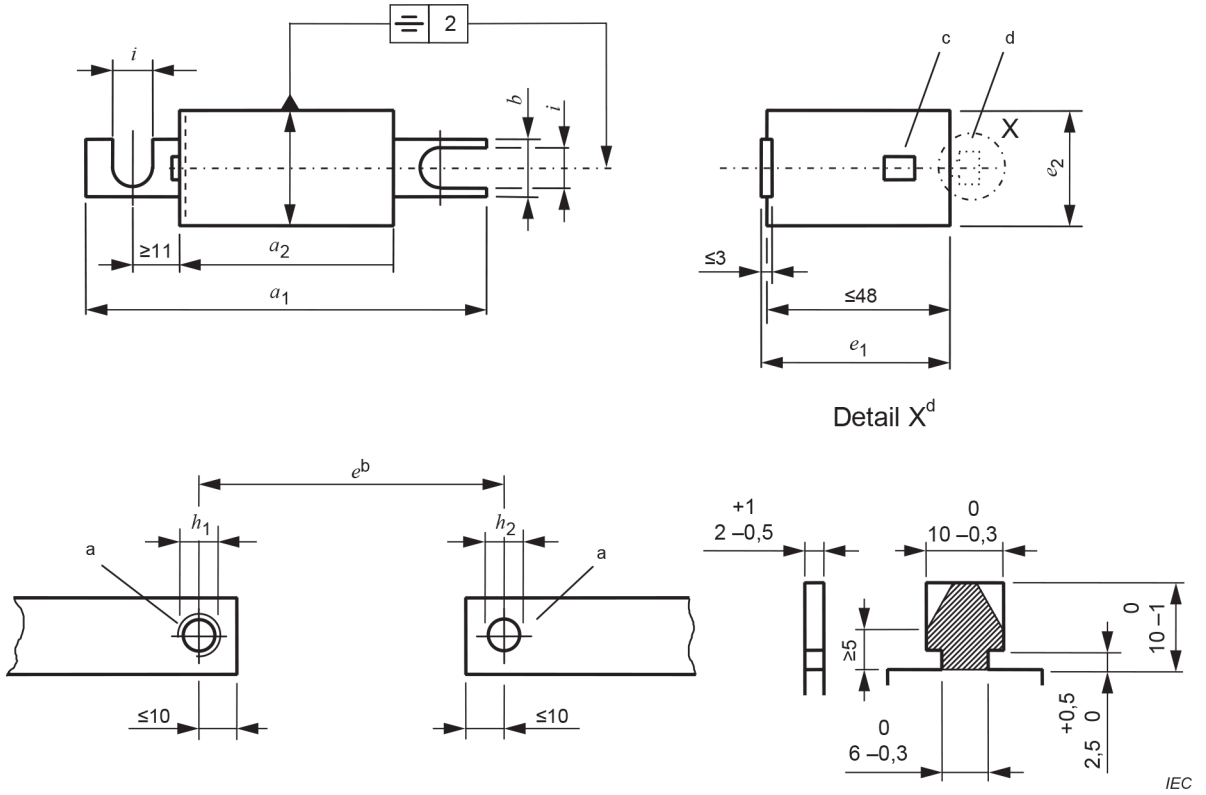

Key

Body size	*e* ±2	*a1* max.	*a2* max.	*b* min.	*e1* max.	*e2* max.	*h1*	*h2* +0,3 0	*i* 0 -0,5
000	80	105	56	20	51	21	M8	9	9
00	80 110	105 140	56 86	20	51	30	M10	11	11

[a] Thread or corresponding through-hole for flat terminations

[b] Distance of terminals

[c] Indicator or striker (if required)

[d] Lug for signalling device (if required)

Figure CC.5 – Fuse-links with bolted connections, type B, body sizes 000 and 00

Documents
Document Sharing Hub
Full document details: IEC 60269-4 2024 CMV

Dimensions in millimetres

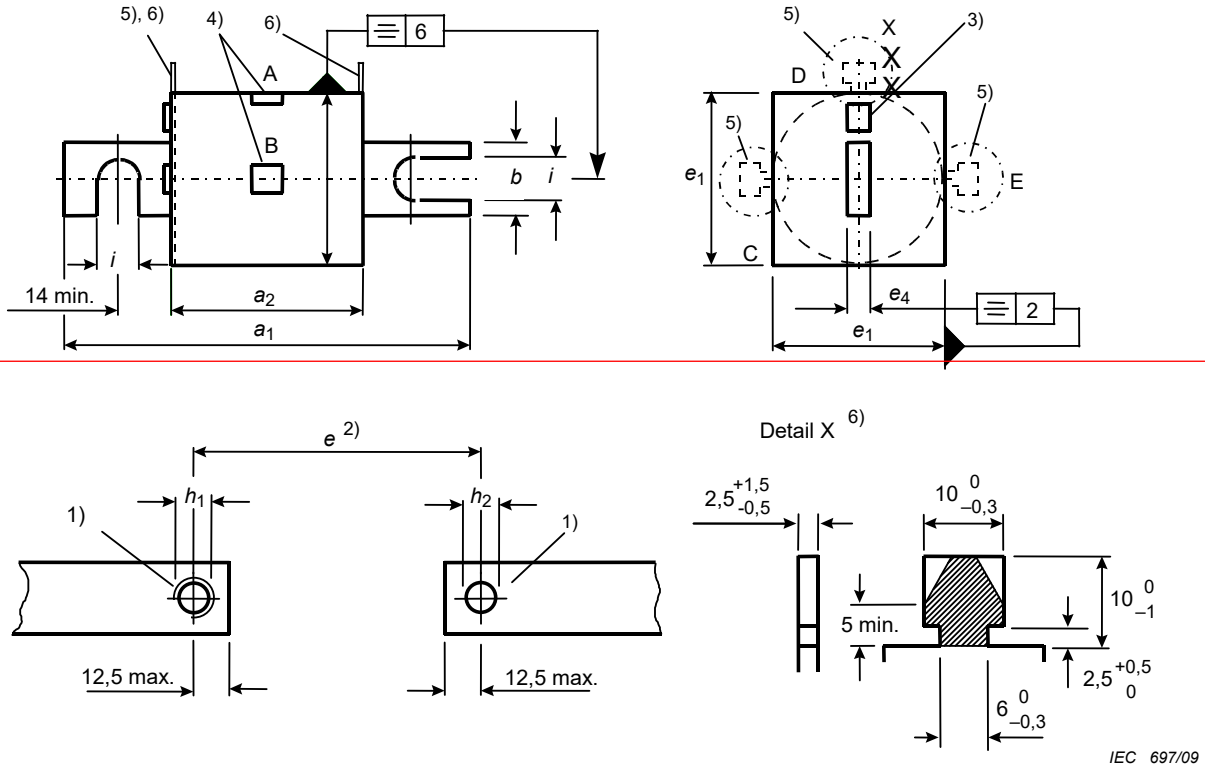

Documents
Document Sharing Hub
Full document details: IEC 60269-4 2024 CMV

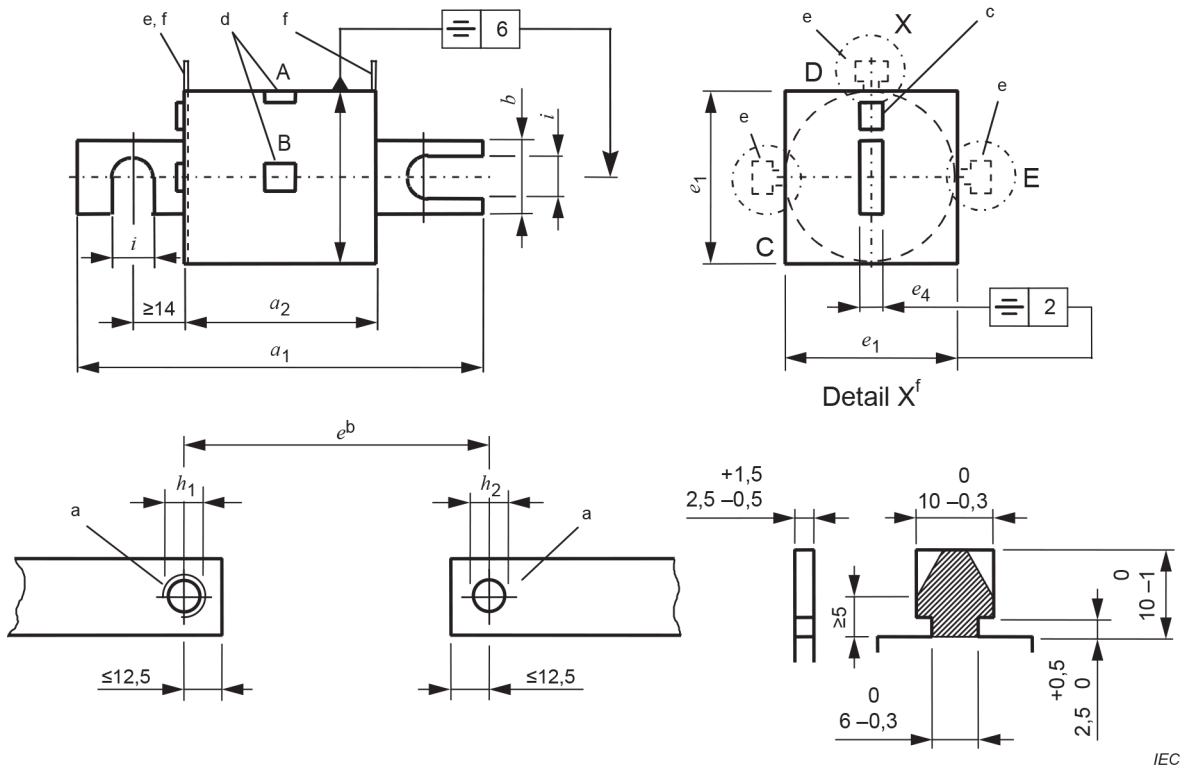

Key

Body size	e ± 2	a_1 max.	a_2 max.	b min.	e_1 max.	e_4 max.	h_1	h_2 +0,3 0	i 0 -0,5
0	80 110	110 150	50 80	19	45	6,5	M10	11	11
1	80 110	110 150	50 80	24	53	6,5	M10	11	11
2	80 110	110 150	50 80	24	61	6,5	M10	11	11
3	80 110 170 210	110 150 210 250	50 80 140 180	29	76	6,5	M12 7)	13	13 8)

1) Thread or corresponding through-hole for flat terminations

2) Distance of terminals

3) Indicator or striker (if required)

4) Indicator or striker, position A or B (if required)

5) Alternative positions C, D and E for lug for signalling device (if required)

6) Gripping lugs, dimensions according to Figure 101 of IEC 60269-2: 2013/AMD2:2024 (if required)

7) M10 also possible

8) 11 also possible for M10

Figure CC.6 – Fuse-links with bolted connections, type B, body sizes 0, 1, 2 and 3

Documents
Document Sharing Hub
Full document details: IEC 60269-4 2024 CMV