IEC 60297-3-100

Edition 1.0 2008-11

INTERNATIONAL STANDARD

NORME INTERNATIONALE

Mechanical structures for electronic equipment – Dimensions of mechanical structures of the 482,6 mm (19 in) series – Part 3-100: Basic dimensions of front panels, subracks, chassis, racks and cabinets

Structures mécaniques pour équipements électroniques – Dimensions des structures mécaniques de la série 482,6 mm (19 pouces) – Partie 3-100: Dimensions de base des panneaux avant, des bacs, des châssis, des bâtis et des baies

IEC 60297-3-100:2008

Documents
Document Sharing Hub

Full document details: IEC 60297-3-100 2008

THIS PUBLICATION IS COPYRIGHT PROTECTED

Copyright © 2008 IEC, Geneva, Switzerland

All rights reserved. Unless otherwise specified, no part of this publication may be reproduced or utilized in any form or by any means, electronic or mechanical, including photocopying and microfilm, without permission in writing from either IEC or IEC's member National Committee in the country of the requester.
If you have any questions about IEC copyright or have an enquiry about obtaining additional rights to this publication, please contact the address below or your local IEC member National Committee for further information.

Droits de reproduction réservés. Sauf indication contraire, aucune partie de cette publication ne peut être reproduite ni utilisée sous quelque forme que ce soit et par aucun procédé, électronique ou mécanique, y compris la photocopie et les microfilms, sans l'accord écrit de la CEI ou du Comité national de la CEI du pays du demandeur.
Si vous avez des questions sur le copyright de la CEI ou si vous désirez obtenir des droits supplémentaires sur cette publication, utilisez les coordonnées ci-après ou contactez le Comité national de la CEI de votre pays de résidence.

IEC Central Office
3, rue de Varembé
CH-1211 Geneva 20
Switzerland
Email: inmail@iec.ch
Web: www.iec.ch

About the IEC

The International Electrotechnical Commission (IEC) is the leading global organization that prepares and publishes International Standards for all electrical, electronic and related technologies.

About IEC publications

The technical content of IEC publications is kept under constant review by the IEC. Please make sure that you have the latest edition, a corrigenda or an amendment might have been published.

- Catalogue of IEC publications: www.iec.ch/searchpub
The IEC on-line Catalogue enables you to search by a variety of criteria (reference number, text, technical committee,…). It also gives information on projects, withdrawn and replaced publications.
- IEC Just Published: www.iec.ch/online_news/justpub
Stay up to date on all new IEC publications. Just Published details twice a month all new publications released. Available on-line and also by email.
- Electropedia: www.electropedia.org
The world's leading online dictionary of electronic and electrical terms containing more than 20 000 terms and definitions in English and French, with equivalent terms in additional languages. Also known as the International Electrotechnical Vocabulary online.
- Customer Service Centre: www.iec.ch/webstore/custserv
If you wish to give us your feedback on this publication or need further assistance, please visit the Customer Service Centre FAQ or contact us:
Email: csc@iec.ch
Tel.: +41 22 919 02 11
Fax: +41 22 919 03 00

A propos de la CEI

La Commission Electrotechnique Internationale (CEI) est la première organisation mondiale qui élabore et publie des normes internationales pour tout ce qui a trait à l'électricité, à l'électronique et aux technologies apparentées.

A propos des publications CEI

Le contenu technique des publications de la CEI est constamment revu. Veuillez vous assurer que vous possédez l'édition la plus récente, un corrigendum ou amendement peut avoir été publié.

- Catalogue des publications de la CEI: www.iec.ch/searchpub/cur_fut-f.htm
Le Catalogue en-ligne de la CEI vous permet d'effectuer des recherches en utilisant différents critères (numéro de référence, texte, comité d'études,…). Il donne aussi des informations sur les projets et les publications retirées ou remplacées.
- Just Published CEI: www.iec.ch/online_news/justpub
Restez informé sur les nouvelles publications de la CEI. Just Published détaille deux fois par mois les nouvelles publications parues. Disponible en-ligne et aussi par email.
- Electropedia: www.electropedia.org
Le premier dictionnaire en ligne au monde de termes électroniques et électriques. Il contient plus de 20 000 termes et définitions en anglais et en français, ainsi que les termes équivalents dans les langues additionnelles. Egalement appelé Vocabulaire Electrotechnique International en ligne.
- Service Clients: www.iec.ch/webstore/custserv/custserv_entry-f.htm
Si vous désirez nous donner des commentaires sur cette publication ou si vous avez des questions, visitez le FAQ du Service clients ou contactez-nous:
Email: csc@iec.ch
Tél.: +41 22 919 02 11
Fax: +41 22 919 03 00

Documents
Document Sharing Hub

Full document details: IEC 60297-3-100 2008

IEC 60297-3-100

Edition 1.0 2008-11

INTERNATIONAL STANDARD

NORME INTERNATIONALE

Mechanical structures for electronic equipment – Dimensions of mechanical structures of the 482,6 mm (19 in) series – Part 3-100: Basic dimensions of front panels, subracks, chassis, racks and cabinets

Structures mécaniques pour équipements électroniques – Dimensions des structures mécaniques de la série 482,6 mm (19 pouces) – Partie 3-100: Dimensions de base des panneaux avant, des bacs, des châssis, des bâtis et des baies

INTERNATIONAL
ELECTROTECHNICAL
COMMISSION

COMMISSION
ELECTROTECHNIQUE
INTERNATIONALE

PRICE CODE
CODE PRIX N

ICS 31.240

ISBN 978-2-88910-095-8

® Registered trademark of the International Electrotechnical Commission
Marque déposée de la Commission Electrotechnique Internationale

Documents
Document Sharing Hub

Full document details: IEC 60297-3-100 2008

CONTENTS

FOREWORD 3
INTRODUCTION 5
1 Scope 6
2 Normative references 6
3 Terms and definitions 6
4 Arrangement overview 6
5 Front panels 8
5.1 Front panel dimensions 8
5.2 Front panel mounting hole positions. 10
6 Racks 11
6.1 Rack description 11
6.2 Rack/cabinet mounting grid types I and II 12
7 Cabinet 13
7.1 Cabinet description 13
7.2 Dimensions of cabinets type A 13
7.3 Dimensions of cabinets type B 14
Bibliography 15

Figure 1 – Arrangement overview 7
Figure 2 – Front panel dimensions for 1U up to 6U 8
Figure 3 – Front panel dimensions for 6U up to 12U 9
Figure 4 – Front panel mounting hole positions 10
Figure 5 – Array of racks 11
Figure 6 – Rack/cabinet mounting grid 12
Figure 7 – Dimensions of cabinet type A 13
Figure 8 – Dimensions of cabinet type B 14

Table 1 – Front panel dimensions for 1U up to 6U 8
Table 2 – Front panel dimensions for 6U up to 12U 9
Table 3 – Width dimension of fixed rack structures 11
Table 4 – Dimensions of cabinet types A and B 14

Documents
Document Sharing Hub

Full document details: IEC 60297-3-100 2008

INTERNATIONAL ELECTROTECHNICAL COMMISSION

MECHANICAL STRUCTURES FOR ELECTRONIC EQUIPMENT – DIMENSIONS OF MECHANICAL STRUCTURES OF THE 482,6 mm (19 in) SERIES –

Part 3-100: Basic dimensions of front panels, subracks, chassis, racks and cabinets

FOREWORD

1) The International Electrotechnical Commission (IEC) is a worldwide organization for standardization comprising all national electrotechnical committees (IEC National Committees). The object of IEC is to promote international co-operation on all questions concerning standardization in the electrical and electronic fields. To this end and in addition to other activities, IEC publishes International Standards, Technical Specifications, Technical Reports, Publicly Available Specifications (PAS) and Guides (hereafter referred to as "IEC Publication(s)"). Their preparation is entrusted to technical committees; any IEC National Committee interested in the subject dealt with may participate in this preparatory work. International, governmental and non-governmental organizations liaising with the IEC also participate in this preparation. IEC collaborates closely with the International Organization for Standardization (ISO) in accordance with conditions determined by agreement between the two organizations.
2) The formal decisions or agreements of IEC on technical matters express, as nearly as possible, an international consensus of opinion on the relevant subjects since each technical committee has representation from all interested IEC National Committees.
3) IEC Publications have the form of recommendations for international use and are accepted by IEC National Committees in that sense. While all reasonable efforts are made to ensure that the technical content of IEC Publications is accurate, IEC cannot be held responsible for the way in which they are used or for any misinterpretation by any end user.
4) In order to promote international uniformity, IEC National Committees undertake to apply IEC Publications transparently to the maximum extent possible in their national and regional publications. Any divergence between any IEC Publication and the corresponding national or regional publication shall be clearly indicated in the latter.
5) IEC provides no marking procedure to indicate its approval and cannot be rendered responsible for any equipment declared to be in conformity with an IEC Publication.
6) All users should ensure that they have the latest edition of this publication.
7) No liability shall attach to IEC or its directors, employees, servants or agents including individual experts and members of its technical committees and IEC National Committees for any personal injury, property damage or other damage of any nature whatsoever, whether direct or indirect, or for costs (including legal fees) and expenses arising out of the publication, use of, or reliance upon, this IEC Publication or any other IEC Publications.
8) Attention is drawn to the Normative references cited in this publication. Use of the referenced publications is indispensable for the correct application of this publication.
9) Attention is drawn to the possibility that some of the elements of this IEC Publication may be the subject of patent rights. IEC shall not be held responsible for identifying any or all such patent rights.

International Standard IEC 60297-3-100 has been prepared by subcommittee 48D: Mechanical structures for electronic equipment, of IEC technical committee 48: Electromechanical components and mechanical structures for electronic equipment.

This standard cancels and replaces IEC 60297-1 and IEC 60297-2.

The text of this standard is based on the following documents:

FDIS	Report on voting
48D/380/FDIS	48D/386/RVD

Full information on the voting for the approval of this standard can be found in the report on voting indicated in the above table.

AVA Documents
Document Sharing Hub

Full document details: IEC 60297-3-100 2008

This publication has been drafted in accordance with the ISO/IEC Directives, Part 2.

A list of all parts of IEC 60297 series, published under the general title *Mechanical structures for electronic equipment – Dimensions of mechanical structures of the 482,6 mm (19 in) series,* can be found on the IEC website.

The committee has decided that the contents of this publication will remain unchanged until the maintenance result date indicated on the IEC web site under "http://webstore.iec.ch" in the data related to the specific publication. At this date, the publication will be

- reconfirmed,
- withdrawn,
- replaced by a revised edition, or
- amended.

Documents
Document Sharing Hub

Full document details: IEC 60297-3-100 2008

INTRODUCTION

This part of IEC 60297 has been developed by merging IEC 60297-1 and IEC 60297-2 into one document. Both parts are reworked in order to meet the latest market requirements of the electronics industry. The purpose is also to create an updated documentation and to improve the drawings and descriptions of the contents. Some parts of this standard contain dimensions of IEC 60917-2-1 and ETSI EN 300119. The merge of the two parts into one updates the scope and improves the overview of the modular order, describing the relationship between front panels, subracks, chassis, racks and cabinets.

Documents
Document Sharing Hub

Full document details: IEC 60297-3-100 2008

MECHANICAL STRUCTURES FOR ELECTRONIC EQUIPMENT – DIMENSIONS OF MECHANICAL STRUCTURES OF THE 482,6 mm (19 in) SERIES –

Part 3-100: Basic dimensions of front panels, subracks, chassis, racks and cabinets

1 Scope

This part of IEC 60297 specifies the basic dimensions of front panels, subracks, chassis, racks and cabinets of the 482,6 mm (19 in) series. Subsequent standards of the associated IEC 60297-3 series provides detail dimensions for specific parts of the equipment practice, where the basic dimensions are used as interface to other associated parts.

2 Normative references

The following referenced documents are indispensable for the application of this document. For dated references, only the edition cited applies. For undated references, the latest edition of the referenced document (including any amendments) applies.

IEC 60050-581, *International Electrotechnical Vocabulary – Chapter 581: Electromechanical components for electronic equipment*

IEC 60297-3-101, *Mechanical structures for electronic equipment – Dimensions of mechanical structures of the 482,6 mm (19 in) series – Part 3-101: Subracks and associated plug-in units*

IEC 60917-1, *Modular order for the development of mechanical structures for electronic equipment practices – Part 1: Generic standard*

ETSI EN 300119-3, *Equipment engineering (EE)-European telecommunication standard for equipment practice – Part 3: Engineering requirements for miscellaneous racks and cabinets*

3 Terms and definitions

For the purposes of this document, the terms and definitions of IEC 60917-1 and IEC 60050-581 apply, as well as the following.

3.1
plinth/base
additional structure or an integrated structure of the cabinet/rack to be used for transport, cable feed, (seismic) anchoring, or provide a safety or convenience distance to the floor level

3.2
vertical member
structural part of a rack/cabinet providing mounting holes for front panels, chassis and subracks

4 Arrangement overview

Figure 1 illustrates the relationship of front panels, subracks, chassis, racks and cabinets. The cabinet is usually assembled with vertical members which are the mounting parts for the

AVA Documents
Document Sharing Hub

Full document details: IEC 60297-3-100 2008

assembly of front panels, subracks and chassis. Racks as defined in IEC 60917-1 are open structures of pairs of vertical members without any covers (see 6.1).

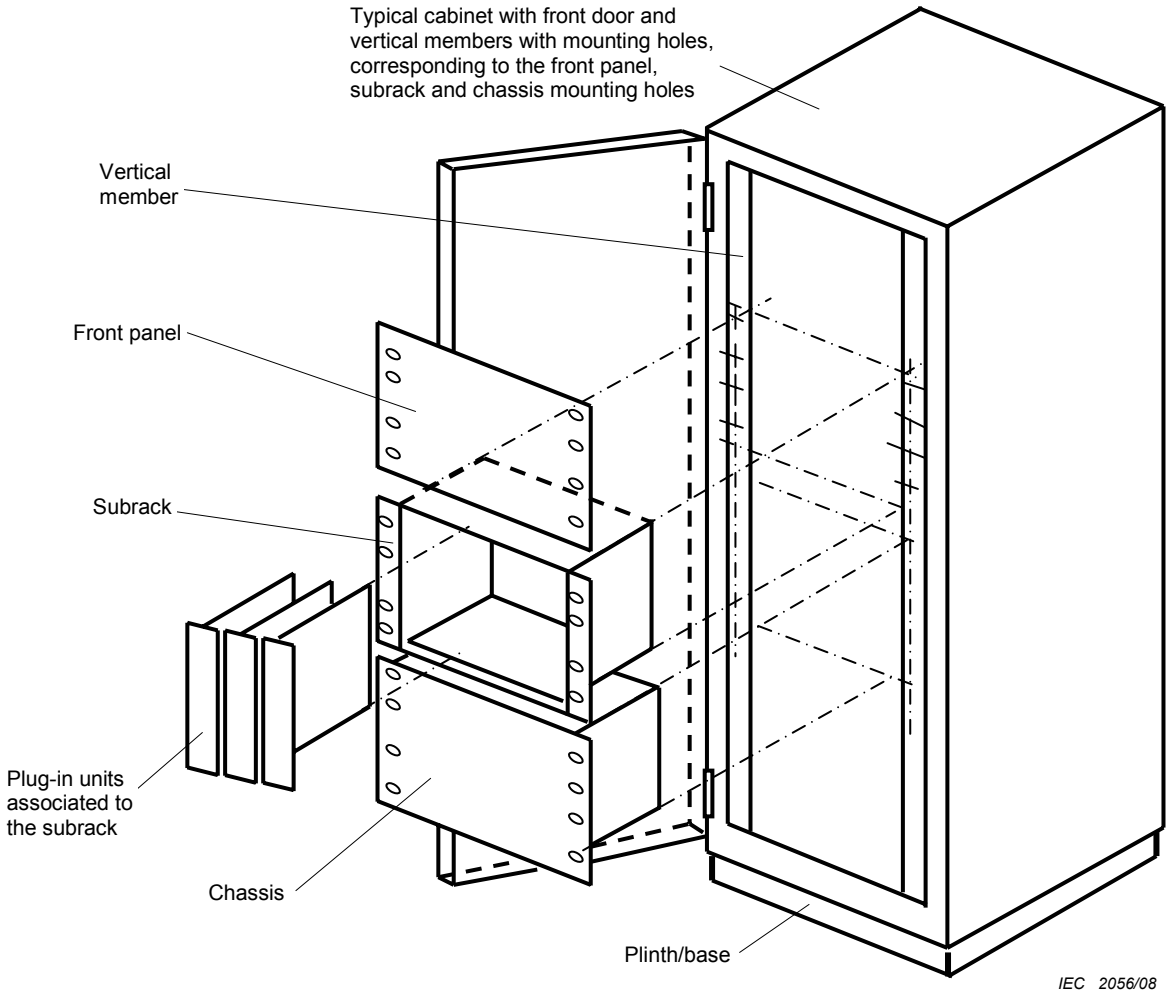

Figure 1 – Arrangement overview

Documents
Document Sharing Hub
Full document details: IEC 60297-3-100 2008

5 Front panels

5.1 Front panel dimensions

The height increment of a front panel is 1U, equal to 44,45 mm. There are two mounting hole types as shown in detail “A”. The front panel thickness is not defined by this standard. As shown in Figures 2 and 3 and Tables 1 and 2, front panels of 1U, 2U and 6U heights may be provided with different number of mounting holes. The higher number of mounting holes may be used in case of high load applied to the front panel or other stability requirements. For 6U front panels two types of hole spacing are possible (see Table1 and Table 2). The front panel dimensions apply also to chassis and subracks.

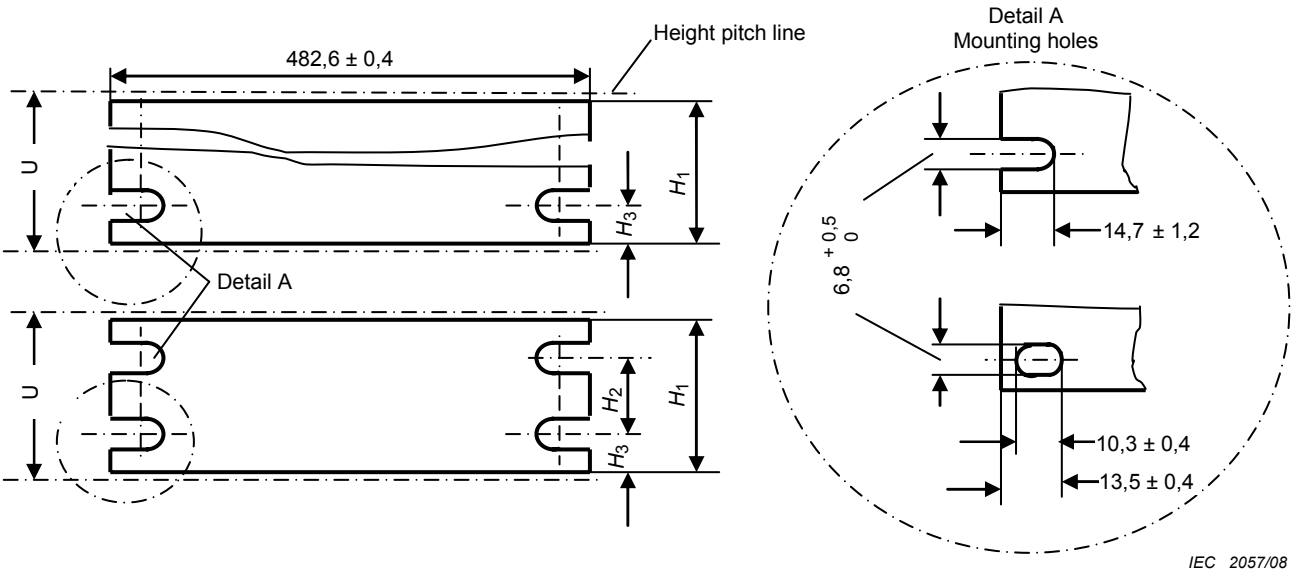

Dimensions in millimetres

Figure 2 – Front panel dimensions for 1U up to 6U

Table 1 – Front panel dimensions for 1U up to 6U

Height units $n \times$ U	H_1 ± 0,4	H_2 ± 0,4	H_3 ± 0,4
1U (44,45)	43,65	–	21,83
		31,75	5,95
2U (88,90)	88,10	44,45	21,83
		76,20	5,95
3*U* (133,35)	132,55	57,15	37,70
4U (177,80)	177,00	101,60	37,70
5U (222,25)	221,45	146,05	37,70
6U (266,70)	265,90	190,50	37,70

Dimensions are in millimetres and the tolerances are non-cumulative.

Documents
Document Sharing Hub
Full document details: IEC 60297-3-100 2008

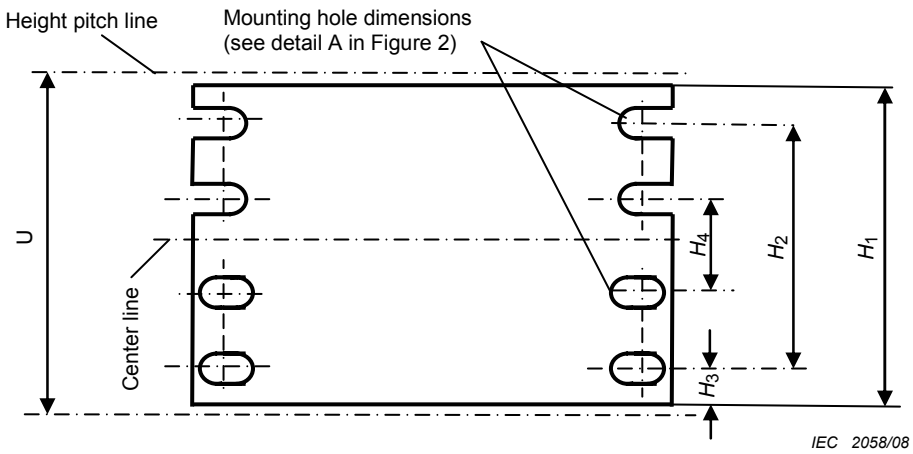

Figure 3 – Front panel dimensions for 6U up to 12U

Table 2 – Front panel dimensions for 6U up to 12U

Height units $n \times$ U	H_1 ± 0,4	H_2 ± 0,4	H_3 ± 0,4	H_4 ± 0,4
6U (266,70)	265,90	190,50	37,70	76,20
7U (311,15)	310,35	234,95	37,70	57,15
8U (355,60)	354,80	279,40	37,70	76,20
9U (400,05)	399,25	323,85	37,70	120,65
10U (444,50)	443,70	368,30	37,70	165,10
11U (488,95)	488,15	412,75	37,70	146,05
12U (533,40)	532,60	457,20	37,70	190,50

Dimensions are in millimetres and tolerances are non-cumulative.

Documents
Document Sharing Hub
Full document details: IEC 60297-3-100 2008