IEC 60297-3-101

Edition 1.0 2004-08

INTERNATIONAL STANDARD

NORME INTERNATIONALE

Mechanical structures for electronic equipment – Dimensions of mechanical structures of the 482,6 mm (19 in) series – Part 3-101: Subracks and associated plug-in units

Structures mécaniques pour équipements électroniques – Dimensions des structures mécaniques de la série 482,6 mm (19 in) – Partie 3-101: Bacs et blocs enfichables associés

IEC 60297-3-101:2004

Documents
Document Sharing Hub

Full document details: IEC 60297-3-101 2004

THIS PUBLICATION IS COPYRIGHT PROTECTED

Copyright © 2004 IEC, Geneva, Switzerland

All rights reserved. Unless otherwise specified, no part of this publication may be reproduced or utilized in any form or by any means, electronic or mechanical, including photocopying and microfilm, without permission in writing from either IEC or IEC's member National Committee in the country of the requester.
If you have any questions about IEC copyright or have an enquiry about obtaining additional rights to this publication, please contact the address below or your local IEC member National Committee for further information.

Droits de reproduction réservés. Sauf indication contraire, aucune partie de cette publication ne peut être reproduite ni utilisée sous quelque forme que ce soit et par aucun procédé, électronique ou mécanique, y compris la photocopie et les microfilms, sans l'accord écrit de la CEI ou du Comité national de la CEI du pays du demandeur.
Si vous avez des questions sur le copyright de la CEI ou si vous désirez obtenir des droits supplémentaires sur cette publication, utilisez les coordonnées ci-après ou contactez le Comité national de la CEI de votre pays de résidence.

IEC Central Office
3, rue de Varembé
CH-1211 Geneva 20
Switzerland
Email: inmail@iec.ch
Web: www.iec.ch

About the IEC

The International Electrotechnical Commission (IEC) is the leading global organization that prepares and publishes International Standards for all electrical, electronic and related technologies.

About IEC publications

The technical content of IEC publications is kept under constant review by the IEC. Please make sure that you have the latest edition, a corrigenda or an amendment might have been published.

- Catalogue of IEC publications: www.iec.ch/searchpub
The IEC on-line Catalogue enables you to search by a variety of criteria (reference number, text, technical committee,…). It also gives information on projects, withdrawn and replaced publications.
- IEC Just Published: www.iec.ch/online_news/justpub
Stay up to date on all new IEC publications. Just Published details twice a month all new publications released. Available on-line and also by email.
- Electropedia: www.electropedia.org
The world's leading online dictionary of electronic and electrical terms containing more than 20 000 terms and definitions in English and French, with equivalent terms in additional languages. Also known as the International Electrotechnical Vocabulary online.
- Customer Service Centre: www.iec.ch/webstore/custserv
If you wish to give us your feedback on this publication or need further assistance, please visit the Customer Service Centre FAQ or contact us:
Email: csc@iec.ch
Tel.: +41 22 919 02 11
Fax: +41 22 919 03 00

A propos de la CEI

La Commission Electrotechnique Internationale (CEI) est la première organisation mondiale qui élabore et publie des normes internationales pour tout ce qui a trait à l'électricité, à l'électronique et aux technologies apparentées.

A propos des publications CEI

Le contenu technique des publications de la CEI est constamment revu. Veuillez vous assurer que vous possédez l'édition la plus récente, un corrigendum ou amendement peut avoir été publié.

- Catalogue des publications de la CEI: www.iec.ch/searchpub/cur_fut-f.htm
Le Catalogue en-ligne de la CEI vous permet d'effectuer des recherches en utilisant différents critères (numéro de référence, texte, comité d'études,…). Il donne aussi des informations sur les projets et les publications retirées ou remplacées.
- Just Published CEI: www.iec.ch/online_news/justpub
Restez informé sur les nouvelles publications de la CEI. Just Published détaille deux fois par mois les nouvelles publications parues. Disponible en-ligne et aussi par email.
- Electropedia: www.electropedia.org
Le premier dictionnaire en ligne au monde de termes électroniques et électriques. Il contient plus de 20 000 termes et définitions en anglais et en français, ainsi que les termes équivalents dans les langues additionnelles. Egalement appelé Vocabulaire Electrotechnique International en ligne.
- Service Clients: www.iec.ch/webstore/custserv/custserv_entry-f.htm
Si vous désirez nous donner des commentaires sur cette publication ou si vous avez des questions, visitez le FAQ du Service clients ou contactez-nous:
Email: csc@iec.ch
Tél.: +41 22 919 02 11
Fax: +41 22 919 03 00

Documents
Document Sharing Hub

Full document details: IEC 60297-3-101 2004

IEC 60297-3-101

Edition 1.0 2004-08

INTERNATIONAL STANDARD

NORME INTERNATIONALE

Mechanical structures for electronic equipment – Dimensions of mechanical structures of the 482,6 mm (19 in) series – Part 3-101: Subracks and associated plug-in units

Structures mécaniques pour équipements électroniques – Dimensions des structures mécaniques de la série 482,6 mm (19 in) – Partie 3-101: Bacs et blocs enfichables associés

INTERNATIONAL
ELECTROTECHNICAL
COMMISSION

COMMISSION
ELECTROTECHNIQUE
INTERNATIONALE

PRICE CODE
CODE PRIX **S**

ICS 31.240

ISBN 978-2-88912-673-6

® Registered trademark of the International Electrotechnical Commission
Marque déposée de la Commission Electrotechnique Internationale

Documents
Document Sharing Hub

Full document details: IEC 60297-3-101 2004

CONTENTS

FOREWORD ... 3
INTRODUCTION ... 5

1 Scope and object ... 6
2 Normative references ... 6
3 Terms and definitions ... 7
4 Arrangement overview ... 7
5 Subrack dimensions, front mounting area ... 8
6 Subrack dimensions, rear mounting area ... 11
7 Printed board type plug-in units, front mounted ... 13
8 Box type plug-in units, front mounted ... 15
9 Printed board type plug-in units, rear mounted ... 17
10 Subrack and plug-in units with electromagnetic shielding provisions ... 18
11 Plug-in units electrostatic discharge provisions ... 20
12 Dimensions used in the figures ... 22

Figure 1 – Relationship between the new IEC 60297-3 series and the old IEC 60297 series ... 5
Figure 2 – Arrangement overview ... 7
Figure 3 – Subrack dimensions, front mounting area – Part 1 ... 8
Figure 4 – Subrack dimensions, front mounting area – Part 2 ... 9
Figure 5 – Subrack dimensions, front mounting area – Part 3 ... 10
Figure 6 – Subrack dimensions, rear mounting area ... 11
Figure 7 – Printed board type plug-in unit, 3U ... 13
Figure 8 – Printed board type plug-in unit, 6U ... 14
Figure 9 – Printed board type plug-in unit, 9U ... 14
Figure 10 – Box type plug-in unit, 3U ... 15
Figure 11 – Box type plug-in unit, 6U ... 16
Figure 12 – Box type plug-in unit, 9U ... 16
Figure 13 – Printed board type plug-in units, rear mounting dimensions ... 17
Figure 14 – Subrack shielding interface dimensions ... 18
Figure 15 – Plug-in unit and filler panels shielding interface dimensions ... 19
Figure 16 – ESD contact interface dimensions ... 20
Figure 17 – ESD strip interface dimensions ... 20

Table 1 – RD1 dimensions ... 11
Table 2 – Depth dimensions RD3, RD4 ... 17
Table 3 – Height dimensions ... 21
Table 4 – Depth dimensions ... 21

Documents
Document Sharing Hub
Full document details: IEC 60297-3-101 2004

INTERNATIONAL ELECTROTECHNICAL COMMISSION

MECHANICAL STRUCTURES FOR ELECTRONIC EQUIPMENT – DIMENSIONS OF MECHANICAL STRUCTURES OF THE 482,6 mm (19 in) SERIES –

Part 3-101: Subracks and associated plug-in units

FOREWORD

1) The International Electrotechnical Commission (IEC) is a worldwide organization for standardization comprising all national electrotechnical committees (IEC National Committees). The object of IEC is to promote international co-operation on all questions concerning standardization in the electrical and electronic fields. To this end and in addition to other activities, IEC publishes International Standards, Technical Specifications, Technical Reports, Publicly Available Specifications (PAS) and Guides (hereafter referred to as "IEC Publication(s)"). Their preparation is entrusted to technical committees; any IEC National Committee interested in the subject dealt with may participate in this preparatory work. International, governmental and non-governmental organizations liaising with the IEC also participate in this preparation. IEC collaborates closely with the International Organization for Standardization (ISO) in accordance with conditions determined by agreement between the two organizations.
2) The formal decisions or agreements of IEC on technical matters express, as nearly as possible, an international consensus of opinion on the relevant subjects since each technical committee has representation from all interested IEC National Committees.
3) IEC Publications have the form of recommendations for international use and are accepted by IEC National Committees in that sense. While all reasonable efforts are made to ensure that the technical content of IEC Publications is accurate, IEC cannot be held responsible for the way in which they are used or for any misinterpretation by any end user.
4) In order to promote international uniformity, IEC National Committees undertake to apply IEC Publications transparently to the maximum extent possible in their national and regional publications. Any divergence between any IEC Publication and the corresponding national or regional publication shall be clearly indicated in the latter.
5) IEC provides no marking procedure to indicate its approval and cannot be rendered responsible for any equipment declared to be in conformity with an IEC Publication.
6) All users should ensure that they have the latest edition of this publication.
7) No liability shall attach to IEC or its directors, employees, servants or agents including individual experts and members of its technical committees and IEC National Committees for any personal injury, property damage or other damage of any nature whatsoever, whether direct or indirect, or for costs (including legal fees) and expenses arising out of the publication, use of, or reliance upon, this IEC Publication or any other IEC Publications.
8) Attention is drawn to the Normative references cited in this publication. Use of the referenced publications is indispensable for the correct application of this publication.
9) Attention is drawn to the possibility that some of the elements of this IEC Publication may be the subject of patent rights. IEC shall not be held responsible for identifying any or all such patent rights.

International Standard IEC 60297-3-101 has been prepared by subcommittee 48D: Mechanical structures for electronic equipment, of IEC technical committee 48: Electro-mechanical components and mechanical structures for electronic equipment.

This standard cancels and replaces IEC 60297-3, IEC 60297-4, IEC 60297-5-100, IEC 60297-5-102, IEC 60297-5-103, IEC 60297-5-107.

This bilingual version corresponds to the monolingual English version, published in 2004-08.

AVA Documents
Document Sharing Hub

Full document details: IEC 60297-3-101 2004

The text of this standard is based on following documents:

FDIS	Report on voting
48D/299/FDIS	48D/306/RVD

Full information on the voting for the approval of this standard can be found in the report on voting indicated in the above table.

The French version of this standard has not been voted upon.

This publication has been drafted in accordance with the ISO/IEC Directives, Part 2.

The IEC 60297-3 series consists of the following parts, under the general title *Mechanical structures for electronic equipment – Dimensions of mechanical structures of the 482,6 mm (19 in) series*

Part 3-101: Subracks and associated plug-in units

Part 3-102: Injector/extractor handle

Part 3-103: Keying and alignment pin

The committee has decided that the contents of this publication will remain unchanged until the maintenance result date indicated on the IEC web site under "http://webstore.iec.ch" in the data related to the specific publication. At this date, the publication will be

- reconfirmed;
- withdrawn;
- replaced by a revised edition, or
- amended.

Documents
Document Sharing Hub

Full document details: IEC 60297-3-101 2004

INTRODUCTION

The Dimensions of mechanical structures of the 482,6 mm (19 in) standards are defined in IEC 60297. To the original IEC 60297-3:1988 publication was added Amendment 1:1995. The additional requirements were published in IEC 60297-4:1995 with Amendment 1:1999.

The extended requirements were published in the IEC 60297-5-1XX series (2001). Responding to market requirements and for more clarity it became necessary to merge and technically enhance these standard parts into 3 new standards for subracks and associated plug-in units. This merged standard series now defined as IEC 60297-3-101, IEC 60297-3-102 and IEC 60297-3-103 explains its relationship to the previous fragmented IEC 60297-X standards, see Figure 1.

The nomenclature of these new standards has been revised. The relationship to IEC 60297-1 (Part 1: Panels and racks) has been maintained. The relationship to IEC 60297-2 (Part 2: Cabinets and pitches of rack structures) has been maintained. The relationship to IEC 61587-1 (Part 1: Climatic, mechanical tests and safety aspects for cabinets, racks, subracks and chassis) and IEC/TS 61587-3 (Part 3: Electromagnetic shielding performance tests for cabinets, racks and subracks) has been added.

IEC 60297-3-101 defines the interfaces of the basic 482,6 mm (19 in) subrack and associated plug-in units.

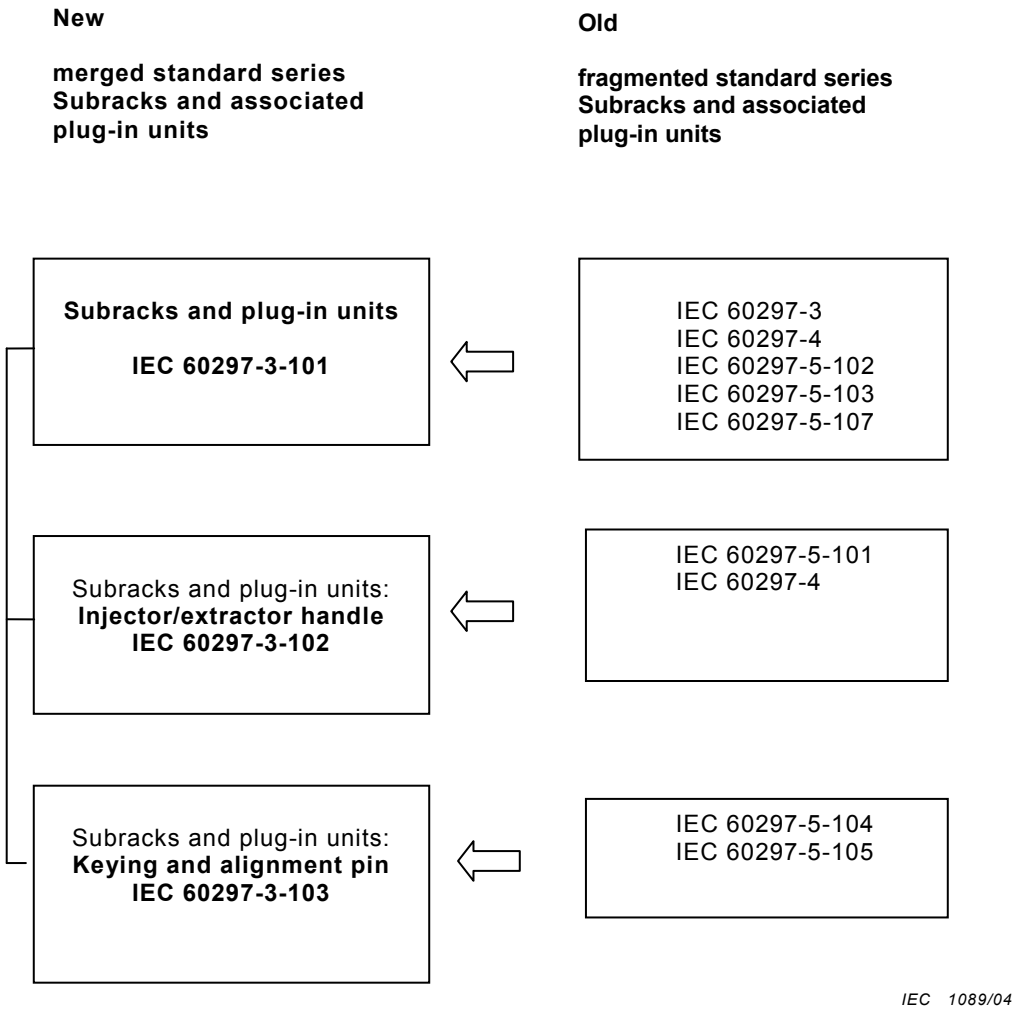

Figure 1 – Relationship between the new IEC 60297-3 series and the old IEC 60297 series

AVA Documents
Document Sharing Hub
Full document details: IEC 60297-3-101 2004

MECHANICAL STRUCTURES FOR ELECTRONIC EQUIPMENT – DIMENSIONS OF MECHANICAL STRUCTURES OF THE 482,6 mm (19 in) SERIES –

Part 3-101: Subracks and associated plug-in units

1 Scope and object

This part of IEC 60297 covers the basic dimensional relationship of a modular range of subracks and associated plug-in units in compliance with the IEC 60297 series.

The purpose of this standard is to specify dimensions which will ensure dimensional interchangeability of subracks and associated plug-in units. Connector related dimensions are limited to “inspection dimensions” only.

For mechanical and climatic tests refer to IEC 61587-1.

For electromagnetic shielding performance tests, refer to IEC 61587-3.

2 Normative references

The following referenced documents are indispensable for the application of this document. For dated references, only the edition cited applies. For undated references, the latest edition of the referenced document (including any amendments) applies.

IEC 60249-2-1, *Base materials for printed circuits – Part 2: Specifications. Specification No. 1: Phenolic cellulose paper copper-clad laminated sheet, high electrical quality*

IEC 60297-1:1986, *Dimensions of mechanical structures of the 482,6 mm (19 in) series – Part 1: Panels and racks*

IEC 60297-2:1982, *Dimensions of mechanical structures of the 482,6 mm (19 in) series – Part 2: Cabinets and pitches of rack structures*

IEC 60603-2:1995, *Connectors for frequencies below 3 MHz for use with printed boards – Part 2: Detail specification for two-part connectors with assessed quality, for printed boards, for basic grid of 2,54 mm (0,1 in) with common mounting features*

IEC 60917-1:1998, *Modular order for the development of mechanical structures for electronic equipment practices – Part 1: Generic standard*

IEC 61076-4-101:2001, *Connectors for electronic equipment – Part 4-101: Printed board connectors with assessed quality – Detail specification for two-part connector modules, having a basic grid of 2,0 mm for printed boards and backplanes in accordance with IEC 60917*

IEC 61076-4-113:2002, *Connectors for electronic equipment – Printed board connectors – Part 4-113: Detail specification for two-part connectors having 5 rows with a grid of 2,54 mm for printed boards and backplanes in bus applications*

IEC 61587-1:1999, *Mechanical structures for electronic equipment – Tests for IEC 60917 and IEC 60297 – Part 1: Climatic, mechanical tests and safety aspects for cabinets, racks, subracks and chassis*

AVA Documents
Document Sharing Hub

Full document details: IEC 60297-3-101 2004

IEC 61587-3: *Mechanical structures for electronic equipment – Tests for IEC 60917 and IEC 60297 – Part 3: Electromagnetic shielding performance tests for cabinets, racks and subracks*

3 Terms and definitions

For the purposes of this document, the terms and definitions given in IEC 60917-1 apply.

4 Arrangement overview

The arrangement overview shown in Figure 2 illustrates a typical 6U subrack with subdivisions and rear mounted plug-in units.

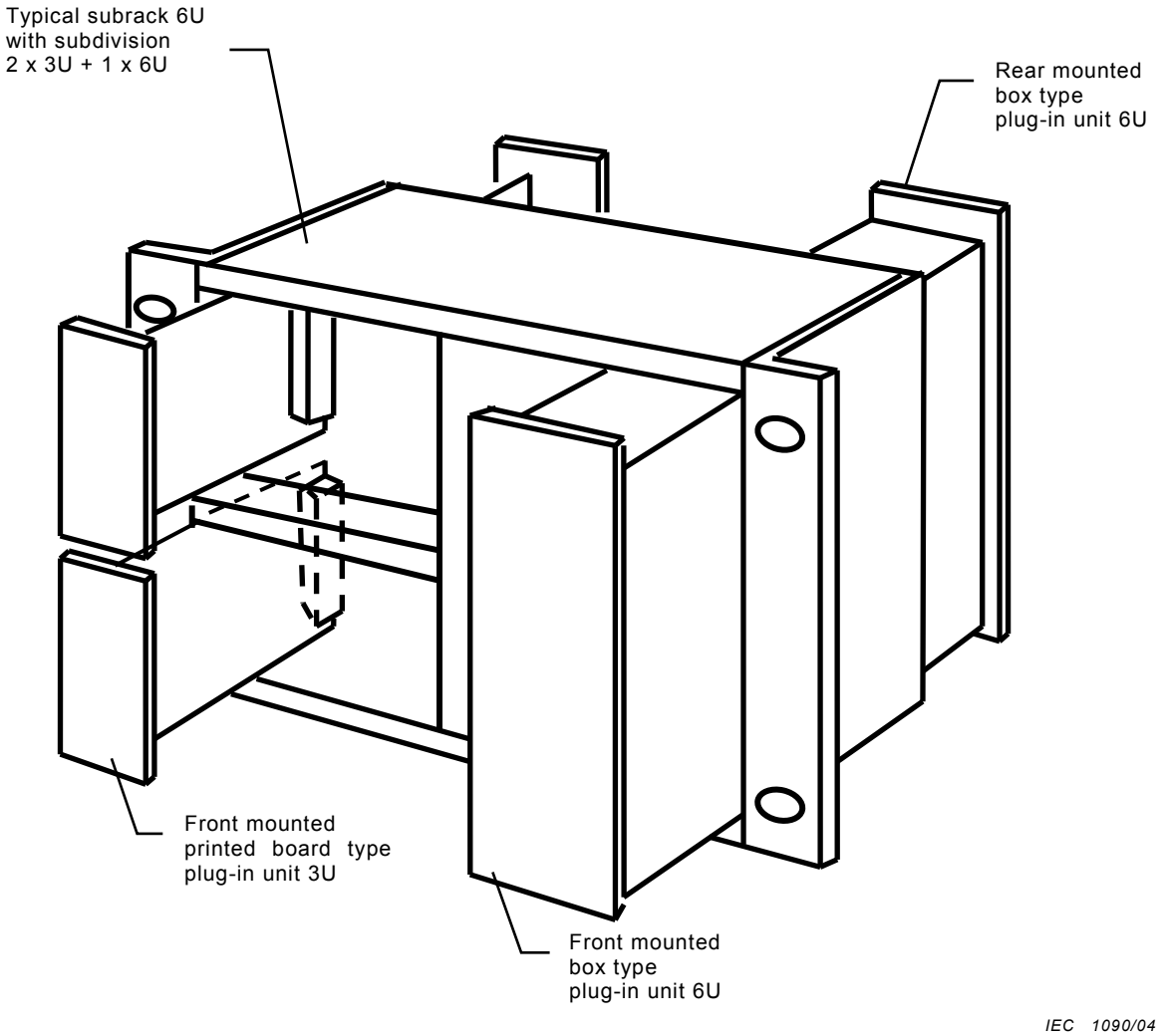

Abbreviation: 1U = 44,45 mm (see Table 3).

Optional features: Subrack and plug-in units electromagnetic shielding provisions (see Clause 10).
Plug-in units electrostatic discharge provisions (see Clause 11).

Figure 2 – Arrangement overview

Documents
Document Sharing Hub
Full document details: IEC 60297-3-101 2004

5 Subrack dimensions, front mounting area

The front mounting area of a subrack defines the aperture dimensions for plug-in units, the guide rail positions, the mounting dimensions to the cabinet and the depth dimensions with the relevant connectors, as shown in Figures 3 to 5.

Dimensions in millimetres

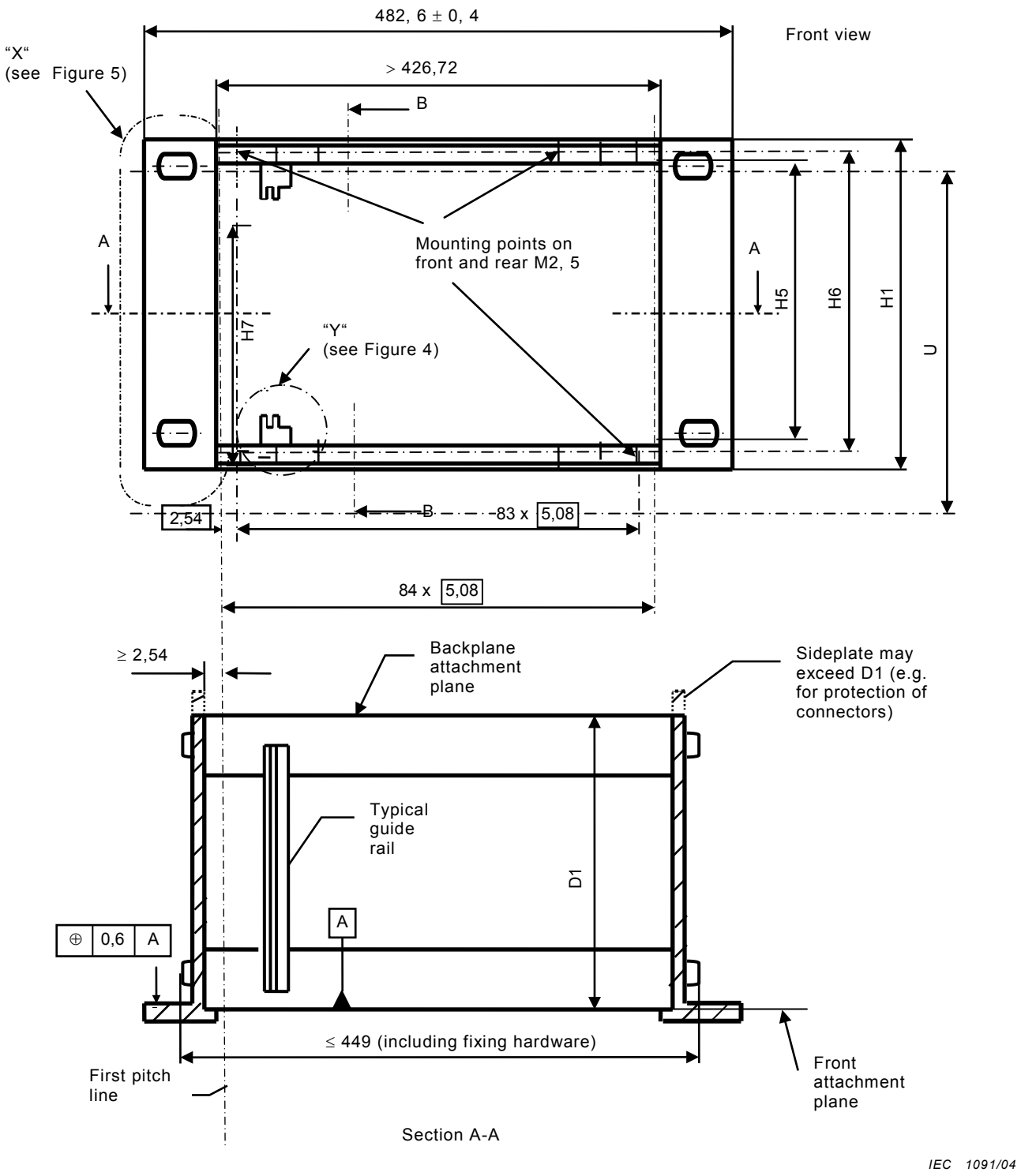

Figure 3 – Subrack dimensions, front mounting area – Part 1

Documents
Document Sharing Hub
Full document details: IEC 60297-3-101 2004

Dimensions in millimetres

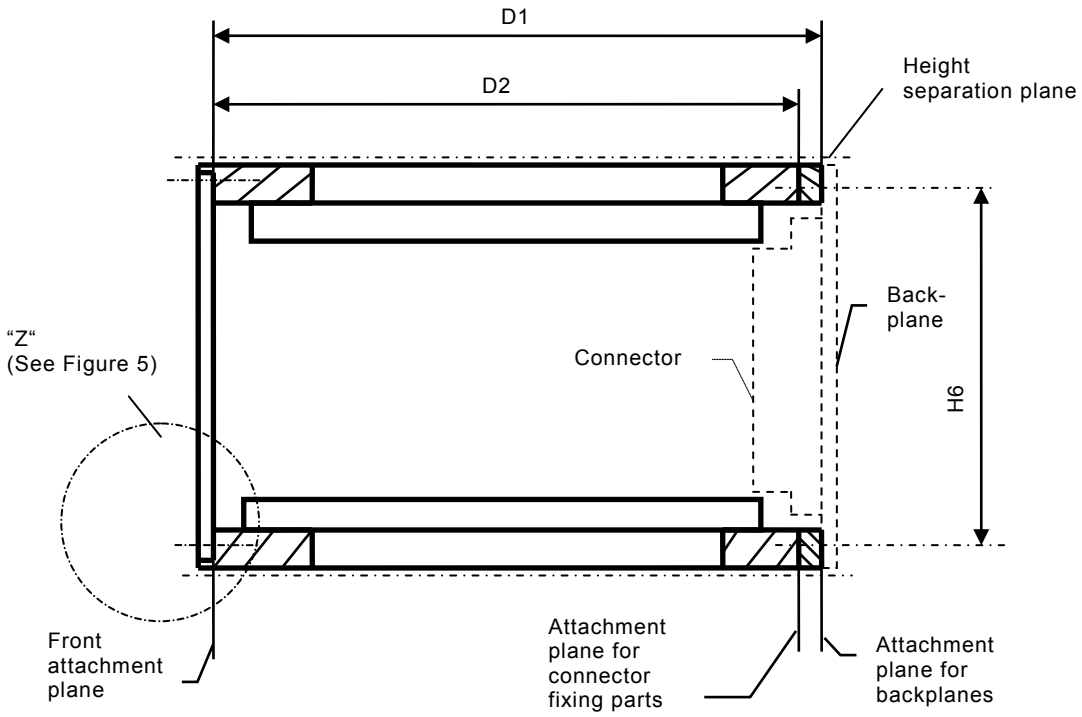

Section B–B of single height subrack (3U)

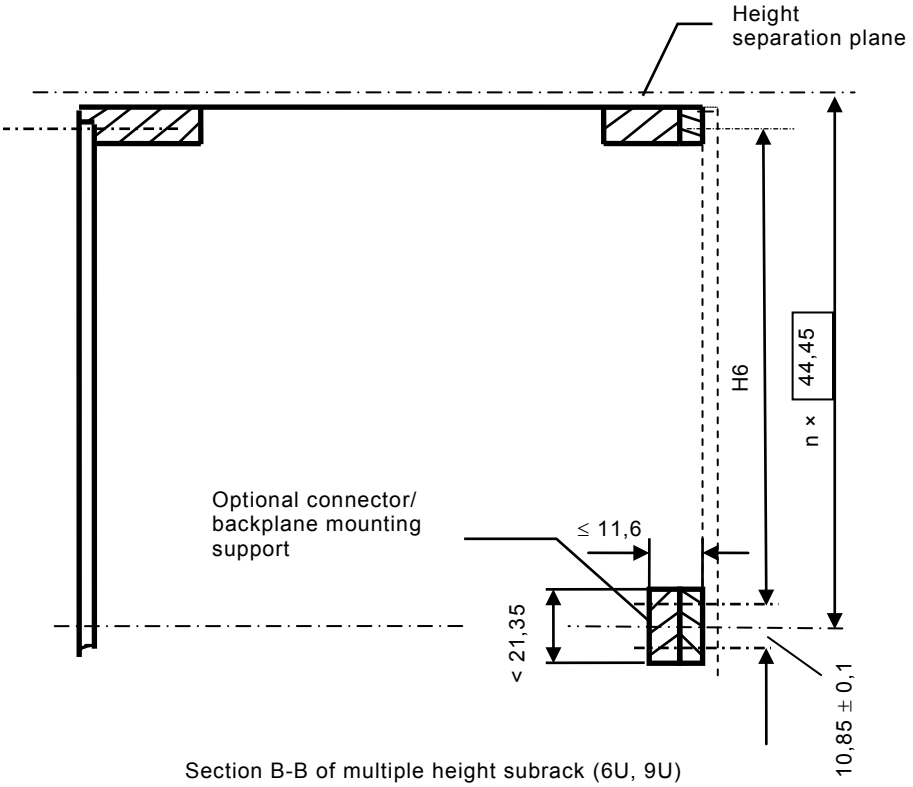

Section B-B of multiple height subrack (6U, 9U)

IEC 1092/04

Figure 4 – Subrack dimensions, front mounting area – Part 2

Documents
Document Sharing Hub
Full document details: IEC 60297-3-101 2004

Dimensions in millimetres

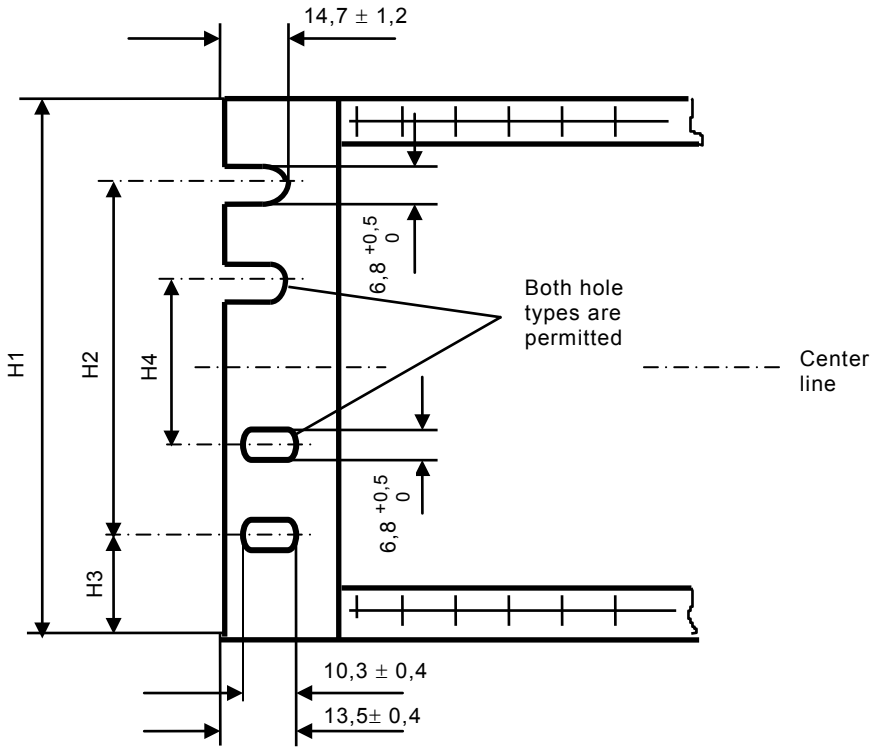

Detail X

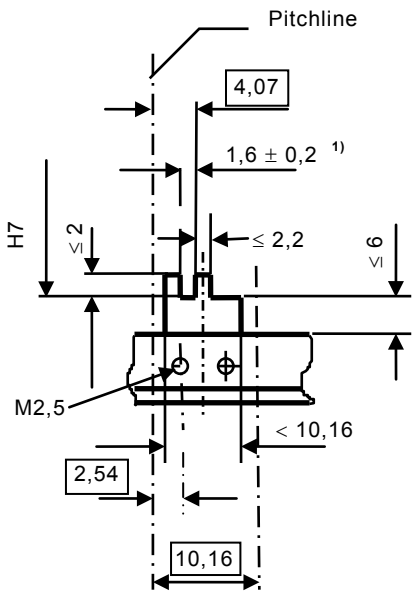

Detail Y

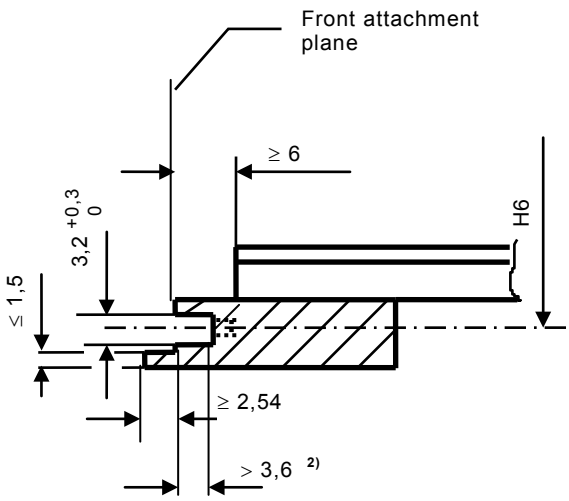

Detail Z

IEC 1093/04

1) For board thickness 1,6 in accordance to IEC 60249-2. The dimension 4,07 is the reference for the position of the right hand side of the printed board. Thicker boards can only expand to the left hand side. The guide rail shall be made of electrically insulating material.

2) See Clause 7, detail “V” for thread dimensions.

Figure 5 – Subrack dimensions, front mounting area – Part 3

Documents
Document Sharing Hub
Full document details: IEC 60297-3-101 2004

6 Subrack dimensions, rear mounting area

The rear mounting area of a subrack defines the aperture dimensions for rear plug-in units, the guide rail positions and the depth dimensions with the relevant connectors (see Table 1 and Figure 6).

Dimensions in millimetres

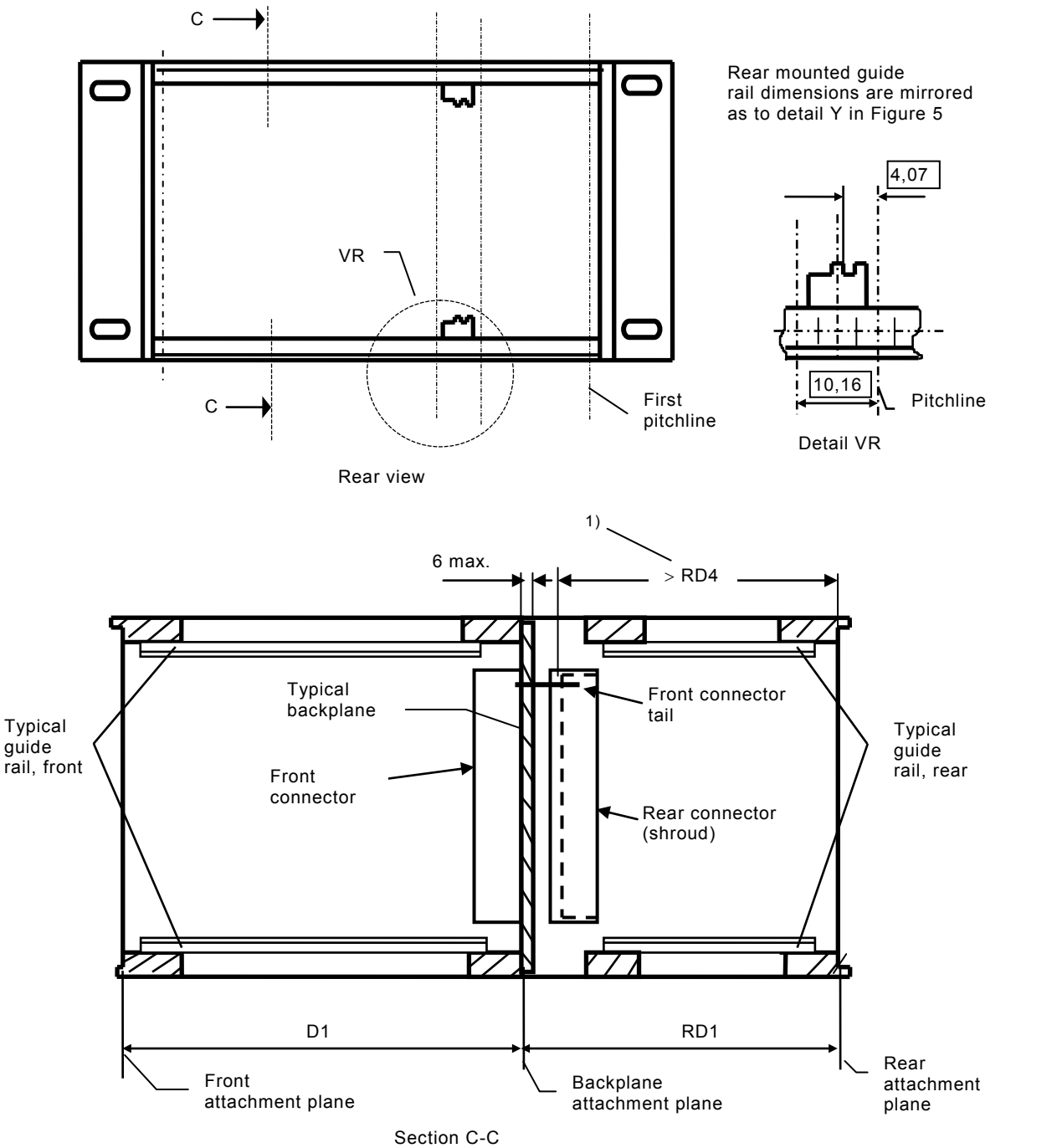

1) RD4: see Clause 9.

Figure 6 – Subrack dimensions, rear mounting area

Documents
Document Sharing Hub
Full document details: IEC 60297-3-101 2004

Table 1 – RD1 dimensions

Dimensions in millimetres

Printed board depth reference (D3)	60	80	100	120	140	160	220	280
Subrack Type A [1)] RD1 ± 0, 25	82,48	102,48	122,48	142,48	162,48	182,48	242,48	302,48
Subrack Type B [2)] RD1 ± 0, 25	80	100	120	140	160	180	240	300
RD1: Depth inspection dimensions using connectors [1)] IEC 60603-2 and 61076-4-113. [2)] IEC 61076-4-101.								

Documents
Document Sharing Hub
Full document details: IEC 60297-3-101 2004

7 Printed board type plug-in units, front mounted

The dimensions of front panels, printed boards and fixing parts will ensure the compatibility of front mounted plug-in units into subracks (see Figures 7 to 9).

Dimensions in millimetres

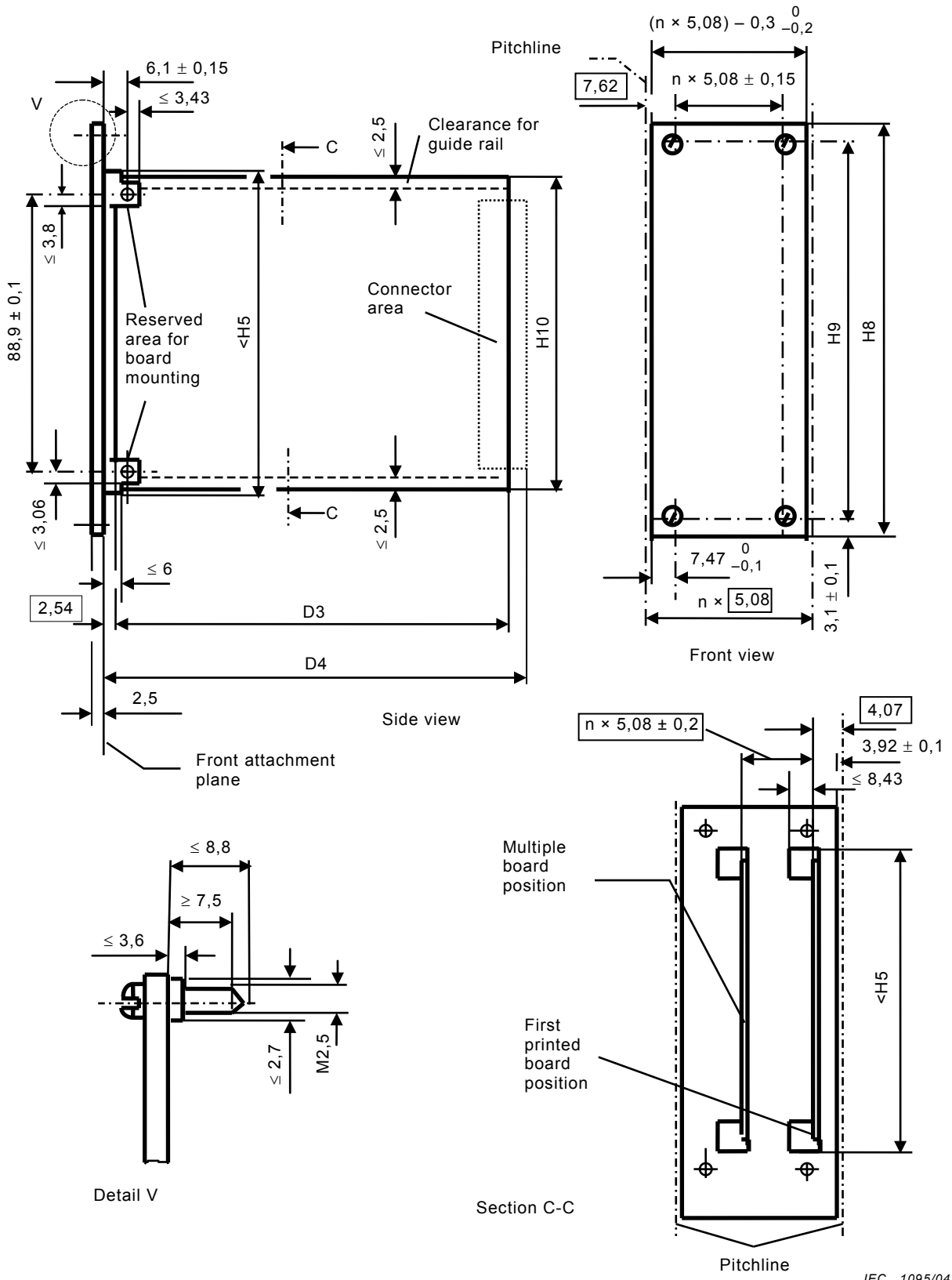

Figure 7 – Printed board type plug-in unit, 3U

IEC 1095/04
Documents
Document Sharing Hub
Full document details: IEC 60297-3-101 2004