IEC 60297-3-105

Edition 1.0 2008-11

INTERNATIONAL STANDARD

NORME INTERNATIONALE

Mechanical structures for electronic equipment – Dimensions of mechanical structures of the 482,6 mm (19 in) series – Part 3-105: Dimensions and design aspects for 1U high chassis

Structures mécaniques pour équipements électroniques – Dimensions des structures mécaniques de la série 482,6 mm (19 pouces) – Partie 3-105: Dimensions et aspects de conception pour les châssis d'une hauteur de 1U

IEC 60297-3-105:2008

Documents
Document Sharing Hub

Full document details: IEC 60297-3-105 2008

THIS PUBLICATION IS COPYRIGHT PROTECTED

Copyright © 2008 IEC, Geneva, Switzerland

All rights reserved. Unless otherwise specified, no part of this publication may be reproduced or utilized in any form or by any means, electronic or mechanical, including photocopying and microfilm, without permission in writing from either IEC or IEC's member National Committee in the country of the requester.
If you have any questions about IEC copyright or have an enquiry about obtaining additional rights to this publication, please contact the address below or your local IEC member National Committee for further information.

Droits de reproduction réservés. Sauf indication contraire, aucune partie de cette publication ne peut être reproduite ni utilisée sous quelque forme que ce soit et par aucun procédé, électronique ou mécanique, y compris la photocopie et les microfilms, sans l'accord écrit de la CEI ou du Comité national de la CEI du pays du demandeur.
Si vous avez des questions sur le copyright de la CEI ou si vous désirez obtenir des droits supplémentaires sur cette publication, utilisez les coordonnées ci-après ou contactez le Comité national de la CEI de votre pays de résidence.

IEC Central Office
3, rue de Varembé
CH-1211 Geneva 20
Switzerland
Email: inmail@iec.ch
Web: www.iec.ch

About the IEC

The International Electrotechnical Commission (IEC) is the leading global organization that prepares and publishes International Standards for all electrical, electronic and related technologies.

About IEC publications

The technical content of IEC publications is kept under constant review by the IEC. Please make sure that you have the latest edition, a corrigenda or an amendment might have been published.

- Catalogue of IEC publications: www.iec.ch/searchpub
The IEC on-line Catalogue enables you to search by a variety of criteria (reference number, text, technical committee,…). It also gives information on projects, withdrawn and replaced publications.
- IEC Just Published: www.iec.ch/online_news/justpub
Stay up to date on all new IEC publications. Just Published details twice a month all new publications released. Available on-line and also by email.
- Electropedia: www.electropedia.org
The world's leading online dictionary of electronic and electrical terms containing more than 20 000 terms and definitions in English and French, with equivalent terms in additional languages. Also known as the International Electrotechnical Vocabulary online.
- Customer Service Centre: www.iec.ch/webstore/custserv
If you wish to give us your feedback on this publication or need further assistance, please visit the Customer Service Centre FAQ or contact us:
Email: csc@iec.ch
Tel.: +41 22 919 02 11
Fax: +41 22 919 03 00

A propos de la CEI

La Commission Electrotechnique Internationale (CEI) est la première organisation mondiale qui élabore et publie des normes internationales pour tout ce qui a trait à l'électricité, à l'électronique et aux technologies apparentées.

A propos des publications CEI

Le contenu technique des publications de la CEI est constamment revu. Veuillez vous assurer que vous possédez l'édition la plus récente, un corrigendum ou amendement peut avoir été publié.

- Catalogue des publications de la CEI: www.iec.ch/searchpub/cur_fut-f.htm
Le Catalogue en-ligne de la CEI vous permet d'effectuer des recherches en utilisant différents critères (numéro de référence, texte, comité d'études,…). Il donne aussi des informations sur les projets et les publications retirées ou remplacées.
- Just Published CEI: www.iec.ch/online_news/justpub
Restez informé sur les nouvelles publications de la CEI. Just Published détaille deux fois par mois les nouvelles publications parues. Disponible en-ligne et aussi par email.
- Electropedia: www.electropedia.org
Le premier dictionnaire en ligne au monde de termes électroniques et électriques. Il contient plus de 20 000 termes et définitions en anglais et en français, ainsi que les termes équivalents dans les langues additionnelles. Egalement appelé Vocabulaire Electrotechnique International en ligne.
- Service Clients: www.iec.ch/webstore/custserv/custserv_entry-f.htm
Si vous désirez nous donner des commentaires sur cette publication ou si vous avez des questions, visitez le FAQ du Service clients ou contactez-nous:
Email: csc@iec.ch
Tél.: +41 22 919 02 11
Fax: +41 22 919 03 00

Documents
Document Sharing Hub

Full document details: IEC 60297-3-105 2008

IEC 60297-3-105

Edition 1.0 2008-11

INTERNATIONAL STANDARD

NORME INTERNATIONALE

Mechanical structures for electronic equipment – Dimensions of mechanical structures of the 482,6 mm (19 in) series – Part 3-105: Dimensions and design aspects for 1U high chassis

Structures mécaniques pour équipements électroniques – Dimensions des structures mécaniques de la série 482,6 mm (19 pouces) – Partie 3-105: Dimensions et aspects de conception pour les châssis d'une hauteur de 1U

INTERNATIONAL
ELECTROTECHNICAL
COMMISSION

COMMISSION
ELECTROTECHNIQUE
INTERNATIONALE

PRICE CODE
CODE PRIX Q

ICS 31.240

ISBN 978-2-88910-096-5

® Registered trademark of the International Electrotechnical Commission
Marque déposée de la Commission Electrotechnique Internationale

Documents
Document Sharing Hub

Full document details: IEC 60297-3-105 2008

CONTENTS

FOREWORD ... 3
INTRODUCTION ... 5
1 Scope ... 6
2 Normative references ... 6
3 Terms and definitions ... 6
4 Arrangement overview ... 7
5 Dimensions of the 1U chassis ... 9
5.1 Chassis type A ... 9
5.2 Chassis type B ... 10
5.3 Chassis type C ... 11
6 Climatic, mechanical tests (safety aspects, EMC, seismic) ... 12
Annex A (informative) Chassis and rack/cabinet relationship ... 13
Annex B (informative) Cooling air flow ... 15
Annex C (informative) Chassis depth relationship to the rack/cabinet ... 16

Figure 1 – Chassis type A ... 8
Figure 2 – Chassis type B ... 8
Figure 3 – Chassis type C ... 8
Figure 4 – Dimensions of chassis type A ... 9
Figure 5 – Dimensions of chassis type B ... 10
Figure 6 – Dimensions of chassis type C ... 11
Figure A.1 – Chassis type B and rack/cabinet relationship ... 13
Figure A.2 – Chassis type C rack/cabinet relationship ... 14
Figure B.1 – Cooling airflow direction ... 15

Table C.1 – Maximum depth *D* in relation to corresponding cabinet depth ... 16

Documents
Document Sharing Hub

Full document details: IEC 60297-3-105 2008

INTERNATIONAL ELECTROTECHNICAL COMMISSION

MECHANICAL STRUCTURES FOR ELECTRONIC EQUIPMENT – DIMENSIONS OF MECHANICAL STRUCTURES OF THE 482,6 mm (19 in) SERIES –

Part 3-105: Dimensions and design aspects for 1U high chassis

FOREWORD

1) The International Electrotechnical Commission (IEC) is a worldwide organization for standardization comprising all national electrotechnical committees (IEC National Committees). The object of IEC is to promote international co-operation on all questions concerning standardization in the electrical and electronic fields. To this end and in addition to other activities, IEC publishes International Standards, Technical Specifications, Technical Reports, Publicly Available Specifications (PAS) and Guides (hereafter referred to as "IEC Publication(s)"). Their preparation is entrusted to technical committees; any IEC National Committee interested in the subject dealt with may participate in this preparatory work. International, governmental and non-governmental organizations liaising with the IEC also participate in this preparation. IEC collaborates closely with the International Organization for Standardization (ISO) in accordance with conditions determined by agreement between the two organizations.
2) The formal decisions or agreements of IEC on technical matters express, as nearly as possible, an international consensus of opinion on the relevant subjects since each technical committee has representation from all interested IEC National Committees.
3) IEC Publications have the form of recommendations for international use and are accepted by IEC National Committees in that sense. While all reasonable efforts are made to ensure that the technical content of IEC Publications is accurate, IEC cannot be held responsible for the way in which they are used or for any misinterpretation by any end user.
4) In order to promote international uniformity, IEC National Committees undertake to apply IEC Publications transparently to the maximum extent possible in their national and regional publications. Any divergence between any IEC Publication and the corresponding national or regional publication shall be clearly indicated in the latter.
5) IEC provides no marking procedure to indicate its approval and cannot be rendered responsible for any equipment declared to be in conformity with an IEC Publication.
6) All users should ensure that they have the latest edition of this publication.
7) No liability shall attach to IEC or its directors, employees, servants or agents including individual experts and members of its technical committees and IEC National Committees for any personal injury, property damage or other damage of any nature whatsoever, whether direct or indirect, or for costs (including legal fees) and expenses arising out of the publication, use of, or reliance upon, this IEC Publication or any other IEC Publications.
8) Attention is drawn to the Normative references cited in this publication. Use of the referenced publications is indispensable for the correct application of this publication.
9) Attention is drawn to the possibility that some of the elements of this IEC Publication may be the subject of patent rights. IEC shall not be held responsible for identifying any or all such patent rights.

International Standard IEC 60297-3-105 has been prepared by subcommittee 48D: Mechanical structures for electronic equipment, of IEC technical committee 48: Electromechanical components and mechanical structures for electronic equipment.

The text of this standard is based on the following documents:

FDIS	Report on voting
48D/381/FDIS	48D/387/RVD

Full information on the voting for the approval of this standard can be found in the report on voting indicated in the above table.

This publication has been drafted in accordance with the ISO/IEC Directives, Part 2.

Documents
Document Sharing Hub

Full document details: IEC 60297-3-105 2008

A list of all parts of IEC 60297 series, published under the general title *Mechanical structures for electronic equipment – Dimensions of mechanical structures of the 482,6 mm (19 in) series,* can be found on the IEC website.

The committee has decided that the contents of this publication will remain unchanged until the maintenance result date indicated on the IEC web site under "http://webstore.iec.ch" in the data related to the specific publication. At this date, the publication will be

- reconfirmed,
- withdrawn,
- replaced by a revised edition, or
- amended.

Documents
Document Sharing Hub

Full document details: IEC 60297-3-105 2008

INTRODUCTION

Electronic systems based on 1U chassis design have become one of the most important platforms used for servers, industrial electronics, information technology (IT) and telecommunication equipment. 1U chassis are sometimes referred to as “Pizza Boxes”.

Applications for 1U chassis designs are wide spread and solutions are found in every segment of the electronics industry.

IEC 60297-3-100 defines the dimensional rack/cabinet details such as the available aperture and the front panel mounting dimensions. However, IEC 60297-3-100 falls short of providing guidance or dimensional requirements for assembling 1U chassis designs into these IEC 60297 conforming racks/cabinets either in singles or in multiples (stacked in $n \times$ 1U).

This part of IEC 60297 will give guidance and provide for dimensional requirements for 1U chassis based on weight loading, physical size and service accessibility.

In this standard, various chassis types are identified according to application needs.

The defined interface dimensions of the various chassis types permit the development of common mounting accessories. Due to this clarification and the application specific chassis type choice, the serviceability and airflow aspects of the chosen 1U chassis can be addressed by the designer.

Similar attributes for multiple unit high equipment may be derived from this standard. The economical value of this standard lies in the predefined interface dimensions of chassis for which suitable accessories may be developed. In addition, as a consequence of the chosen mounting support, the cooling possibilities are indicated.

Documents
Document Sharing Hub

Full document details: IEC 60297-3-105 2008

MECHANICAL STRUCTURES FOR ELECTRONIC EQUIPMENT – DIMENSIONS OF MECHANICAL STRUCTURES OF THE 482,6 mm (19 in) SERIES –

Part 3-105: Dimensions and design aspects for 1U high chassis

1 Scope

This part of IEC 60297 specifies the dimensions for 1U chassis mounted into IEC 60297-3-100 compliant racks/cabinets where dimensions, loaded weight and accessibility require differing assembly methods.

Guidance for cooling and reference for EMC, seismic and for the climatic and mechanical requirements and tests are provided, as defined in the IEC 61587 series.

The drawings used in this standard are not intended to indicate product design, only the specific dimensions shall be used.

The terminology used complies with IEC 60917-1.

2 Normative references

The following referenced documents are indispensable for the application of this document. For dated references, only the edition cited applies. For undated references, the latest edition of the referenced document (including any amendments) applies.

IEC 60050-581, *International electrotechnical vocabulary – Part 581: Electromechanical components for electronic equipment*

IEC 60917-1, *Modular order for the development of mechanical structures for electronic equipment practices – Part 1: Generic standard*

IEC 60297-3-100, *Mechanical structures for electronic equipment – Dimensions of mechanical structures of the 482,6 mm (19 in) series – Part 3-100: Basic dimensions of front panels, subracks, chassis, racks and cabinets*

IEC 61587-1, *Mechanical structures for electronic equipment – Tests for IEC 60917 and IEC 60297 – Part 1: Climatic, mechanical tests and safety aspects for cabinets, racks, subracks and chassis*

IEC 61587-2, *Mechanical structures for electronic equipment – Tests for IEC 60917 and IEC 60297 – Part 2: Seismic tests for cabinets and racks*

IEC 61587-3, *Mechanical structures for electronic equipment – Tests for IEC 60917 and IEC 60297 – Part 3: Electromagnetic shielding performance tests for cabinets, racks and subracks*

3 Terms and definitions

For the purposes of this document, the terms and definitions of IEC 60917-1 and IEC 60050-581 apply, as well as the following.

AVA Documents
Document Sharing Hub

Full document details: IEC 60297-3-105 2008

3.1
19 in cabinet
cabinet in accordance with IEC 60297-3-100

3.2
19 in vertical members
parts of a cabinet with the mounting holes for front panels, chassis and subracks

3.3
chassis slides
angled parts mounted in the cabinet to support heavy or deep chassis (see also IEC 60917-1)

3.4
telescopic slide
extendable mounting support for heavy or deep chassis within a cabinet, providing easy access to rear parts in extended position of the chassis

3.5
aperture of a cabinet
horizontal opening dimension between two 19 in uprights

3.6
height pitch line
theoretical line between any increment of U (1U = 44,45 mm)

3.7
cable management
cable routing within a cabinet to the equipment

3.8
chassis mounting flanges
may be an integrated part of the chassis or separate brackets attached to the chassis

3.9
cable pull factor
summary of cable weight, linked to the chassis

4 Arrangement overview

The arrangement overview in Figure 1 illustrates the chassis mounting methods into a typical 19 in cabinet.

The 1U chassis dimensions differ pending on the choice of the chassis type and resulting mounting dimensions. There are three types of chassis, determined by the principal methods of mounting into a cabinet. The definitions of the three types of chassis are:

- **Chassis type A**: This type of chassis is mounted into racks/cabinets without chassis supports (light weight, shallow equipment with low cable pull factor, IEC 61587-1 DL 1 shock/vibration environment). For the assembly into cabinets only, the chassis mounting flanges are bolted to the 19 in uprights. This type of chassis provides the maximum use of the available width and heights within a 1U section. See Figure 1.

- **Chassis type B**: This type of chassis is designated for equipment with higher load (high rear cabling pull factor, IEC 61587-1 DL 1 shock/vibration environment). Therefore, chassis slides shall be used. The chassis design shall provide recessed areas as a space for the cabinet mounted chassis slides. See Figure 2.

Documents
Document Sharing Hub
Full document details: IEC 60297-3-105 2008

- **Chassis type C**: This type of chassis is designated for extendable equipment mounted on telescopic slides (top cover and/or rear I/O access via rear cable management, IEC 61587-1 DL 1 environment). Telescopic slides may be of two or three parts, dependent on the extension requirement. The chassis design shall provide on both sides recessed areas dependent on the required space for the telescopic slides.

NOTE There is no standard for telescopic slides, mounting dimensions should be defined by the equipment design. See Figure 3.

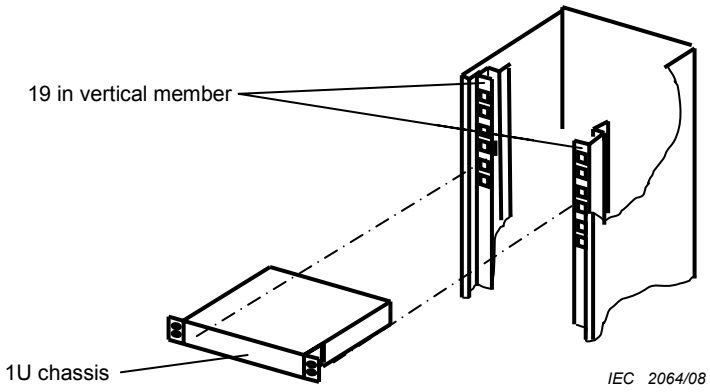

Figure 1 – Chassis type A

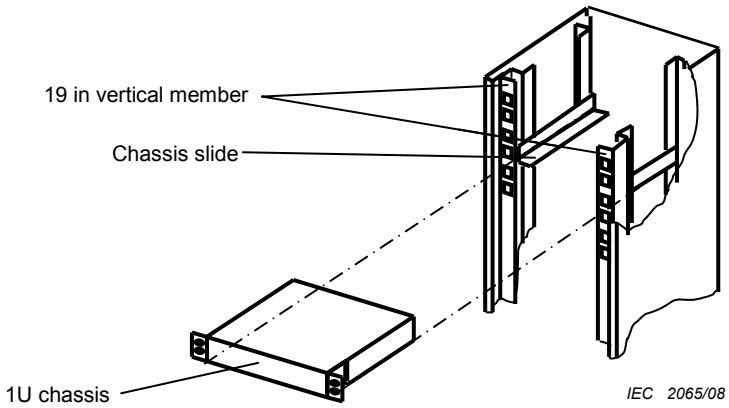

Figure 2 – Chassis type B

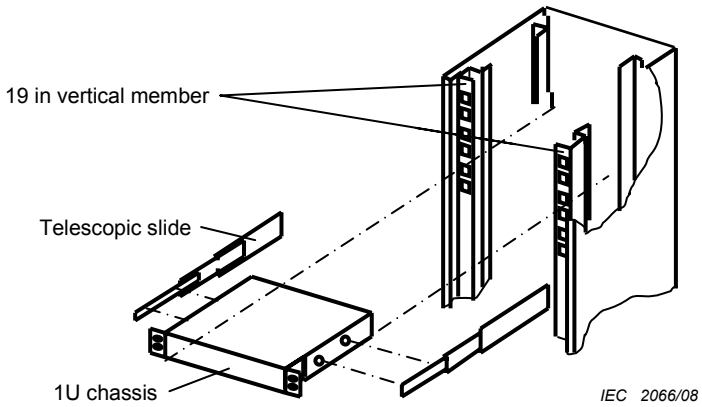

Figure 3 – Chassis type C

Documents
Document Sharing Hub
Full document details: IEC 60297-3-105 2008

5 Dimensions of the 1U chassis

IEC 60297-3-100 defines the front panel dimensions and the aperture of the rack/cabinet.

5.1 Chassis type A

This type of chassis is typically of either light weight, limited depth and/or has a very low cable pull factor. Therefore, the centre of gravity is relatively close to the chassis front panel where the chassis mounting screws to the rack/cabinet uprights are located. Figure 4 illustrates the recommended chassis dimensions utilizing the maximum available cabinet aperture dimension for a 1U chassis. The maximum cable pull factor is to be considered in addition to the maximum weight. The mounted chassis vertical deflection shall not pass over the theoretical rack/cabinet height pitch line.

The maximum width as shown in Figure 4 includes any attached mounting flanges as well as mounting screws.

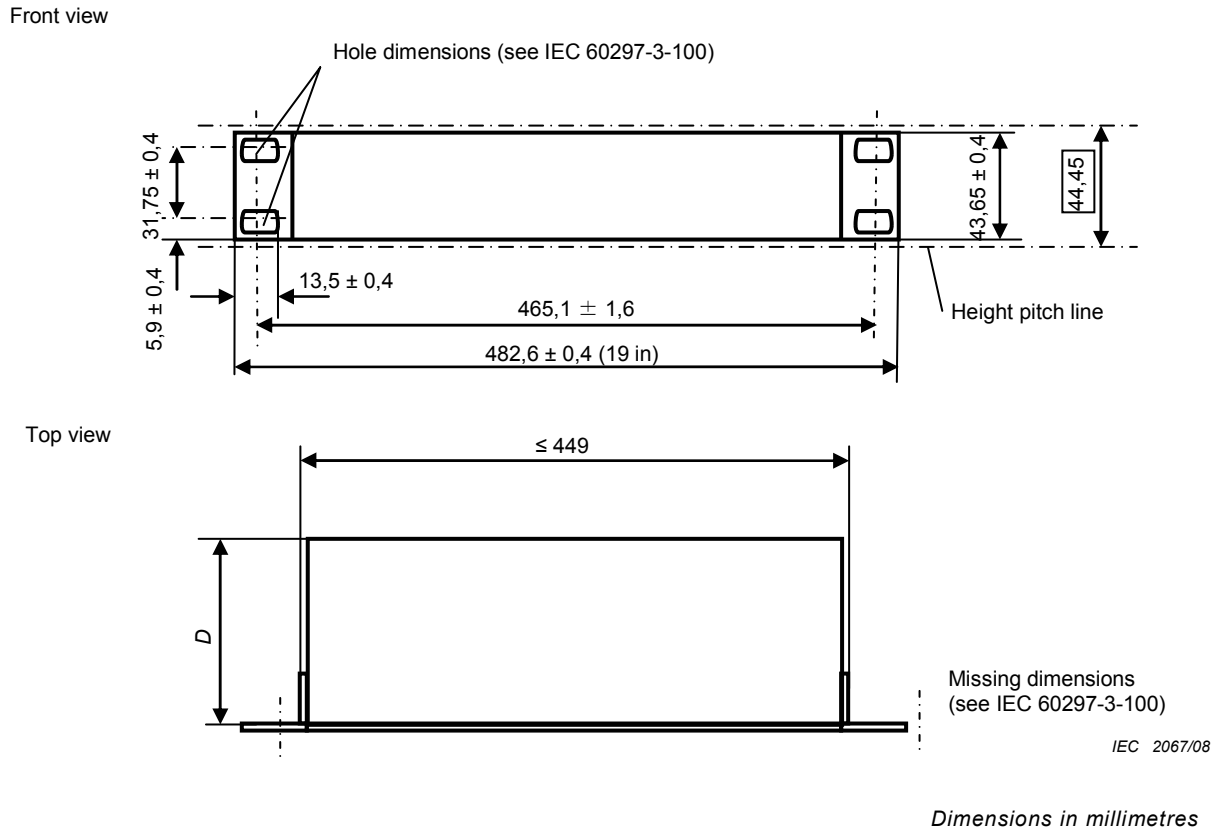

Figure 4 – Dimensions of chassis type A

Documents
Document Sharing Hub
Full document details: IEC 60297-3-105 2008

5.2 Chassis type B

For the type B chassis as shown in Figure 5 the chassis height dimension shall be reduced in order to provide for chassis support space. For the purposes of this standard, the chassis height is reduced by 2 mm at the bottom of the chassis height. This provides for an interference free modular mounting approach of multiple and/or different chassis or subracks in a rack/cabinet.

Where maximum available chassis height is required, only the chassis to mounting support interfaces have to be observed.

For safety reasons and for the load bearing calculation of the chassis slides, the total weight shall not exceed 25 kg.

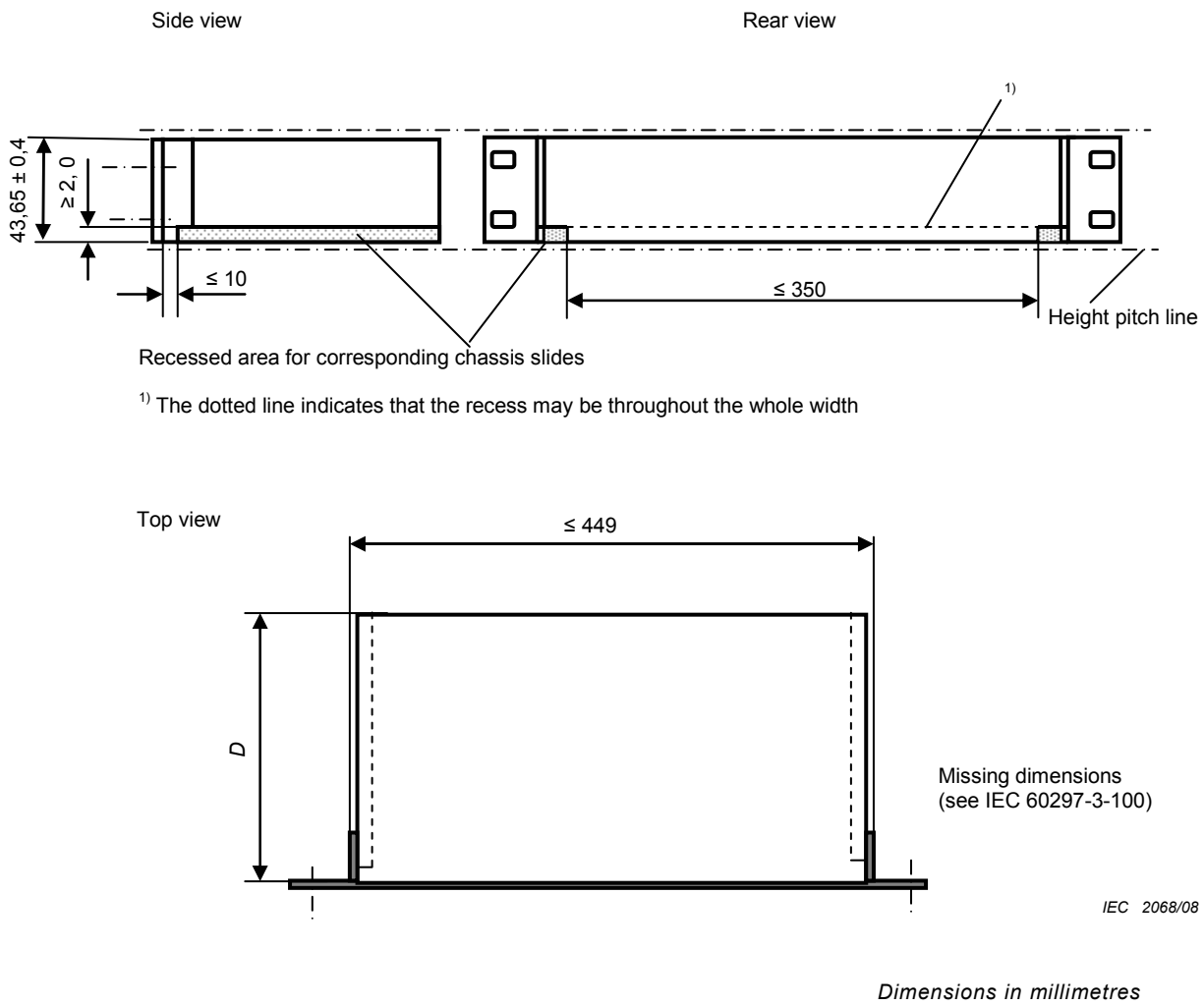

Figure 5 – Dimensions of chassis type B

Documents
Document Sharing Hub
Full document details: IEC 60297-3-105 2008