IEC 60297-3-109

Edition 1.0 2015-11

INTERNATIONAL STANDARD

NORME INTERNATIONALE

Mechanical structures for electrical and electronic equipment – Dimensions of mechanical structures of the 482,6 mm (19 in) series – Part 3-109: Dimensions of chassis for embedded computing devices

Structures mécaniques pour équipements électriques et électroniques – Dimensions des structures mécaniques de la série 482,6 mm (19 pouces) – Partie 3-109: Dimensions des châssis pour dispositifs informatiques intégrés

IEC 60297-3-109:2015-11(en-fr)

Documents
Document Sharing Hub

Full document details: IEC 60297-3-109 2015

THIS PUBLICATION IS COPYRIGHT PROTECTED

Copyright © 2015 IEC, Geneva, Switzerland

All rights reserved. Unless otherwise specified, no part of this publication may be reproduced or utilized in any form or by any means, electronic or mechanical, including photocopying and microfilm, without permission in writing from either IEC or IEC's member National Committee in the country of the requester. If you have any questions about IEC copyright or have an enquiry about obtaining additional rights to this publication, please contact the address below or your local IEC member National Committee for further information.

Droits de reproduction réservés. Sauf indication contraire, aucune partie de cette publication ne peut être reproduite ni utilisée sous quelque forme que ce soit et par aucun procédé, électronique ou mécanique, y compris la photocopie et les microfilms, sans l'accord écrit de l'IEC ou du Comité national de l'IEC du pays du demandeur. Si vous avez des questions sur le copyright de l'IEC ou si vous désirez obtenir des droits supplémentaires sur cette publication, utilisez les coordonnées ci-après ou contactez le Comité national de l'IEC de votre pays de résidence.

IEC Central Office
3, rue de Varembé
CH-1211 Geneva 20
Switzerland

Tel.: +41 22 919 02 11
Fax: +41 22 919 03 00
info@iec.ch
www.iec.ch

About the IEC
The International Electrotechnical Commission (IEC) is the leading global organization that prepares and publishes International Standards for all electrical, electronic and related technologies.

About IEC publications
The technical content of IEC publications is kept under constant review by the IEC. Please make sure that you have the latest edition, a corrigenda or an amendment might have been published.

IEC Catalogue - webstore.iec.ch/catalogue
The stand-alone application for consulting the entire bibliographical information on IEC International Standards, Technical Specifications, Technical Reports and other documents. Available for PC, Mac OS, Android Tablets and iPad.

IEC publications search - www.iec.ch/searchpub
The advanced search enables to find IEC publications by a variety of criteria (reference number, text, technical committee,…). It also gives information on projects, replaced and withdrawn publications.

IEC Just Published - webstore.iec.ch/justpublished
Stay up to date on all new IEC publications. Just Published details all new publications released. Available online and also once a month by email.

Electropedia - www.electropedia.org
The world's leading online dictionary of electronic and electrical terms containing more than 30 000 terms and definitions in English and French, with equivalent terms in 15 additional languages. Also known as the International Electrotechnical Vocabulary (IEV) online.

IEC Glossary - std.iec.ch/glossary
More than 60 000 electrotechnical terminology entries in English and French extracted from the Terms and Definitions clause of IEC publications issued since 2002. Some entries have been collected from earlier publications of IEC TC 37, 77, 86 and CISPR.

IEC Customer Service Centre - webstore.iec.ch/csc
If you wish to give us your feedback on this publication or need further assistance, please contact the Customer Service Centre: csc@iec.ch.

A propos de l'IEC
La Commission Electrotechnique Internationale (IEC) est la première organisation mondiale qui élabore et publie des Normes internationales pour tout ce qui a trait à l'électricité, à l'électronique et aux technologies apparentées.

A propos des publications IEC
Le contenu technique des publications IEC est constamment revu. Veuillez vous assurer que vous possédez l'édition la plus récente, un corrigendum ou amendement peut avoir été publié.

Catalogue IEC - webstore.iec.ch/catalogue
Application autonome pour consulter tous les renseignements bibliographiques sur les Normes internationales, Spécifications techniques, Rapports techniques et autres documents de l'IEC. Disponible pour PC, Mac OS, tablettes Android et iPad.

Recherche de publications IEC - www.iec.ch/searchpub

La recherche avancée permet de trouver des publications IEC en utilisant différents critères (numéro de référence, texte, comité d'études,…). Elle donne aussi des informations sur les projets et les publications remplacées ou retirées.

IEC Just Published - webstore.iec.ch/justpublished

Restez informé sur les nouvelles publications IEC. Just Published détaille les nouvelles publications parues. Disponible en ligne et aussi une fois par mois par email.

Electropedia - www.electropedia.org

Le premier dictionnaire en ligne de termes électroniques et électriques. Il contient plus de 30 000 termes et définitions en anglais et en français, ainsi que les termes équivalents dans 15 langues additionnelles. Egalement appelé Vocabulaire Electrotechnique International (IEV) en ligne.

Glossaire IEC - std.iec.ch/glossary
Plus de 60 000 entrées terminologiques électrotechniques, en anglais et en français, extraites des articles Termes et Définitions des publications IEC parues depuis 2002. Plus certaines entrées antérieures extraites des publications des CE 37, 77, 86 et CISPR de l'IEC.

Service Clients - webstore.iec.ch/csc

Si vous désirez nous donner des commentaires sur cette publication ou si vous avez des questions contactez-nous: csc@iec.ch.

Documents
Document Sharing Hub

Full document details: IEC 60297-3-109 2015

IEC 60297-3-109

Edition 1.0 2015-11

INTERNATIONAL STANDARD

NORME INTERNATIONALE

Mechanical structures for electrical and electronic equipment – Dimensions of mechanical structures of the 482,6 mm (19 in) series – Part 3-109: Dimensions of chassis for embedded computing devices

Structures mécaniques pour équipements électriques et électroniques – Dimensions des structures mécaniques de la série 482,6 mm (19 pouces) – Partie 3-109: Dimensions des châssis pour dispositifs informatiques intégrés

INTERNATIONAL
ELECTROTECHNICAL
COMMISSION

COMMISSION
ELECTROTECHNIQUE
INTERNATIONALE

ICS 31.240

ISBN 978-2-8322-3007-7

Warning! Make sure that you obtained this publication from an authorized distributor.
Attention! Veuillez vous assurer que vous avez obtenu cette publication via un distributeur agréé.

® Registered trademark of the International Electrotechnical Commission
Marque déposée de la Commission Electrotechnique Internationale

AVA Documents
Document Sharing Hub

Full document details: IEC 60297-3-109 2015

CONTENTS

FOREWORD 4
INTRODUCTION 6
1 Scope 7
2 Normative references 7
3 Terms and definitions 7
4 Arrangement overview 7
5 Chassis dimensions 8
Annex A (normative) Printed board dimensions 11
A.1 Illustrative figure 11
A.2 Maximum printed board dimensions 11
Annex B (normative) Printed board dimensions in conjunction with fan cooling 13
B.1 Illustrative figure 13
B.2 Maximum printed board dimensions in conjunction with fan cooling 13
Annex C (normative) Chassis mounting options 16
C.1 Type A: Example for 19” cabinet mounting option 16
C.2 Type B: Example for 19” cabinet mounting option 16
C.3 Type C: Chassis mounting example 17
C.4 Type D: Chassis mounting option 17
Annex D (normative) Environmental tests 19
D.1 Static and dynamic load test 19
D.2 Seismic test 19
D.3 Electromagnetic shielding performance test 19
D.4 Degrees of protection 19
Annex E (informative) Extended chassis dimensions 20
E.1 General 20
E.2 Illustrative figure 20
E.3 Extended chassis dimensions 20

Figure 1 – Three dimensional grid for chassis and associated printed boards 6
Figure 2 – Chassis arrangement of an embedded application 8
Figure 3 – Chassis front dimensions 8
Figure 4 – Chassis depth dimensions 8
Figure A.1 – Chassis with printed board 11
Figure A.2 – Printed board dimensions 11
Figure B.1 – Chassis with fan cooling 13
Figure B.2 – Printed board dimensions in conjunction with fan cooling, example (fan depth = 28,0 mm) 14
Figure C.1 – Type A: Chassis mounting in a 19” cabinet 16
Figure C.2 – Type B: Chassis mounting in a 19” cabinet 17
Figure C.3 – Type C: Vertical flange mounting 17
Figure C.4 – Type D: Horizontal flange mounting 18
Figure E.1 – Extended chassis example 20
Figure E.2 – Extended chassis – front dimensions 20

AVA Documents
Document Sharing Hub
Full document details: IEC 60297-3-109 2015

Figure E.3 – Extended chassis – depth dimensions 21

Table 1 – Chassis height dimensions 9
Table 2 – Chassis width dimensions 9
Table 3 – Chassis depth dimensions 10
Table A.1 – Printed board width dimensions 12
Table A.2 – Printed board depth dimensions 12
Table B.1 – Printed board width dimensions in conjunction with fan cooling, example (fan depth=28,0 mm) 15

Documents
Document Sharing Hub

Full document details: IEC 60297-3-109 2015

INTERNATIONAL ELECTROTECHNICAL COMMISSION

MECHANICAL STRUCTURES FOR ELECTRICAL AND ELECTRONIC EQUIPMENT – DIMENSIONS OF MECHANICAL STRUCTURES OF THE 482,6 mm (19 in) SERIES –

Part 3-109: Dimensions of chassis for embedded computing devices

FOREWORD

1) The International Electrotechnical Commission (IEC) is a worldwide organization for standardization comprising all national electrotechnical committees (IEC National Committees). The object of IEC is to promote international co-operation on all questions concerning standardization in the electrical and electronic fields. To this end and in addition to other activities, IEC publishes International Standards, Technical Specifications, Technical Reports, Publicly Available Specifications (PAS) and Guides (hereafter referred to as "IEC Publication(s)"). Their preparation is entrusted to technical committees; any IEC National Committee interested in the subject dealt with may participate in this preparatory work. International, governmental and non-governmental organizations liaising with the IEC also participate in this preparation. IEC collaborates closely with the International Organization for Standardization (ISO) in accordance with conditions determined by agreement between the two organizations.
2) The formal decisions or agreements of IEC on technical matters express, as nearly as possible, an international consensus of opinion on the relevant subjects since each technical committee has representation from all interested IEC National Committees.
3) IEC Publications have the form of recommendations for international use and are accepted by IEC National Committees in that sense. While all reasonable efforts are made to ensure that the technical content of IEC Publications is accurate, IEC cannot be held responsible for the way in which they are used or for any misinterpretation by any end user.
4) In order to promote international uniformity, IEC National Committees undertake to apply IEC Publications transparently to the maximum extent possible in their national and regional publications. Any divergence between any IEC Publication and the corresponding national or regional publication shall be clearly indicated in the latter.
5) IEC itself does not provide any attestation of conformity. Independent certification bodies provide conformity assessment services and, in some areas, access to IEC marks of conformity. IEC is not responsible for any services carried out by independent certification bodies.
6) All users should ensure that they have the latest edition of this publication.
7) No liability shall attach to IEC or its directors, employees, servants or agents including individual experts and members of its technical committees and IEC National Committees for any personal injury, property damage or other damage of any nature whatsoever, whether direct or indirect, or for costs (including legal fees) and expenses arising out of the publication, use of, or reliance upon, this IEC Publication or any other IEC Publications.
8) Attention is drawn to the Normative references cited in this publication. Use of the referenced publications is indispensable for the correct application of this publication.
9) Attention is drawn to the possibility that some of the elements of this IEC Publication may be the subject of patent rights. IEC shall not be held responsible for identifying any or all such patent rights.

International Standard IEC 60297-3-109 has been prepared by subcommittee 48D: Mechanical structures for electrical and electronic equipment, of IEC technical committee 48: Electrical connectors and mechanical structures for electrical and electronic equipment.

The text of this standard is based on the following documents:

FDIS	Report on voting
48D/598/FDIS	48D/602/RVD

Full information on the voting for the approval of this standard can be found in the report on voting indicated in the above table.

This publication has been drafted in accordance with the ISO/IEC Directives, Part 2.

AVA Documents
Document Sharing Hub

Full document details: IEC 60297-3-109 2015

A list of all parts in the IEC 60297-3 series, published under the general title *Mechanical structures for electrical and electronic equipment – Dimensions of mechanical structures of the 482,6 mm (19 in) series*, can be found on the IEC website.

Future standards in this series will carry the new general title as cited above. Titles of existing standards in this series will be updated at the time of the next edition.

The committee has decided that the contents of this publication will remain unchanged until the stability date indicated on the IEC website under "http://webstore.iec.ch" in the data related to the specific publication. At this date, the publication will be

- reconfirmed,
- withdrawn,
- replaced by a revised edition, or
- amended.

Documents
Document Sharing Hub

Full document details: IEC 60297-3-109 2015

INTRODUCTION

The main applications for embedded computing devices are in machine control, medical, transportation, aerospace and communication environments. For such applications single board computers are typically used.

In order to meet the different environmental conditions and handling requirements, single board computers require for mechanical, thermal and environmental protection by means of appropriate chassis designs. These devices currently reflect a very fragmented situation in the view of any existing mechanical structures dimensional standard. Due to the lack of standardization the individual solutions are realized with proprietary dimensions.

The rapidly growing market for single board computing devices calls for dimensional coordination of chassis and associated printed boards, in order to replace proprietary solutions. This standard will establish a three dimensional grid of 44,45 mm (1,75 in) for chassis and the associated printed boards, which meets best the most frequent dimensional environment of the IEC 60297 series. Once this standard is established, the design and manufacturing of embedded computing solutions will gain significant cost efficiency.

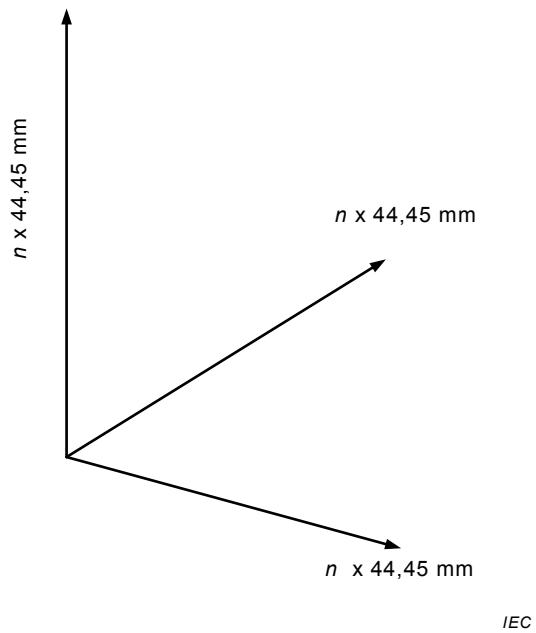

Figure 1 – Three dimensional grid for chassis and associated printed boards

Documents
Document Sharing Hub
Full document details: IEC 60297-3-109 2015

MECHANICAL STRUCTURES FOR ELECTRICAL AND ELECTRONIC EQUIPMENT – DIMENSIONS OF MECHANICAL STRUCTURES OF THE 482,6 mm (19 in) SERIES –

Part 3-109: Dimensions of chassis for embedded computing devices

1 Scope

This part of IEC 60297 specifies dimensions and physical properties of chassis and associated printed boards in order to provide mechanical and environmental integrity for embedded computing devices. They are used in various applications such as machine control, medical, transportation, aerospace and telecommunication, typically based on single board computers.

For the easy definition of the suitable chassis and associated single board dimensions, this standard is based on a structural grid of 44,45 mm (1,75 in).

2 Normative references

The following documents, in whole or in part, are normatively referenced in this document and are indispensable for its application. For dated references, only the edition cited applies. For undated references, the latest edition of the referenced document (including any amendments) applies.

IEC 60297-3-100, *Mechanical structures for electronic equipment – Dimensions of mechanical structures of the 482,6 mm (19 in) series – Part 3-100: Basic dimensions of front panels, subracks, chassis, racks and cabinets*

IEC 60529, *Degrees of protection provided by enclosures (IP Code)*

IEC 61587-1, *Mechanical structures for electronic equipment – Tests for IEC 60917 and IEC 60297 series – Part 1: Environmental requirements, test set-up and safety aspects for cabinets, racks, subracks and chassis under indoor conditions*

IEC 61587-3, *Mechanical structures for electronic equipment – Tests for IEC 60917 and IEC 60297 – Part 3: Electromagnetic shielding performance tests for cabinets and subracks*

IEC 61587-5, *Mechanical structures for electronic equipment – Tests for IEC 60917 and IEC 60297 – Part 5: Seismic tests for chassis, subracks and plug-in units*

3 Terms and definitions

For the purposes of this document, the following terms and definitions apply.

3.1
chassis for embedded computing
mechanical structure designed to support associated electric and electronic components

4 Arrangement overview

Figure 2 illustrates a typical chassis arrangement.

Documents
Document Sharing Hub

Full document details: IEC 60297-3-109 2015

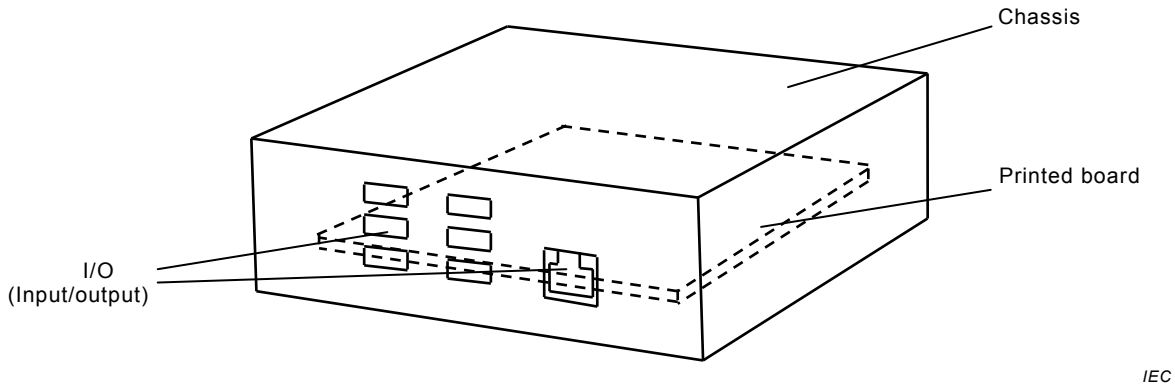

Figure 2 – Chassis arrangement of an embedded application

5 Chassis dimensions

The chassis dimensions are based on a structural grid of 44,45 mm (1,75 in). Figure 3 and Figure 4 illustrate the chassis width, height and depth dimensions. See also Tables 1 to 3.

Dimensions in millimetres

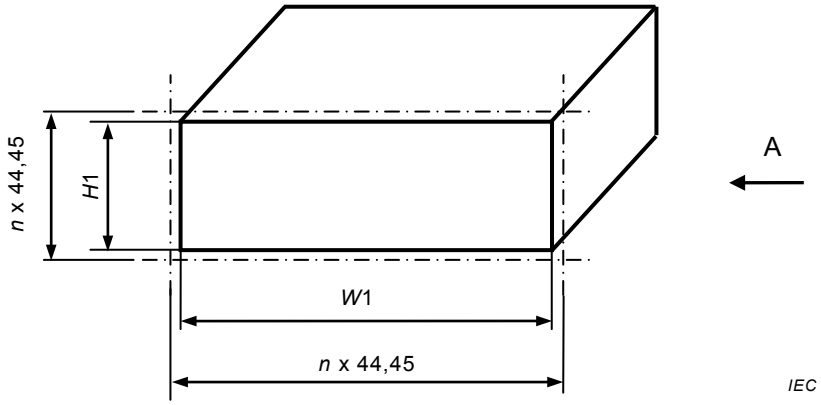

Figure 3 – Chassis front dimensions

Dimensions in millimetres

View A

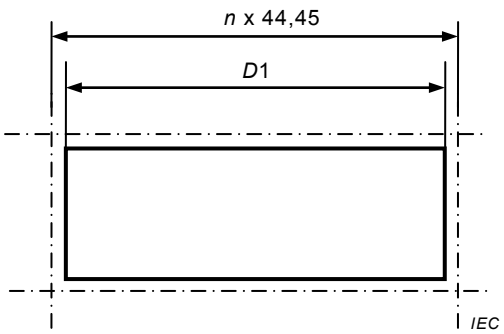

Figure 4 – Chassis depth dimensions

Documents
Document Sharing Hub
Full document details: IEC 60297-3-109 2015

Table 1 – Chassis height dimensions

Height units *n* × U (n × 44,45)	***H1*** ±0,4
1U (44,45)	43,65
2U (88,90)	88,10
3U (133,35)	132,55
4U (177,80)	177,00
5U (222,25)	221,45

Table 2 – Chassis width dimensions

Width units *n* × W (*n* × 44,45)	***W1*** ±0,4
3W (133,35)	132,55
4W (177,80)	177,00
5W (222,25)	221,45
6W (266,70)	265,90
7W (311,15)	310,35
8W (355,60)	354,80
9W (400,05)	399,25
10W (444,50)	443,70

Documents
Document Sharing Hub
Full document details: IEC 60297-3-109 2015

Table 3 – Chassis depth dimensions

Depth units $n \times$ D ($n \times$ 44,45)	***D1*** ±0,4
3D (133,35)	132,55
4D (177,80)	177,00
5D (222,25)	221,45
6D (266,70)	265,90
7D (311,15)	310,35
8D (355,60)	354,80
9D (400,05)	399,25
10D (444,50)	443,70

Documents
Document Sharing Hub
Full document details: IEC 60297-3-109 2015

Annex A
(normative)

Printed board dimensions

A.1 Illustrative figure

Figure A.1 illustrates the chassis with the associated printed board.

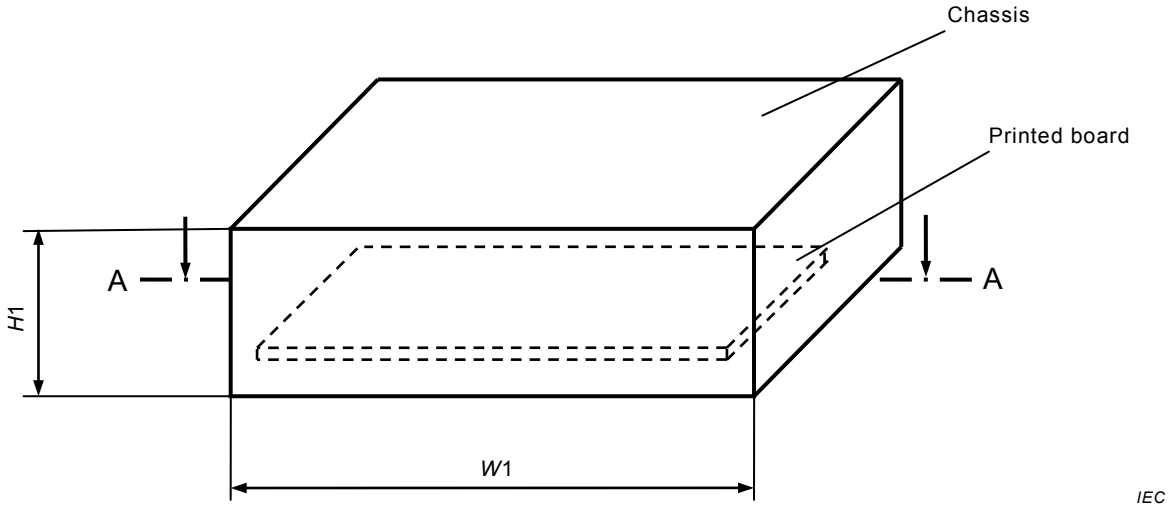

Figure A.1 – Chassis with printed board

A.2 Maximum printed board dimensions

Figure A.2 illustrates the maximum width and depth of printed board dimensions, depending on the defined chassis dimensions. See also Tables A.1 and A.2.

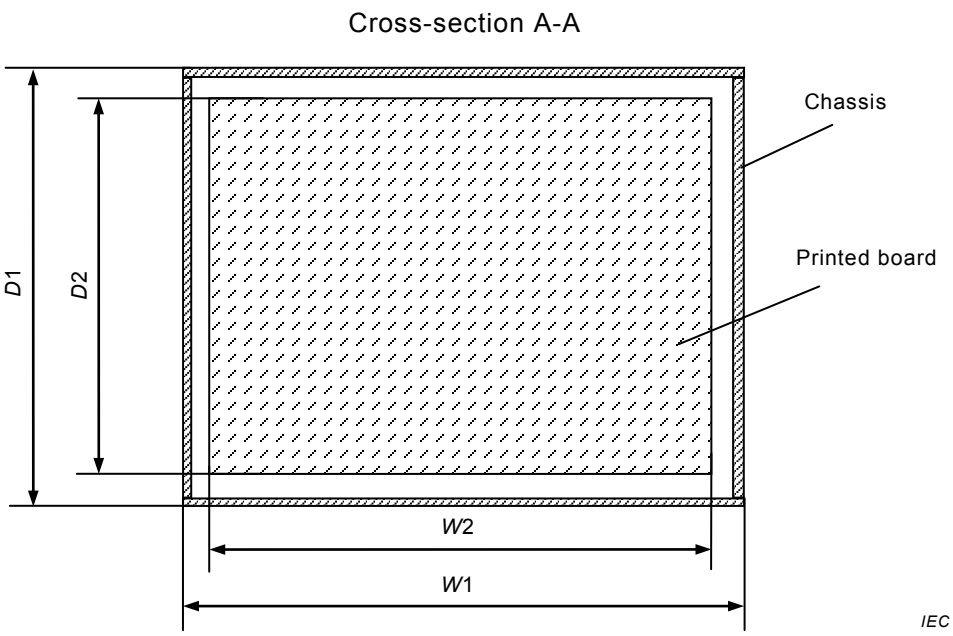

Figure A.2 – Printed board dimensions

Documents
Document Sharing Hub
Full document details: IEC 60297-3-109 2015

Table A.1 – Printed board width dimensions

Width units $n \times$ W ($n \times$ 44,45)	*W2* max.
3W (133,35)	121,44
4W (177,80)	165,89
5W (222,25)	210,34
6W (266,70)	254,79
7W (311,15)	299,24
8W (355,60)	343,69
9W (400,05)	388,14
10W (444,50)	432,59

Table A.2 – Printed board depth dimensions

Depth units $n \times$ D ($n \times$ 44,45)	*D2* max.
3D (133,35)	121,44
4D (177,80)	165,89
5D (222,25)	210,34
6D (266,70)	254,79
7D (311,15)	299,24
8D (355,60)	343,69
9D (400,05)	388,14
10D (444,50)	432,59

Documents
Document Sharing Hub
Full document details: IEC 60297-3-109 2015