IEC 60311-3

Edition 1.0 2018-11

INTERNATIONAL STANDARD

NORME INTERNATIONALE

colour inside

Integrated circuits – Three dimensional integrated circuits – Part 3: Model and measurement conditions of through-silicon via

Circuits intégrés – Circuits intégrés tridimensionnels – Partie 3: Modèle et conditions de mesure des trous de liaison à travers le silicium

IEC 60311-3:2018-11(en-fr)

Documents
Document Sharing Hub

Full document details: IEC 60311-3-2018

THIS PUBLICATION IS COPYRIGHT PROTECTED
Copyright © 2018 IEC, Geneva, Switzerland

All rights reserved. Unless otherwise specified, no part of this publication may be reproduced or utilized in any form or by any means, electronic or mechanical, including photocopying and microfilm, without permission in writing from either IEC or IEC's member National Committee in the country of the requester. If you have any questions about IEC copyright or have an enquiry about obtaining additional rights to this publication, please contact the address below or your local IEC member National Committee for further information.

Droits de reproduction réservés. Sauf indication contraire, aucune partie de cette publication ne peut être reproduite ni utilisée sous quelque forme que ce soit et par aucun procédé, électronique ou mécanique, y compris la photocopie et les microfilms, sans l'accord écrit de l'IEC ou du Comité national de l'IEC du pays du demandeur. Si vous avez des questions sur le copyright de l'IEC ou si vous désirez obtenir des droits supplémentaires sur cette publication, utilisez les coordonnées ci-après ou contactez le Comité national de l'IEC de votre pays de résidence.

IEC Central Office
3, rue de Varembé
CH-1211 Geneva 20
Switzerland

Tel.: +41 22 919 02 11
info@iec.ch
www.iec.ch

About the IEC
The International Electrotechnical Commission (IEC) is the leading global organization that prepares and publishes International Standards for all electrical, electronic and related technologies.

About IEC publications
The technical content of IEC publications is kept under constant review by the IEC. Please make sure that you have the latest edition, a corrigenda or an amendment might have been published.

IEC Catalogue - webstore.iec.ch/catalogue
The stand-alone application for consulting the entire bibliographical information on IEC International Standards, Technical Specifications, Technical Reports and other documents. Available for PC, Mac OS, Android Tablets and iPad.

IEC publications search - webstore.iec.ch/advsearchform
The advanced search enables to find IEC publications by a variety of criteria (reference number, text, technical committee,…). It also gives information on projects, replaced and withdrawn publications.

IEC Just Published - webstore.iec.ch/justpublished
Stay up to date on all new IEC publications. Just Published details all new publications released. Available online and also once a month by email.

Electropedia - www.electropedia.org
The world's leading online dictionary of electronic and electrical terms containing 21 000 terms and definitions in English and French, with equivalent terms in 16 additional languages. Also known as the International Electrotechnical Vocabulary (IEV) online.

IEC Glossary - std.iec.ch/glossary
67 000 electrotechnical terminology entries in English and French extracted from the Terms and Definitions clause of IEC publications issued since 2002. Some entries have been collected from earlier publications of IEC TC 37, 77, 86 and CISPR.

IEC Customer Service Centre - webstore.iec.ch/csc
If you wish to give us your feedback on this publication or need further assistance, please contact the Customer Service Centre: sales@iec.ch.

A propos de l'IEC
La Commission Electrotechnique Internationale (IEC) est la première organisation mondiale qui élabore et publie des Normes internationales pour tout ce qui a trait à l'électricité, à l'électronique et aux technologies apparentées.

A propos des publications IEC
Le contenu technique des publications IEC est constamment revu. Veuillez vous assurer que vous possédez l'édition la plus récente, un corrigendum ou amendement peut avoir été publié.

Catalogue IEC - webstore.iec.ch/catalogue
Application autonome pour consulter tous les renseignements bibliographiques sur les Normes internationales, Spécifications techniques, Rapports techniques et autres documents de l'IEC. Disponible pour PC, Mac OS, tablettes Android et iPad.

Recherche de publications IEC - webstore.iec.ch/advsearchform

La recherche avancée permet de trouver des publications IEC en utilisant différents critères (numéro de référence, texte, comité d'études,…). Elle donne aussi des informations sur les projets et les publications remplacées ou retirées.

IEC Just Published - webstore.iec.ch/justpublished

Restez informé sur les nouvelles publications IEC. Just Published détaille les nouvelles publications parues. Disponible en ligne et aussi une fois par mois par email.

Electropedia - www.electropedia.org

Le premier dictionnaire en ligne de termes électroniques et électriques. Il contient 21 000 termes et définitions en anglais et en français, ainsi que les termes équivalents dans 16 langues additionnelles. Egalement appelé Vocabulaire Electrotechnique International (IEV) en ligne.

Glossaire IEC - std.iec.ch/glossary
67 000 entrées terminologiques électrotechniques, en anglais et en français, extraites des articles Termes et Définitions des publications IEC parues depuis 2002. Plus certaines entrées antérieures extraites des publications des CE 37, 77, 86 et CISPR de l'IEC.

Service Clients - webstore.iec.ch/csc

Si vous désirez nous donner des commentaires sur cette publication ou si vous avez des questions contactez-nous: sales@iec.ch.

Documents
Document Sharing Hub

Full document details: IEC 60311-3-2018

IEC 60311-3

Edition 1.0 2018-11

INTERNATIONAL STANDARD

NORME INTERNATIONALE

colour inside

Integrated circuits – Three dimensional integrated circuits – Part 3: Model and measurement conditions of through-silicon via

Circuits intégrés – Circuits intégrés tridimensionnels – Partie 3: Modèle et conditions de mesure des trous de liaison à travers le silicium

INTERNATIONAL
ELECTROTECHNICAL
COMMISSION

COMMISSION
ELECTROTECHNIQUE
INTERNATIONALE

ICS 31.200

ISBN 978-2-8322-6276-4

Warning! Make sure that you obtained this publication from an authorized distributor.
Attention! Veuillez vous assurer que vous avez obtenu cette publication via un distributeur agréé.

AVA Documents
Document Sharing Hub

® Registered trademark of the International Electrotechnical Commission
Marque déposée de la Commission Electrotechnique Internationale

Full document details: IEC 60311-3-2018

CONTENTS

FOREWORD 3
INTRODUCTION 5
1 Scope 6
2 Normative references 6
3 Terms, definitions and abbreviated terms 7
3.1 Terms and definitions 7
3.2 Abbreviated terms 7
4 Measurement conditions to specify TSV characteristics 7
4.1 Supply chain and TSV circuit model 7
4.2 Reference model of TSV electrical characteristics 8
4.3 Measurement conditions to specify TSV electrical characteristics 9
4.3.1 General 9
4.3.2 Resistance measurement 9
4.3.3 Capacitance measurement 10
Annex A (informative) Explanatory note 12
A.1 Purpose of establishment 12
A.2 Reference dimension of the TSV model 12
A.3 Other considerations for implementation 13
A.3.1 General 13
A.3.2 Keep out zone 13

Figure 1 – Reference of a multi-chip interconnect system 6
Figure 2 – 3-D IC Supply chain model 7
Figure 3 – TSV electrical characteristic model 8
Figure 4 – Resistance measurement method 10
Figure 5 – Capacitance measurement method 10
Figure 6 – Measurement conditions to specify TSV electrical characteristics when substrate is not connected to power supply 11
Figure A.1 – Structure of the TSV model 13
Figure A.2 – KOZ definition 14

Table 1 – Policy for model standardization 9
Table A.1 – Parameters and reference values of the TSV model 12
Table A.2 – Parameters affecting KOZ 14

Documents
Document Sharing Hub
Full document details: IEC 60311-3-2018

INTERNATIONAL ELECTROTECHNICAL COMMISSION

INTEGRATED CIRCUITS – THREE DIMENSIONAL INTEGRATED CIRCUITS –

Part 3: Model and measurement conditions of through-silicon via

FOREWORD

1) The International Electrotechnical Commission (IEC) is a worldwide organization for standardization comprising all national electrotechnical committees (IEC National Committees). The object of IEC is to promote international co-operation on all questions concerning standardization in the electrical and electronic fields. To this end and in addition to other activities, IEC publishes International Standards, Technical Specifications, Technical Reports, Publicly Available Specifications (PAS) and Guides (hereafter referred to as "IEC Publication(s)"). Their preparation is entrusted to technical committees; any IEC National Committee interested in the subject dealt with may participate in this preparatory work. International, governmental and non-governmental organizations liaising with the IEC also participate in this preparation. IEC collaborates closely with the International Organization for Standardization (ISO) in accordance with conditions determined by agreement between the two organizations.
2) The formal decisions or agreements of IEC on technical matters express, as nearly as possible, an international consensus of opinion on the relevant subjects since each technical committee has representation from all interested IEC National Committees.
3) IEC Publications have the form of recommendations for international use and are accepted by IEC National Committees in that sense. While all reasonable efforts are made to ensure that the technical content of IEC Publications is accurate, IEC cannot be held responsible for the way in which they are used or for any misinterpretation by any end user.
4) In order to promote international uniformity, IEC National Committees undertake to apply IEC Publications transparently to the maximum extent possible in their national and regional publications. Any divergence between any IEC Publication and the corresponding national or regional publication shall be clearly indicated in the latter.
5) IEC itself does not provide any attestation of conformity. Independent certification bodies provide conformity assessment services and, in some areas, access to IEC marks of conformity. IEC is not responsible for any services carried out by independent certification bodies.
6) All users should ensure that they have the latest edition of this publication.
7) No liability shall attach to IEC or its directors, employees, servants or agents including individual experts and members of its technical committees and IEC National Committees for any personal injury, property damage or other damage of any nature whatsoever, whether direct or indirect, or for costs (including legal fees) and expenses arising out of the publication, use of, or reliance upon, this IEC Publication or any other IEC Publications.
8) Attention is drawn to the Normative references cited in this publication. Use of the referenced publications is indispensable for the correct application of this publication.
9) Attention is drawn to the possibility that some of the elements of this IEC Publication may be the subject of patent rights. IEC shall not be held responsible for identifying any or all such patent rights.

International Standard IEC 63011-3 has been prepared by subcommittee 47A: Integrated circuits, of IEC technical committee 47: Semiconductor devices.

The text of this International Standard is based on the following documents:

FDIS	Report on voting
47A/1057/FDIS	47A/1063/RVD

Full information on the voting for the approval of this International Standard can be found in the report on voting indicated in the above table.

This document has been drafted in accordance with the ISO/IEC Directives, Part 2.

Documents
Document Sharing Hub

Full document details: IEC 60311-3-2018

A list of all parts in the IEC 63011 series, under the general title *Integrated circuits – Three dimensional integrated circuits*, can be found on the IEC website.

The committee has decided that the contents of this document will remain unchanged until the stability date indicated on the IEC website under "http://webstore.iec.ch" in the data related to the specific document. At this date, the document will be

- reconfirmed,
- withdrawn,
- replaced by a revised edition, or
- amended.

IMPORTANT – The 'colour inside' logo on the cover page of this publication indicates that it contains colours which are considered to be useful for the correct understanding of its contents. Users should therefore print this document using a colour printer.

Documents
Document Sharing Hub

Full document details: IEC 60311-3-2018

INTRODUCTION

The embedded system implementation such as digital consumer and mobile devices is a history of functional integration and power reduction for faster and smaller. At the beginning, the embedded system was developed by various digital ASIC chips to implement required functions. They were then integrated on one chip as a system on chip (SoC), which includes application processor and peripheral I/F logic, such as PCIe, SATA, USB, and DDRx memory controller. Because required performance and image resolution is growing, SoC has embedded many functions through adopting advanced semiconductor technology.

Since advanced semiconductor technology is complicated and its development cost is higher, the application is limited to use only for a few products. Those SoC's cost is not appropriate for all embedded systems. Multi-chip implementation is a way to solve this issue. It implements very large logic gate on the separated SoC and ASIC logic chips, connecting each other. This multi-chip interconnection technique provides also implementation of heterogeneous technology VLSI chips.

This document is focused to interconnect methodology to implement multi-chip VLSI for three-dimensional integrated circuit. Thanks to through-silicon via (TSV) and micro bump interconnect technology; the wire number between VLSI can be tremendously wider. It also allows to connect chips with on-chip bus interconnection, which has several thousand signal connections.

Documents
Document Sharing Hub

Full document details: IEC 60311-3-2018

INTEGRATED CIRCUITS – THREE DIMENSIONAL INTEGRATED CIRCUITS –

Part 3: Model and measurement conditions of through-silicon via

1 Scope

This part of IEC 63011 specifies a reference model of through-silicon via (TSV) electrical characteristics required for an interface design in three dimensional integrated circuit (3-D IC) to transmit and receive digital data and measurement conditions for resistance and capacitance to specify TSV characteristics in 3-D IC.

3-D IC specifications covered by this document are the following:

- application: digital consumer and mobile;
- operating voltage: 0,1 V to 5,0 V,
- operating frequency: less than 2,0 GHz.

This document does not describe the equipment for the measurement. Figure 1 describes a typical case of multi-chip interconnect system discussed in this document.

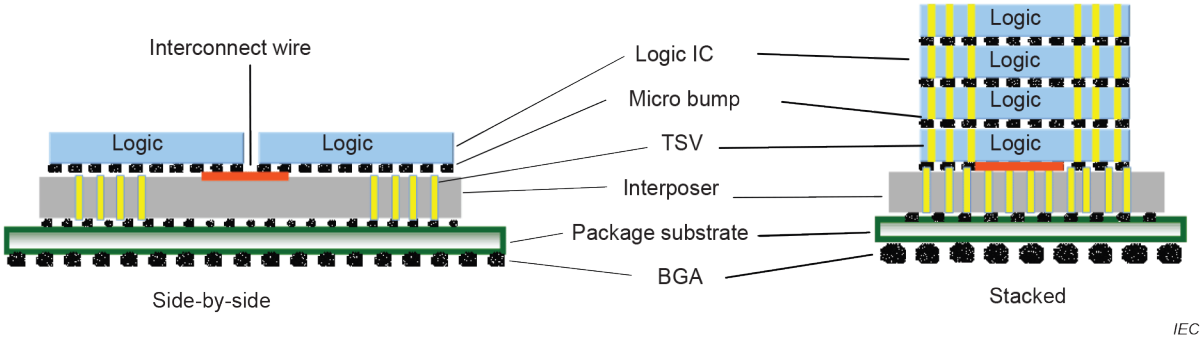

Figure 1 – Reference of a multi-chip interconnect system

Power devices, RF devices and micro-electromechanical systems (MEMS) are not in the scope of this document.

2 Normative references

The following documents are referred to in the text in such a way that some or all of their content constitutes requirements of this document. For dated references, only the edition cited applies. For undated references, the latest edition of the referenced document (including any amendments) applies.

IEC 63011-1, *Integrated circuits – Three dimensional integrated circuits – Part 1: Terminology*

Documents
Document Sharing Hub
Full document details: IEC 60311-3-2018

3 Terms, definitions and abbreviated terms

3.1 Terms and definitions

For the purposes of this document, the terms and definitions given in IEC 63011-1 apply.

ISO and IEC maintain terminological databases for use in standardization at the following addresses:

- IEC Electropedia: available at http://www.electropedia.org/
- ISO Online browsing platform: available at http://www.iso.org/obp

3.2 Abbreviated terms

3-D IC	three-dimensional integrated circuit
ASIC	application specific integrated circuit
NMOS	N-channel MOSFET
PMOS	P-channel MOSFET
SoC	system on chip
TSV	through-silicon via
VLSI	very large scale integration

4 Measurement conditions to specify TSV characteristics

4.1 Supply chain and TSV circuit model

3-D IC supply chain employing the TSV circuit model is shown in Figure 2. Foundry manufacturers of logic chip and 3-D stacking provide the TSV model. The circuit model is determined based on an actual experimental result.

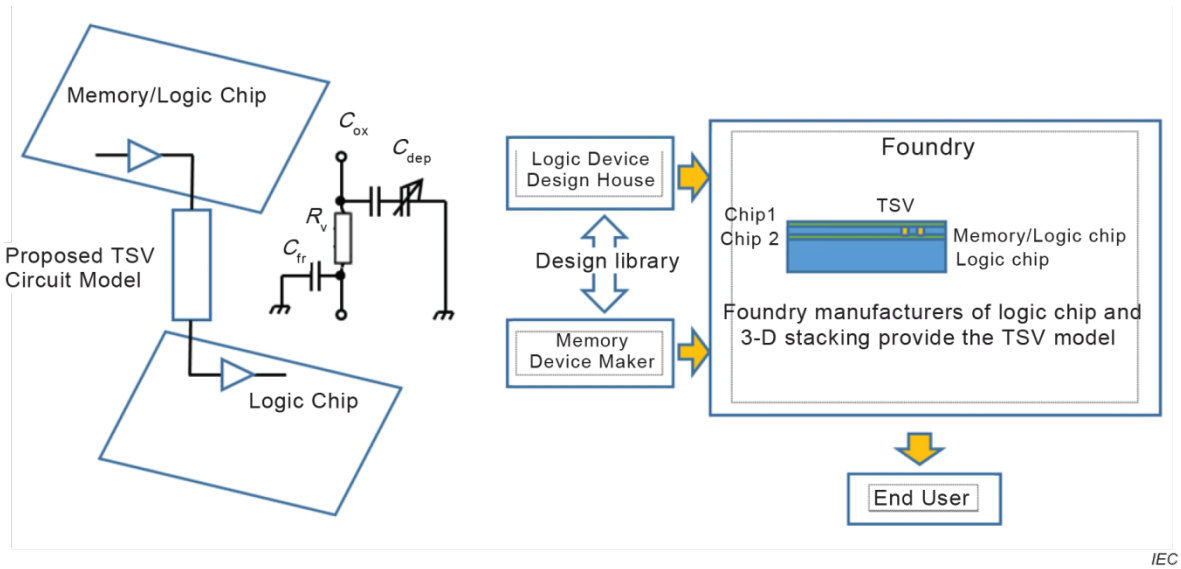

Figure 2 – 3-D IC Supply chain model

Documents
Document Sharing Hub
Full document details: IEC 60311-3-2018

4.2 Reference model of TSV electrical characteristics

Reference model of TSV electrical characteristics shown in Figure 3 is composed of a capacitance (C_v) and a resistance (R_v). C_v is the total capacitance and consists of capacitance of oxide layer (C_{ox}), capacitance by depletion layer (C_{dep}) and fringe capacitance (C_{fr}). C_{ox} and C_{dep} are capacitances between the TSV and the semiconductor substrate and dependent on the voltage applied to the TSV since depletion layer exists. C_{fr} is a fringe capacitance between a bump and the semiconductor substrate. The node of C_{dep} is connected to the ground through the substrate. When the interval of TSV is very short, coupling model is recommended. Table 1 shows a policy for model standardization. Circuit definition explains the view of proposed model. The device structure is the structure which will be the requisite in the case of using the proposed model. Measurement condition explains device structure and operating conditions for measurement. The parameters of the TSV model are derived from TSV and its surrounding structure. An example of a typical concept is shown in Annex A.

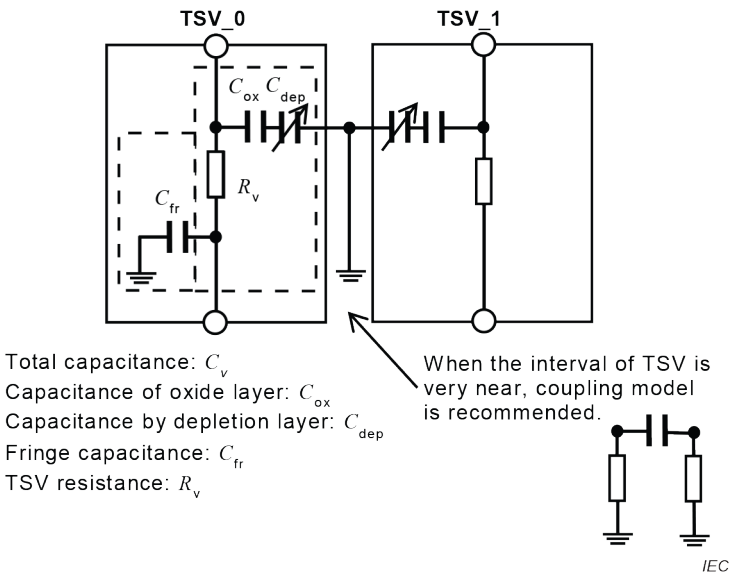

Figure 3 – TSV electrical characteristic model

Documents
Document Sharing Hub
Full document details: IEC 60311-3-2018