IEC 60318-3

Edition 2.0 2014-12

INTERNATIONAL STANDARD

NORME INTERNATIONALE

Electroacoustics – Simulators of human head and ear – Part 3: Acoustic coupler for the calibration of supra-aural earphones used in audiometry

Électroacoustique – Simulateurs de tête et d'oreille humaines – Partie 3: Coupleur acoustique pour l'étalonnage des écouteurs supra-auraux utilisés en audiométrie

IEC 60318-3:2014-12(en-fr)

Documents
Document Sharing Hub
Full document details: IEC 60318-3 2014

THIS PUBLICATION IS COPYRIGHT PROTECTED

Copyright © 2014 IEC, Geneva, Switzerland

All rights reserved. Unless otherwise specified, no part of this publication may be reproduced or utilized in any form or by any means, electronic or mechanical, including photocopying and microfilm, without permission in writing from either IEC or IEC's member National Committee in the country of the requester. If you have any questions about IEC copyright or have an enquiry about obtaining additional rights to this publication, please contact the address below or your local IEC member National Committee for further information.

Droits de reproduction réservés. Sauf indication contraire, aucune partie de cette publication ne peut être reproduite ni utilisée sous quelque forme que ce soit et par aucun procédé, électronique ou mécanique, y compris la photocopie et les microfilms, sans l'accord écrit de l'IEC ou du Comité national de l'IEC du pays du demandeur. Si vous avez des questions sur le copyright de l'IEC ou si vous désirez obtenir des droits supplémentaires sur cette publication, utilisez les coordonnées ci-après ou contactez le Comité national de l'IEC de votre pays de résidence.

IEC Central Office
3, rue de Varembé
CH-1211 Geneva 20
Switzerland

Tel.: +41 22 919 02 11
Fax: +41 22 919 03 00
info@iec.ch
www.iec.ch

About the IEC
The International Electrotechnical Commission (IEC) is the leading global organization that prepares and publishes International Standards for all electrical, electronic and related technologies.

About IEC publications
The technical content of IEC publications is kept under constant review by the IEC. Please make sure that you have the latest edition, a corrigenda or an amendment might have been published.

IEC Catalogue - webstore.iec.ch/catalogue
The stand-alone application for consulting the entire bibliographical information on IEC International Standards, Technical Specifications, Technical Reports and other documents. Available for PC, Mac OS, Android Tablets and iPad.

IEC publications search - www.iec.ch/searchpub
The advanced search enables to find IEC publications by a variety of criteria (reference number, text, technical committee,…). It also gives information on projects, replaced and withdrawn publications.

IEC Just Published - webstore.iec.ch/justpublished
Stay up to date on all new IEC publications. Just Published details all new publications released. Available online and also once a month by email.

Electropedia - www.electropedia.org
The world's leading online dictionary of electronic and electrical terms containing more than 30 000 terms and definitions in English and French, with equivalent terms in 14 additional languages. Also known as the International Electrotechnical Vocabulary (IEV) online.

IEC Glossary - std.iec.ch/glossary
More than 55 000 electrotechnical terminology entries in English and French extracted from the Terms and Definitions clause of IEC publications issued since 2002. Some entries have been collected from earlier publications of IEC TC 37, 77, 86 and CISPR.

IEC Customer Service Centre - webstore.iec.ch/csc
If you wish to give us your feedback on this publication or need further assistance, please contact the Customer Service Centre: csc@iec.ch.

A propos de l'IEC
La Commission Electrotechnique Internationale (IEC) est la première organisation mondiale qui élabore et publie des Normes internationales pour tout ce qui a trait à l'électricité, à l'électronique et aux technologies apparentées.

A propos des publications IEC
Le contenu technique des publications IEC est constamment revu. Veuillez vous assurer que vous possédez l'édition la plus récente, un corrigendum ou amendement peut avoir été publié.

Catalogue IEC - webstore.iec.ch/catalogue
Application autonome pour consulter tous les renseignements bibliographiques sur les Normes internationales, Spécifications techniques, Rapports techniques et autres documents de l'IEC. Disponible pour PC, Mac OS, tablettes Android et iPad.

Recherche de publications IEC - www.iec.ch/searchpub

La recherche avancée permet de trouver des publications IEC en utilisant différents critères (numéro de référence, texte, comité d'études,…). Elle donne aussi des informations sur les projets et les publications remplacées ou retirées.

IEC Just Published - webstore.iec.ch/justpublished

Restez informé sur les nouvelles publications IEC. Just Published détaille les nouvelles publications parues. Disponible en ligne et aussi une fois par mois par email.

Electropedia - www.electropedia.org

Le premier dictionnaire en ligne de termes électroniques et électriques. Il contient plus de 30 000 termes et définitions en anglais et en français, ainsi que les termes équivalents dans 14 langues additionnelles. Egalement appelé Vocabulaire Electrotechnique International (IEV) en ligne.

Glossaire IEC - std.iec.ch/glossary
Plus de 55 000 entrées terminologiques électrotechniques, en anglais et en français, extraites des articles Termes et Définitions des publications IEC parues depuis 2002. Plus certaines entrées antérieures extraites des publications des CE 37, 77, 86 et CISPR de l'IEC.

Service Clients - webstore.iec.ch/csc

Si vous désirez nous donner des commentaires sur cette publication ou si vous avez des questions contactez-nous: csc@iec.ch.

Documents
Document Sharing Hub

Full document details: IEC 60318-3 2014

IEC 60318-3

Edition 2.0 2014-12

INTERNATIONAL STANDARD

NORME INTERNATIONALE

Electroacoustics – Simulators of human head and ear – Part 3: Acoustic coupler for the calibration of supra-aural earphones used in audiometry

Électroacoustique – Simulateurs de tête et d'oreille humaines – Partie 3: Coupleur acoustique pour l'étalonnage des écouteurs supra-auraux utilisés en audiométrie

INTERNATIONAL
ELECTROTECHNICAL
COMMISSION

COMMISSION
ELECTROTECHNIQUE
INTERNATIONALE

PRICE CODE
CODE PRIX M

ICS 17.140.50

ISBN 978-2-8322-1930-0

Warning! Make sure that you obtained this publication from an authorized distributor.
Attention! Veuillez vous assurer que vous avez obtenu cette publication via un distributeur agréé.

® Registered trademark of the International Electrotechnical Commission
Marque déposée de la Commission Electrotechnique Internationale

AVA Documents
Document Sharing Hub

Full document details: IEC 60318-3 2014

CONTENTS

FOREWORD 3
1 Scope 5
2 Normative references 5
3 Terms and definitions 5
4 Construction 5
4.1 General 5
4.2 Cavity dimensions 6
4.3 Static pressure equalization 8
4.4 Calibrated pressure type microphone 8
5 Coupling of earphone to acoustic coupler 9
6 Calibration 9
6.1 Reference environmental conditions 9
6.2 Method of calibration 10
7 Maximum permitted uncertainty of measurements 10
Bibliography 12

Figure 1 – Dimensions of acoustic coupler 7
Figure 2 – Coupling of earphone to coupler 9

Table 1 – Height of the coupler as a function of the acoustic volume of the microphone 8
Table 2 – Values of maximum permitted uncertainties U_{max} for a level of confidence of approximately 95 % 11

Documents
Document Sharing Hub
Full document details: IEC 60318-3 2014

INTERNATIONAL ELECTROTECHNICAL COMMISSION

ELECTROACOUSTICS – SIMULATORS OF HUMAN HEAD AND EAR –

Part 3: Acoustic coupler for the calibration of supra-aural earphones used in audiometry

FOREWORD

1) The International Electrotechnical Commission (IEC) is a worldwide organization for standardization comprising all national electrotechnical committees (IEC National Committees). The object of IEC is to promote international co-operation on all questions concerning standardization in the electrical and electronic fields. To this end and in addition to other activities, IEC publishes International Standards, Technical Specifications, Technical Reports, Publicly Available Specifications (PAS) and Guides (hereafter referred to as "IEC Publication(s)"). Their preparation is entrusted to technical committees; any IEC National Committee interested in the subject dealt with may participate in this preparatory work. International, governmental and non-governmental organizations liaising with the IEC also participate in this preparation. IEC collaborates closely with the International Organization for Standardization (ISO) in accordance with conditions determined by agreement between the two organizations.
2) The formal decisions or agreements of IEC on technical matters express, as nearly as possible, an international consensus of opinion on the relevant subjects since each technical committee has representation from all interested IEC National Committees.
3) IEC Publications have the form of recommendations for international use and are accepted by IEC National Committees in that sense. While all reasonable efforts are made to ensure that the technical content of IEC Publications is accurate, IEC cannot be held responsible for the way in which they are used or for any misinterpretation by any end user.
4) In order to promote international uniformity, IEC National Committees undertake to apply IEC Publications transparently to the maximum extent possible in their national and regional publications. Any divergence between any IEC Publication and the corresponding national or regional publication shall be clearly indicated in the latter.
5) IEC itself does not provide any attestation of conformity. Independent certification bodies provide conformity assessment services and, in some areas, access to IEC marks of conformity. IEC is not responsible for any services carried out by independent certification bodies.
6) All users should ensure that they have the latest edition of this publication.
7) No liability shall attach to IEC or its directors, employees, servants or agents including individual experts and members of its technical committees and IEC National Committees for any personal injury, property damage or other damage of any nature whatsoever, whether direct or indirect, or for costs (including legal fees) and expenses arising out of the publication, use of, or reliance upon, this IEC Publication or any other IEC Publications.
8) Attention is drawn to the Normative references cited in this publication. Use of the referenced publications is indispensable for the correct application of this publication.
9) Attention is drawn to the possibility that some of the elements of this IEC Publication may be the subject of patent rights. IEC shall not be held responsible for identifying any or all such patent rights.

International Standard IEC 60318-3 has been prepared by IEC technical committee 29: Electroacoustics.

This second edition cancels and replaces the first edition published in 1998 and constitutes a technical revision.

This edition includes the following significant technical changes with respect to the previous edition:

a) adjustment of terms and wording to the other parts of IEC 60318,
b) introduction of maximum permitted uncertainties,
c) revised requirements for static pressure equalization.

AVA Documents
Document Sharing Hub

Full document details: IEC 60318-3 2014

The text of this standard is based on the following documents:

CDV	Report on voting
29/796/CDV	29/811A/RVC

Full information on the voting for the approval of this standard can be found in the report on voting indicated in the above table.

This publication has been drafted in accordance with the ISO/IEC Directives, Part 2.

A list of all the parts in the IEC 60318 series, published under the general title *Electroacoustics – Simulators of human head and ear* can be found on the IEC website.

The committee has decided that the contents of this publication will remain unchanged until the stability date indicated on the IEC web site under "http://webstore.iec.ch" in the data related to the specific publication. At this date, the publication will be

- reconfirmed,
- withdrawn,
- replaced by a revised edition, or
- amended.

Documents
Document Sharing Hub

Full document details: IEC 60318-3 2014

ELECTROACOUSTICS – SIMULATORS OF HUMAN HEAD AND EAR –

Part 3: Acoustic coupler for the calibration of supra-aural earphones used in audiometry

1 Scope

This part of IEC 60318 specifies an acoustic coupler for the measurement of supra-aural audiometric earphones in the frequency range from 125 Hz to 8 000 Hz.

The sound pressure developed by an earphone is not, in general, the same in the coupler as in a person's ear. However, the acoustic coupler can be used as an objective and reproducible means of measuring the output of supra-aural earphones. It can be used for specifying reference equivalent threshold sound pressure levels (RETSPL) for the calibration of audiometers.

2 Normative references

The following documents, in whole or in part, are normatively referenced in this document and are indispensable for its application. For dated references, only the edition cited applies. For undated references, the latest edition of the referenced document (including any amendments) applies.

IEC 61094-1, *Measurement microphones – Part 1: Specifications for laboratory standard microphones*

ISO/IEC Guide 98-3, *Uncertainty of measurement – Part 3: Guide to the expression of uncertainty in measurement (GUM:1995)*

3 Terms and definitions

For the purpose of this document, the following definition applies:

3.1
acoustic coupler
device for measuring the acoustic output of sound sources where the sound pressure is measured by a calibrated microphone coupled to the source by a cavity of predetermined shape and volume which does not necessarily approximate the acoustical impedance of the normal human ear

4 Construction

4.1 General

The coupler consists essentially of a cylindrical cavity whose acoustic transfer impedance is determined by the volume of air in the cavity and its dimensions (see 4.2). A microphone with a diaphragm having high acoustic impedance is located in the base of the cylindrical cavity.

The coupler shall be made of a material that has no negative influences on its performance. For example it should be acoustically hard and dimensionally stable. The general construction

AVA Documents
Document Sharing Hub
Full document details: IEC 60318-3 2014

of the coupler and mounting of the microphone shall aim to reduce the response to vibration of any earphone or to sound outside the cavity.

In the following, the specified tolerance shall be reduced by an amount equal to the actual expanded measurement uncertainty of the test laboratory before deciding if a device conforms to this specification.

4.2 Cavity dimensions

The critical dimensions (see Figure 1) of the coupler are those that determine the shape and volume of the cavity terminated by the microphone, the static pressure equalization mechanism, the upper edge (lip) and the 45° angle.

The effective acoustic volume of the coupler shall be 5 780 mm^3 ± 130 mm^3.

The diameter d_1 shall be 23,825 mm ± 0,080 mm.

Diameter d_2 shall be 18,55 mm ± 0,16 mm.

The height l_2 shall be 1,950 mm ± 0,065 mm.

The angle β defining the slope of the external part of the coupler shall be 45° ± 5,5°.

The height h of the coupler shall be calculated according to the following formula:

$$h = \frac{V_1 - V_{eq} - V_2}{\frac{1}{4}\pi d_1^2} \tag{1}$$

where

V_1 is the effective acoustic volume;

V_{eq} is the equivalent acoustic volume of the microphone;

V_2 is the volume of the front cavity of the microphone, given by

$$V_2 = \frac{1}{4}\pi d_2^2 \cdot l_2 \tag{2}$$

It is recommended that a value of h be selected from Table 1, according to the value of the equivalent acoustic volume of the microphone.

NOTE 1 It is recognized that certain combinations of coupler cavity and microphone could cause problems if the tolerance of the coupler diameter is exploited towards the smallest allowed diameter and at the same time, the tolerance of the microphone diameter is exploited towards the largest allowed diameter. Practical experience however, has proven that those problems are very unlikely to occur.

Documents
Document Sharing Hub
Full document details: IEC 60318-3 2014

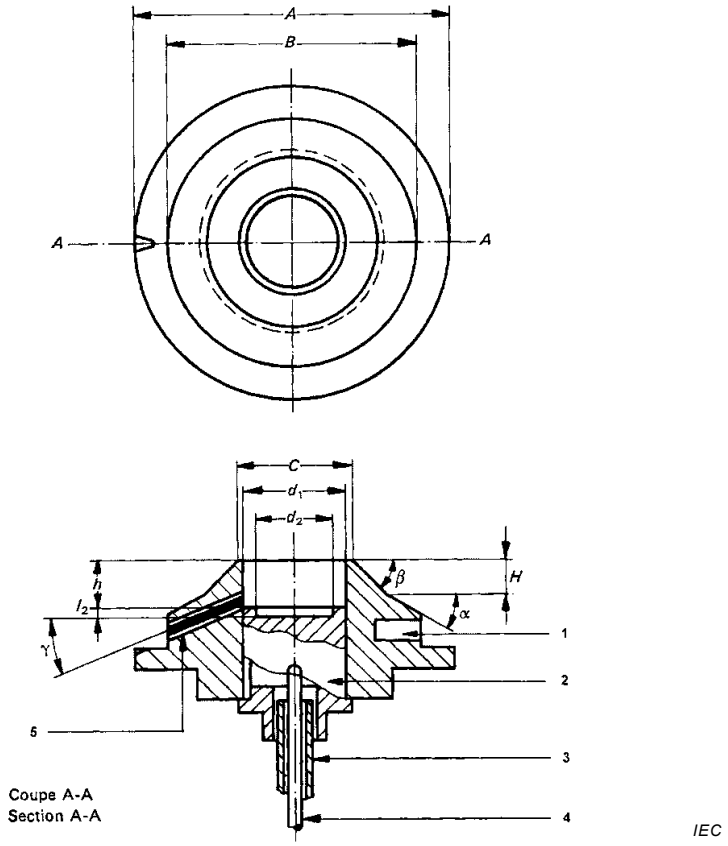

Dimension	Specification mm
A	73
B	57,2
C	25,27
d_1	**23,825**
d_2	**18,55**
l_2	**1,95**
h	**See 4.2, Equation.(1), Table 1**
H	7,5
Angle	**In degrees**
α	25
ß	**45**
Y	25
The dimensions printed in bold are the critical dimensions that determine the shape and volume of the cavity terminated by the microphone, the capillary leak, the upper edge (lip) and the 45° angle, see 4.2	

Key

1 hole for thermometer

2 microphone

3 ground shield

4 contact pin

5 venting mechanism, see 4.3.

Figure 1 – Dimensions of acoustic coupler

Documents
Document Sharing Hub

Full document details: IEC 60318-3 2014