IEC 60318-4

Edition 1.0 2010-01

INTERNATIONAL STANDARD

NORME INTERNATIONALE

Electroacoustics – Simulators of human head and ear – Part 4: Occluded-ear simulator for the measurement of earphones coupled to the ear by means of ear inserts

Électroacoustique – Simulateurs de tête et d'oreille humaines – Partie 4: Simulateur d'oreille occluse pour la mesure des écouteurs couplés à l'oreille par des embouts

IEC 60318-4:2010

Documents
Document Sharing Hub

Full document details: IEC 60318-4 2010

THIS PUBLICATION IS COPYRIGHT PROTECTED

Copyright © 2010 IEC, Geneva, Switzerland

All rights reserved. Unless otherwise specified, no part of this publication may be reproduced or utilized in any form or by any means, electronic or mechanical, including photocopying and microfilm, without permission in writing from either IEC or IEC's member National Committee in the country of the requester.
If you have any questions about IEC copyright or have an enquiry about obtaining additional rights to this publication, please contact the address below or your local IEC member National Committee for further information.

Droits de reproduction réservés. Sauf indication contraire, aucune partie de cette publication ne peut être reproduite ni utilisée sous quelque forme que ce soit et par aucun procédé, électronique ou mécanique, y compris la photocopie et les microfilms, sans l'accord écrit de la CEI ou du Comité national de la CEI du pays du demandeur.
Si vous avez des questions sur le copyright de la CEI ou si vous désirez obtenir des droits supplémentaires sur cette publication, utilisez les coordonnées ci-après ou contactez le Comité national de la CEI de votre pays de résidence.

IEC Central Office
3, rue de Varembé
CH-1211 Geneva 20
Switzerland
Email: inmail@iec.ch
Web: www.iec.ch

About the IEC

The International Electrotechnical Commission (IEC) is the leading global organization that prepares and publishes International Standards for all electrical, electronic and related technologies.

About IEC publications

The technical content of IEC publications is kept under constant review by the IEC. Please make sure that you have the latest edition, a corrigenda or an amendment might have been published.

- Catalogue of IEC publications: www.iec.ch/searchpub
The IEC on-line Catalogue enables you to search by a variety of criteria (reference number, text, technical committee,…). It also gives information on projects, withdrawn and replaced publications.
- IEC Just Published: www.iec.ch/online_news/justpub
Stay up to date on all new IEC publications. Just Published details twice a month all new publications released. Available on-line and also by email.
- Electropedia: www.electropedia.org
The world's leading online dictionary of electronic and electrical terms containing more than 20 000 terms and definitions in English and French, with equivalent terms in additional languages. Also known as the International Electrotechnical Vocabulary online.
- Customer Service Centre: www.iec.ch/webstore/custserv
If you wish to give us your feedback on this publication or need further assistance, please visit the Customer Service Centre FAQ or contact us:
Email: csc@iec.ch
Tel.: +41 22 919 02 11
Fax: +41 22 919 03 00

A propos de la CEI

La Commission Electrotechnique Internationale (CEI) est la première organisation mondiale qui élabore et publie des normes internationales pour tout ce qui a trait à l'électricité, à l'électronique et aux technologies apparentées.

A propos des publications CEI

Le contenu technique des publications de la CEI est constamment revu. Veuillez vous assurer que vous possédez l'édition la plus récente, un corrigendum ou amendement peut avoir été publié.

- Catalogue des publications de la CEI: www.iec.ch/searchpub/cur_fut-f.htm
Le Catalogue en-ligne de la CEI vous permet d'effectuer des recherches en utilisant différents critères (numéro de référence, texte, comité d'études,…). Il donne aussi des informations sur les projets et les publications retirées ou remplacées.
- Just Published CEI: www.iec.ch/online_news/justpub
Restez informé sur les nouvelles publications de la CEI. Just Published détaille deux fois par mois les nouvelles publications parues. Disponible en-ligne et aussi par email.
- Electropedia: www.electropedia.org
Le premier dictionnaire en ligne au monde de termes électroniques et électriques. Il contient plus de 20 000 termes et définitions en anglais et en français, ainsi que les termes équivalents dans les langues additionnelles. Egalement appelé Vocabulaire Electrotechnique International en ligne.
- Service Clients: www.iec.ch/webstore/custserv/custserv_entry-f.htm
Si vous désirez nous donner des commentaires sur cette publication ou si vous avez des questions, visitez le FAQ du Service clients ou contactez-nous:
Email: csc@iec.ch
Tél.: +41 22 919 02 11
Fax: +41 22 919 03 00

Documents
Document Sharing Hub

Full document details: IEC 60318-4 2010

IEC 60318-4

Edition 1.0 2010-01

INTERNATIONAL STANDARD

NORME INTERNATIONALE

Electroacoustics – Simulators of human head and ear – Part 4: Occluded-ear simulator for the measurement of earphones coupled to the ear by means of ear inserts

Électroacoustique – Simulateurs de tête et d'oreille humaines – Partie 4: Simulateur d'oreille occluse pour la mesure des écouteurs couplés à l'oreille par des embouts

INTERNATIONAL ELECTROTECHNICAL COMMISSION

COMMISSION ELECTROTECHNIQUE INTERNATIONALE

PRICE CODE
CODE PRIX

R

ICS 17.140.50

ISBN 978-2-88910-121-4

® Registered trademark of the International Electrotechnical Commission
Marque déposée de la Commission Electrotechnique Internationale

Documents
Document Sharing Hub

Full document details: IEC 60318-4 2010

CONTENTS

FOREWORD ... 3
1 Scope ... 5
2 Normative references ... 5
3 Terms and definitions ... 5
4 Construction ... 7
4.1 General ... 7
4.2 Principal cavity dimensions ... 7
4.3 Calibrated pressure-type microphone ... 7
4.4 Pressure equalization ... 8
4.5 Acoustic transfer impedance level ... 8
4.6 Example of design ... 8
5 Calibration ... 9
5.1 Atmospheric reference conditions ... 9
5.2 Calibration method ... 9
6 Coupling of earphones and hearing aids to the occluded-ear simulator ... 9
6.1 Audiometers with insert earphones ... 9
6.2 In-the-ear hearing aids (custom made) ... 9
6.3 Hearing aids with insert earphone ... 10
6.4 Behind-the-ear and spectacle hearing aids ... 11
6.5 Modular in-the-ear hearing aids ... 12
7 Maximum permitted expanded uncertainty of measurements ... 14
Annex A (informative) Example of one specific design of occluded-ear simulator ... 16
Annex B (informative) Principle of calibration for the occluded-ear simulator ... 17
Bibliography ... 19

Figure 1 – Connection of an in-the-ear hearing aid to the occluded-ear simulator ... 10
Figure 2 – Connection of an insert earphone to the occluded-ear simulator ... 11
Figure 3 – Connection of a behind-the-ear hearing aid to the occluded-ear simulator ... 13
Figure 4 – Connection of an in-the-ear hearing aid (modular type) to the occluded-ear simulator ... 14
Figure A.1 – Example of one specific design of occluded-ear simulator ... 16

Table 1 – Level of the acoustic transfer impedance modulus and associated tolerances ... 8
Table 2 – Values of maximum permitted expanded uncertainty U_{max} for basic type approval measurements ... 15
Table B.1 – Sound pressure level relative to that at the reference frequency 500 Hz ($L_p(f) - L_p(500)$) for the nominal effective volume (1 260 mm^3) of the occluded-ear simulator, and associated tolerances ... 18

Documents
Document Sharing Hub
Full document details: IEC 60318-4 2010

INTERNATIONAL ELECTROTECHNICAL COMMISSION

ELECTROACOUSTICS – SIMULATORS OF HUMAN HEAD AND EAR –

Part 4: Occluded-ear simulator for the measurement of earphones coupled to the ear by means of ear inserts

FOREWORD

1) The International Electrotechnical Commission (IEC) is a worldwide organization for standardization comprising all national electrotechnical committees (IEC National Committees). The object of IEC is to promote international co-operation on all questions concerning standardization in the electrical and electronic fields. To this end and in addition to other activities, IEC publishes International Standards, Technical Specifications, Technical Reports, Publicly Available Specifications (PAS) and Guides (hereafter referred to as "IEC Publication(s)"). Their preparation is entrusted to technical committees; any IEC National Committee interested in the subject dealt with may participate in this preparatory work. International, governmental and non-governmental organizations liaising with the IEC also participate in this preparation. IEC collaborates closely with the International Organization for Standardization (ISO) in accordance with conditions determined by agreement between the two organizations.
2) The formal decisions or agreements of IEC on technical matters express, as nearly as possible, an international consensus of opinion on the relevant subjects since each technical committee has representation from all interested IEC National Committees.
3) IEC Publications have the form of recommendations for international use and are accepted by IEC National Committees in that sense. While all reasonable efforts are made to ensure that the technical content of IEC Publications is accurate, IEC cannot be held responsible for the way in which they are used or for any misinterpretation by any end user.
4) In order to promote international uniformity, IEC National Committees undertake to apply IEC Publications transparently to the maximum extent possible in their national and regional publications. Any divergence between any IEC Publication and the corresponding national or regional publication shall be clearly indicated in the latter.
5) IEC itself does not provide any attestation of conformity. Independent certification bodies provide conformity assessment services and, in some areas, access to IEC marks of conformity. IEC is not responsible for any services carried out by independent certification bodies.
6) All users should ensure that they have the latest edition of this publication.
7) No liability shall attach to IEC or its directors, employees, servants or agents including individual experts and members of its technical committees and IEC National Committees for any personal injury, property damage or other damage of any nature whatsoever, whether direct or indirect, or for costs (including legal fees) and expenses arising out of the publication, use of, or reliance upon, this IEC Publication or any other IEC Publications.
8) Attention is drawn to the Normative references cited in this publication. Use of the referenced publications is indispensable for the correct application of this publication.
9) Attention is drawn to the possibility that some of the elements of this IEC Publication may be the subject of patent rights. IEC shall not be held responsible for identifying any or all such patent rights.

International Standard IEC 60318-4 has been prepared by IEC technical committee 29: Electroacoustics.

This first edition of IEC 60318-4 cancels and replaces IEC 60711, published in 1981 and constitutes a technical revision.

The main changes with respect to the previous edition are listed below:

– extension of the usable frequency range to 100 Hz – 16 000 Hz;
– addition of values of maximum permitted expanded uncertainties to all tolerances.

AVA Documents
Document Sharing Hub

Full document details: IEC 60318-4 2010

The text of this standard is based on the following documents:

Enquiry draft	Report on voting
29/662/CDV	29/685/RVC

Full information on the voting for the approval of this standard can be found in the report on voting indicated in the above table.

This publication has been drafted in accordance with the ISO/IEC Directives, Part 2.

A list of all parts of the IEC 60318 series can be found on the IEC website under the title: *Electroacoustics – Simulators of human head and ear.*

The committee has decided that the contents of this publication will remain unchanged until the maintenance result date indicated on the IEC web site under "http://webstore.iec.ch" in the data related to the specific publication. At this date, the publication will be

- reconfirmed,
- withdrawn,
- replaced by a revised edition, or
- amended.

Documents
Document Sharing Hub

Full document details: IEC 60318-4 2010

ELECTROACOUSTICS – SIMULATORS OF HUMAN HEAD AND EAR –

Part 4: Occluded-ear simulator for the measurement of earphones coupled to the ear by means of ear inserts

1 Scope

This part of IEC 60318 describes an occluded-ear simulator intended for the measurement of insert earphones in the frequency range from 100 Hz to 10 000 Hz. It is suitable for air conduction hearing aids and earphones, coupled to the ear by means of ear inserts e.g. ear moulds or similar devices. The occluded-ear simulator is also suitable as the basis for an extension intended to simulate the complete ear canal and the outer ear (for instance in head simulators).

The occluded-ear simulator simulates the acoustic transfer impedance for the occluded normal adult human ear. However, it does not simulate the leakage between an earmould and a human ear canal; therefore, the results obtained with the occluded-ear simulator may deviate from the performance of an insert earphone on a real ear, especially at low frequencies. Moreover, large performance variations among individual ears will occur which should be considered when using the ear simulator.

Above 10 kHz the device does not simulate a human ear, but can be used as an acoustic coupler at additional frequencies up to 16 kHz. Below 100 Hz, the device has not been verified to simulate a human ear, but can be used as an acoustic coupler at additional frequencies down to 20 Hz.

NOTE Due to resonances in the acoustic transfer impedance of the occluded-ear simulator above 10 kHz, high measurement uncertainties, e.g. in the order of 10 dB, can occur in earphone responses. Repeatable results mainly are obtained for insert earphones with high acoustic damping (used for instance in the extended high-frequency audiometry, see the earphones listed in ISO 389-6)[3][1] coupled to the occluded-ear simulator by means of a simple, symmetrically designed and air tight coupling device.

2 Normative references

The following referenced documents are indispensable for the application of this document. For dated references, only the edition cited applies. For undated references, the latest edition of the referenced document (including any amendments) applies.

IEC 61094-4, *Measurement microphones – Part 4: Specifications for working standard microphones*

ISO/IEC Guide 98-3, *Uncertainty of measurement – Part 3: Guide to the expression of uncertainty in measurement (GUM:1995)*

3 Terms and definitions

For the purposes of this document, the following terms and definitions apply.

[1] Figures in square brackets refer to the Bibliography.

Documents
Document Sharing Hub

Full document details: IEC 60318-4 2010

3.1
ear insert
device used to provide the acoustic coupling between an earphone and the ear canal (e.g. an earmould or a similar device with or without a connecting tube)

3.2
insert earphone
small earphone coupled to the ear canal by means of an ear insert or attached to a connecting element which is inserted into the ear canal

NOTE This ear insert may be a part of the insert earphone.

3.3
ear-mould simulator
ear insert simulator
insert which terminates the entrance of the ear simulator and provides for passage of sound into the occluded-ear simulator through an opening on its axis

3.4
ear simulator
device for measuring the acoustic output of sound sources where the sound pressure is measured by a calibrated microphone coupled to the source so that the overall acoustic impedance of the device approximates that of the normal human ear at a given location and in a given frequency band

3.5
occluded-ear simulator
ear simulator which approximates the acoustic transfer impedance of the inner part of the ear canal, from the tip of an ear insert to the eardrum

3.6
acoustic coupler
device for measuring the acoustic output of sound sources where the sound pressure is measured by a calibrated microphone coupled to the source by a cavity of predetermined shape and volume which does not necessarily approximate the acoustical impedance of the normal human ear

3.7
reference plane of the occluded-ear simulator
plane perpendicular to the axis of the cavity of the simulator, chosen to pass through the position normally occupied by the tip of an earmould in a human ear

3.8
acoustic transfer impedance of the occluded-ear simulator
quotient of the sound pressure at the diaphragm of its microphone by the volume velocity through the reference plane

unit: $Pa \cdot s \cdot m^{-3}$

3.9
acoustic transfer impedance level of the occluded-ear simulator
ten times the logarithm to the base of ten of the quotient of the absolute value (modulus) of the squared acoustic transfer impedance of the occluded-ear simulator by the squared reference acoustic transfer impedance of one pascal second per cubic metre ($Pa \cdot s \cdot m^{-3}$)

unit: dB

Documents
Document Sharing Hub
Full document details: IEC 60318-4 2010

3.10
effective volume
equivalent volume of air of the acoustic compliance of the ear simulator formed by the cavity and the microphone at a frequency of 500 Hz

unit: mm^3

4 Construction

4.1 General

The occluded-ear simulator shall be constructed of hard, dimensionally stable, non-porous and non-magnetic material. The general construction of the occluded-ear simulator and mounting of the microphone shall aim at minimizing the response of the microphone to vibration (for example from an earphone) or to extraneous sound outside the cavity.

NOTE 1 The external diameter of the occluded-ear simulator should be kept as small as possible in order to minimize diffractional errors which might affect the measurements when the occluded-ear simulator has to be placed in a free sound field.

NOTE 2 In order to avoid a possible sound attenuation caused by the dust protector (see Figure A.1), an earphone calibration should be performed above 10 kHz at least every two years with the occluded-ear simulator equipped with and without its dust protector in place. The two results should not differ by more than 0,2 dB at frequencies up to 16 kHz. If this is not the case at some frequencies, earphone measurements at those frequencies should generally be performed without the dust protector.

The construction of the occluded-ear simulator shall permit the location of a transducer at the reference plane for calibrating the simulator.

Where tolerances are specified in this part of IEC 60318, these shall be reduced by an amount equal to the actual expanded measurement uncertainty of the test laboratory before deciding if a device conforms to the stated requirement.

4.2 Principal cavity dimensions

The diameter of the principal cavity shall be (7,50 ± 0,04) mm.

The length of the principal cavity shall be such as to produce a half-wavelength resonance of the sound pressure at (13,5 ± 1,5) kHz.

4.3 Calibrated pressure-type microphone

A calibrated microphone is located at the base of principal cavity of the occluded-ear simulator. The acoustic impedance of the microphone diaphragm shall be high, so that the equivalent volume is less than 20 mm^3 over the specified range of frequencies. The microphone shall conform to the requirements of IEC 61094-4 for a type WS2P microphone. The microphone shall be coupled to the principal cavity with a seal that prevents acoustic leaks.

In the frequency range 20 Hz to 10 kHz, the overall sound pressure sensitivity level of the microphone and associated measuring system shall be known with an uncertainty not exceeding 0,3 dB for a level of confidence of 95 %. For measurements above 10 kHz, the overall pressure sensitivity level of the microphone and associated measuring system over the specified frequency range shall be known with an uncertainty not exceeding 0,5 dB for a level of confidence of 95 %.

The make and model of the microphone shall be specified by the manufacturer of the occluded-ear simulator.

NOTE The acoustic impedance of the microphone affects the overall acoustic impedance of the occluded-ear simulator.

AVA Documents
Document Sharing Hub

Full document details: IEC 60318-4 2010

4.4 Pressure equalization

A vent shall be provided to equalize the static pressure in the cavity of the occluded-ear simulator. The vent shall have an acoustic resistance of (7,0 ± 5,5) GPa·s·m^{-3}.

4.5 Acoustic transfer impedance level

The level of the acoustic transfer impedance modulus of the occluded-ear simulator and the associated tolerances shall be as specified in Table 1.

NOTE 1 At 500 Hz, the specified transfer impedance level corresponds to the magnitude of the acoustic transfer impedance 35,9 MPa·s·m^{-3} and also to the magnitude of the effective volume 1 260 mm^3 of the ear simulator.

NOTE 2 The tolerances have minimum values at the frequency 500 Hz, where the influence of leakage and wave motion is small.

4.6 Example of design

An example of one specific design of occluded-ear simulator is shown in Annex A.

Table 1 – Level of the acoustic transfer impedance modulus and associated tolerances

Nominal frequency Hz	Acoustic transfer impedance level re 1 MPa·s·m^{-3} in dB	
	Level	Tolerances
100	44,8	± 0,7
125	42,9	± 0,7
160	40,8	± 0,7
200	39,0	± 0,6
250	37,0	± 0,6
315	35,0	± 0,6
400	33,0	± 0,6
500	31,1	± 0,3
630	29,2	± 0,6
800	27,2	± 0,6
1 000	26,7	± 0,7
1 250	26,4	± 0,7
1 600	25,5	± 0,7
2 000	24,2	± 0,8
2 500	23,1	± 0,8
3 150	22,0	± 0,9
4 000	21,1	± 1,0
5 000	20,4	± 1,2
6 300	20,5	± 1,2
8 000	20,8	± 1,7
10 000	23,1	± 2,2

NOTE 1 Using the measurement method described in Annex B, it is not easy to measure the acoustical transfer impedance level below 100 Hz, due to the effects of an imperfectly sealed measurement configuration. However, the acoustical transfer impedance between 20 Hz and 100 Hz is governed predominantly by the volumetric elements of the occluded-ear simulator, and their contribution to the overall acoustical transfer impedance can be validated by the measurements at higher frequencies.

AVA Documents Document Sharing Hub

Full document details: IEC 60318-4 2010

NOTE 2 The values in Table 1 are valid for the exact one-third-octave frequencies calculated from $1\,000 \times 10^{n/10}$, where n is a positive or negative integer or zero.

5 Calibration

5.1 Atmospheric reference conditions

Reference ambient pressure: 101,325 kPa

Reference temperature: 23 °C

Reference relative humidity: 50 %

5.2 Calibration method

The manufacturer shall describe the method(s) for determining calibration and overall stability of the complete occluded-ear simulator including the microphone in an instruction manual.

The method shall include the determination of the effective volume at 500 Hz.

The principle of calibration is given in Annex B.

The calibration should be performed for the atmospheric reference conditions given in 5.1 with the following tolerances:

Ambient pressure: ± 3 kPa

Temperature: ± 3 °C

Relative humidity: ± 20 %

If it is not possible to perform the calibration at reference conditions, the calibration shall be referred to the atmospheric reference conditions given in 5.1, see [8], [9].

6 Coupling of earphones and hearing aids to the occluded-ear simulator

6.1 Audiometers with insert earphones

Insert earphones with standardized reference equivalent threshold sound pressure levels shall be connected to the occluded-ear simulator as specified in the relevant ISO standards. For other earphones, the manufacturer of the audiometer shall describe the method of connection.

NOTE Reference hearing threshold sound pressure levels of insert earphones for audiometers and its connection to the occluded-ear simulator are standardized in ISO 389-2 [1], ISO 389-5 [2] and ISO 389-6 [3].

6.2 In-the-ear hearing aids (custom made)

The hearing aid shall be connected directly to the cavity of the occluded-ear simulator as indicated in Figure 1. The connection between the hearing aid and the occluded-ear simulator shall be made airtight by using a suitable seal. In doing so, care shall be taken not to introduce additional volume to the cavity which can affect the measured performance of the hearing aid.

In the same way, a hearing aid equipped with a separate ear insert can be measured.

Documents
Document Sharing Hub
Full document details: IEC 60318-4 2010

Dimensions in millimetres

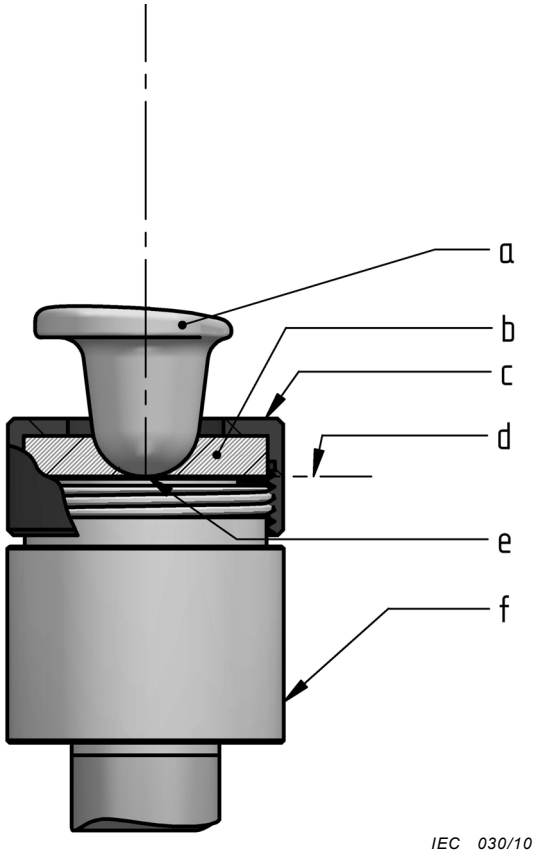

Key

a hearing aid (custom-made)

b airtight seal and support for hearing aid

c retaining collar

d reference plane

e tip of hearing aid or insert should lie in the reference plane

f occluded-ear simulator

NOTE 1 This diagram is only intended as a schematic representation illustrating the principle of connecting the hearing aid to the occluded-ear simulator. Effective airtight seals should be assured at all connection points.

NOTE 2 In the same manner, a hearing aid equipped with a separate ear insert can be connected to the occluded ear simulator.

Figure 1 – Connection of an in-the-ear hearing aid to the occluded-ear simulator

6.3 Hearing aids with insert earphone

Where possible, the ear insert used with the human ear shall be replaced by an ear-mould simulator consisting essentially of a rigid tube, coaxial with the cavity, of length 18,0 mm ± 0,20 mm and internal diameter 3,00 mm ± 0,06 mm, representing the tubular portion of an average ear mould.

The connection between the nub of the earphone and the ear-mould simulator shall be made airtight by using a suitable seal, In doing so, care shall be taken not to introduce additional volume to the cavity which can affect the measured performance of the earphone.

Documents
Document Sharing Hub
Full document details: IEC 60318-4 2010

An example of an earphone connected to the occluded-ear simulator with an ear-mould simulator is shown in Figure 2. It illustrates the principal features of the connection method. However, other forms may also be used, provided that they conform to the above specifications.

Dimensions in millimetres

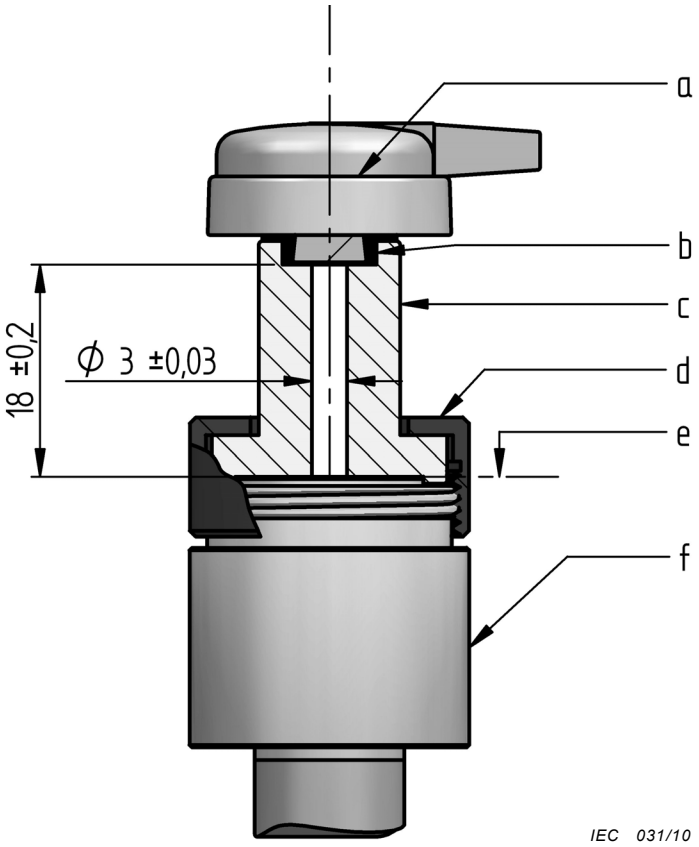

Key

a insert earphone

b airtight seal and support for nub of earphone

c ear-mould simulator for insert earphone

d retaining collar

e reference plane

f occluded-ear simulator

NOTE This diagram is only intended as a schematic representation illustrating the principle of connecting the hearing aid to the occluded-ear simulator. Effective airtight seals should be assured at all connection points.

Figure 2 – Connection of an insert earphone to the occluded-ear simulator

If it is inappropriate to disconnect the ear insert used with the human ear from the receiver, the ear insert shall be connected directly to the entrance of the cylindrical cavity and shall be coaxial with it. An airtight seal shall be ensured. In doing so, care shall be taken not to introduce additional volume to the cavity which can affect the measured performance of the earphone.

6.4 Behind-the-ear and spectacle hearing aids

The hearing aid with its acoustic outlet attachment (e.g. hook and flexible connecting tube of behind-the-ear hearing aids or nub and flexible connecting tube of spectacle hearing aids)

AVA Documents
Document Sharing Hub
Full document details: IEC 60318-4 2010