IEC 60331-3

Edition 2.0 2018-03

INTERNATIONAL STANDARD

NORME INTERNATIONALE

Tests for electric cables under fire conditions – circuit integrity – Part 3: Test method for fire with shock at a temperature of at least 830 °C for cables of rated voltage up to and including 0,6/1,0 kV tested in a metal enclosure

Essais pour câbles électriques soumis au feu – intégrité des circuits – Partie 3: Méthode d'essai au feu pour les câbles de tension assignée au plus égale à 0,6/1,0 kV, soumis à essai sous conduit métallique avec chocs, à une température d'au moins 830 °C

IEC 60331-3:2018-03(en-fr)

Documents
Document Sharing Hub

Full document details: IEC 60331-3-2018

THIS PUBLICATION IS COPYRIGHT PROTECTED
Copyright © 2018 IEC, Geneva, Switzerland

All rights reserved. Unless otherwise specified, no part of this publication may be reproduced or utilized in any form or by any means, electronic or mechanical, including photocopying and microfilm, without permission in writing from either IEC or IEC's member National Committee in the country of the requester. If you have any questions about IEC copyright or have an enquiry about obtaining additional rights to this publication, please contact the address below or your local IEC member National Committee for further information.

Droits de reproduction réservés. Sauf indication contraire, aucune partie de cette publication ne peut être reproduite ni utilisée sous quelque forme que ce soit et par aucun procédé, électronique ou mécanique, y compris la photocopie et les microfilms, sans l'accord écrit de l'IEC ou du Comité national de l'IEC du pays du demandeur. Si vous avez des questions sur le copyright de l'IEC ou si vous désirez obtenir des droits supplémentaires sur cette publication, utilisez les coordonnées ci-après ou contactez le Comité national de l'IEC de votre pays de résidence.

IEC Central Office
3, rue de Varembé
CH-1211 Geneva 20
Switzerland

Tel.: +41 22 919 02 11
info@iec.ch
www.iec.ch

About the IEC
The International Electrotechnical Commission (IEC) is the leading global organization that prepares and publishes International Standards for all electrical, electronic and related technologies.

About IEC publications
The technical content of IEC publications is kept under constant review by the IEC. Please make sure that you have the latest edition, a corrigenda or an amendment might have been published.

IEC Catalogue - webstore.iec.ch/catalogue
The stand-alone application for consulting the entire bibliographical information on IEC International Standards, Technical Specifications, Technical Reports and other documents. Available for PC, Mac OS, Android Tablets and iPad.

IEC publications search - webstore.iec.ch/advsearchform
The advanced search enables to find IEC publications by a variety of criteria (reference number, text, technical committee,…). It also gives information on projects, replaced and withdrawn publications.

IEC Just Published - webstore.iec.ch/justpublished
Stay up to date on all new IEC publications. Just Published details all new publications released. Available online and also once a month by email.

Electropedia - www.electropedia.org
The world's leading online dictionary of electronic and electrical terms containing 21 000 terms and definitions in English and French, with equivalent terms in 16 additional languages. Also known as the International Electrotechnical Vocabulary (IEV) online.

IEC Glossary - std.iec.ch/glossary
67 000 electrotechnical terminology entries in English and French extracted from the Terms and Definitions clause of IEC publications issued since 2002. Some entries have been collected from earlier publications of IEC TC 37, 77, 86 and CISPR.

IEC Customer Service Centre - webstore.iec.ch/csc
If you wish to give us your feedback on this publication or need further assistance, please contact the Customer Service Centre: sales@iec.ch.

A propos de l'IEC
La Commission Electrotechnique Internationale (IEC) est la première organisation mondiale qui élabore et publie des Normes internationales pour tout ce qui a trait à l'électricité, à l'électronique et aux technologies apparentées.

A propos des publications IEC
Le contenu technique des publications IEC est constamment revu. Veuillez vous assurer que vous possédez l'édition la plus récente, un corrigendum ou amendement peut avoir été publié.

Catalogue IEC - webstore.iec.ch/catalogue
Application autonome pour consulter tous les renseignements bibliographiques sur les Normes internationales, Spécifications techniques, Rapports techniques et autres documents de l'IEC. Disponible pour PC, Mac OS, tablettes Android et iPad.

Recherche de publications IEC - webstore.iec.ch/advsearchform

La recherche avancée permet de trouver des publications IEC en utilisant différents critères (numéro de référence, texte, comité d'études,…). Elle donne aussi des informations sur les projets et les publications remplacées ou retirées.

IEC Just Published - webstore.iec.ch/justpublished

Restez informé sur les nouvelles publications IEC. Just Published détaille les nouvelles publications parues. Disponible en ligne et aussi une fois par mois par email.

Electropedia - www.electropedia.org

Le premier dictionnaire en ligne de termes électroniques et électriques. Il contient 21 000 termes et définitions en anglais et en français, ainsi que les termes équivalents dans 16 langues additionnelles. Egalement appelé Vocabulaire Electrotechnique International (IEV) en ligne.

Glossaire IEC - std.iec.ch/glossary
67 000 entrées terminologiques électrotechniques, en anglais et en français, extraites des articles Termes et Définitions des publications IEC parues depuis 2002. Plus certaines entrées antérieures extraites des publications des CE 37, 77, 86 et CISPR de l'IEC.

Service Clients - webstore.iec.ch/csc

Si vous désirez nous donner des commentaires sur cette publication ou si vous avez des questions contactez-nous: sales@iec.ch.

Documents
Document Sharing Hub

Full document details: IEC 60331-3-2018

IEC 60331-3

Edition 2.0 2018-03

INTERNATIONAL STANDARD

NORME INTERNATIONALE

Tests for electric cables under fire conditions – circuit integrity – Part 3: Test method for fire with shock at a temperature of at least 830 °C for cables of rated voltage up to and including 0,6/1,0 kV tested in a metal enclosure

Essais pour câbles électriques soumis au feu – intégrité des circuits – Partie 3: Méthode d'essai au feu pour les câbles de tension assignée au plus égale à 0,6/1,0 kV, soumis à essai sous conduit métallique avec chocs, à une température d'au moins 830 °C

INTERNATIONAL
ELECTROTECHNICAL
COMMISSION

COMMISSION
ELECTROTECHNIQUE
INTERNATIONALE

ICS 29.060.20

ISBN 978-2-8322-6152-1

Warning! Make sure that you obtained this publication from an authorized distributor.
Attention! Veuillez vous assurer que vous avez obtenu cette publication via un distributeur agréé.

® Registered trademark of the International Electrotechnical Commission
Marque déposée de la Commission Electrotechnique Internationale

Documents
Document Sharing Hub

Full document details: IEC 60331-3-2018

CONTENTS

CONTENTS 2
FOREWORD 4
INTRODUCTION 6
1 Scope 7
2 Normative references 7
3 Terms and definitions 8
4 Test environment 8
5 Test apparatus 9
5.1 Test equipment 9
5.2 Metal enclosure 9
5.2.1 Material and dimensions 9
5.2.2 Metal enclosure selection 9
5.3 Test ladder and mounting 9
5.4 Source of heat 15
5.4.1 Burner 15
5.4.2 Flow meters and flow rates 16
5.4.3 Verification 17
5.5 Shock-producing device 18
5.6 Positioning of source of heat 18
5.7 Continuity checking arrangements for electric power and control cables with rated voltage up to and including 600 V/1 000 V 18
5.8 Fuses 18
6 Test specimen (electric power and control cables with rated voltage up to and including 600 V/1 000 V) 19
6.1 Test specimen preparation 19
6.2 Test specimen mounting 19
7 Test procedure (electric power and control cables with rated voltage up to and including 600 V/1 000 V) 19
7.1 Test equipment and arrangement 19
7.2 Electrical connections 20
7.3 Flame and shock application 21
7.4 Electrification 21
8 Performance requirements (electric power and control cables with rated voltage up to and including 600 V/1 000 V) 22
8.1 Flame application time 22
8.2 Acceptance criteria 22
9 Retest procedure 22
10 Test report (electric power and control cables with rated voltage up to and including 600 V/1 000 V) 22
Annex A (normative) Verification procedure for the source of heat 23
A.1 Measuring equipment 23
A.2 Procedure 23
A.3 Evaluation 24
A.4 Further verification 24
A.5 Verification report 24

AVA Documents
Document Sharing Hub
Full document details: IEC 60331-3-2018

Annex B (informative) Guidance on the choice of recommended test apparatus (burner and venturi) 25
Bibliography 26

Figure 1 – Schematic diagram of test configuration 11
Figure 2 – Recommended method of mounting the metal enclosure to the test ladder 12
Figure 3 – Plan view of fire test equipment 13
Figure 4 – End elevation of fire test equipment (not to scale) 14
Figure 5 – Typical rubber bush for supporting the test ladder 15
Figure 6 – Burner face 16
Figure 7 – Schematic diagram of an example of a burner control system 17
Figure 8 – Basic circuit diagram 21
Figure A.1 – Temperature measuring arrangement 23

Table 1 – Enclosure dimensions 9
Table 2 – Multicore sheathed cable 19
Table 3 – Single core unsheathed or sheathed cable 19

Documents
Document Sharing Hub

Full document details: IEC 60331-3-2018

INTERNATIONAL ELECTROTECHNICAL COMMISSION

TESTS FOR ELECTRIC CABLES UNDER FIRE CONDITIONS – CIRCUIT INTEGRITY –

Part 3: Test method for fire with shock at a temperature of at least 830 °C for cables of rated voltage up to and including 0,6/1,0 kV tested in a metal enclosure

FOREWORD

1) The International Electrotechnical Commission (IEC) is a worldwide organization for standardization comprising all national electrotechnical committees (IEC National Committees). The object of IEC is to promote international co-operation on all questions concerning standardization in the electrical and electronic fields. To this end and in addition to other activities, IEC publishes International Standards, Technical Specifications, Technical Reports, Publicly Available Specifications (PAS) and Guides (hereafter referred to as "IEC Publication(s)"). Their preparation is entrusted to technical committees; any IEC National Committee interested in the subject dealt with may participate in this preparatory work. International, governmental and non-governmental organizations liaising with the IEC also participate in this preparation. IEC collaborates closely with the International Organization for Standardization (ISO) in accordance with conditions determined by agreement between the two organizations.
2) The formal decisions or agreements of IEC on technical matters express, as nearly as possible, an international consensus of opinion on the relevant subjects since each technical committee has representation from all interested IEC National Committees.
3) IEC Publications have the form of recommendations for international use and are accepted by IEC National Committees in that sense. While all reasonable efforts are made to ensure that the technical content of IEC Publications is accurate, IEC cannot be held responsible for the way in which they are used or for any misinterpretation by any end user.
4) In order to promote international uniformity, IEC National Committees undertake to apply IEC Publications transparently to the maximum extent possible in their national and regional publications. Any divergence between any IEC Publication and the corresponding national or regional publication shall be clearly indicated in the latter.
5) IEC itself does not provide any attestation of conformity. Independent certification bodies provide conformity assessment services and, in some areas, access to IEC marks of conformity. IEC is not responsible for any services carried out by independent certification bodies.
6) All users should ensure that they have the latest edition of this publication.
7) No liability shall attach to IEC or its directors, employees, servants or agents including individual experts and members of its technical committees and IEC National Committees for any personal injury, property damage or other damage of any nature whatsoever, whether direct or indirect, or for costs (including legal fees) and expenses arising out of the publication, use of, or reliance upon, this IEC Publication or any other IEC Publications.
8) Attention is drawn to the Normative references cited in this publication. Use of the referenced publications is indispensable for the correct application of this publication.
9) Attention is drawn to the possibility that some of the elements of this IEC Publication may be the subject of patent rights. IEC shall not be held responsible for identifying any or all such patent rights.

International Standard IEC 60331-3 has been prepared by IEC technical committee 20: Electric cables.

This bilingual version (2018-11) corresponds to the monolingual English version, published in 2018-03.

This second edition cancels and replaces the first edition published in 2009. It constitutes a technical revision.

The significant technical changes with respect to the previous edition are as follows:

– extension of the scope to include metallic data and telecom cables and optical fibre cables, although details for the specific point of failure, continuity checking arrangement,

AVA Documents Document Sharing Hub

Full document details: IEC 60331-3-2018

test sample, test procedure and test report relevant to metallic data and telecom cables and optical fibre cables are not given by IEC 60331-3;

– improved description of the test environment;
– mandatory use of mass flow meter/controllers as the means of controlling accurately the input flow rates of fuel and air to the burner;
– improved description of the information to be included in the test report.

The text of this International Standard is based on the following documents:

FDIS	Report on voting
20/1782A/FDIS	20/1794/RVD

Full information on the voting for the approval of this International Standard can be found in the report on voting indicated in the above table.

The French version of this document has not been voted upon.

This document has been drafted in accordance with the ISO/IEC Directives, Part 2.

It has the status of a group safety publication in accordance with IEC Guide 104.

A list of all parts of the IEC 60331 series, published under the title: *Tests for electric cables under fire conditions – Circuit integrity*, can be found on the IEC website.

The committee has decided that the contents of this publication will remain unchanged until the stability date indicated on the IEC website under "http://webstore.iec.ch" in the data related to the specific publication. At this date, the publication will be

- reconfirmed,
- withdrawn,
- replaced by a revised edition, or
- amended.

Documents
Document Sharing Hub

Full document details: IEC 60331-3-2018

INTRODUCTION

IEC 60331 consists of the following parts under the general title: *Tests for electric cables under fire conditions – Circuit integrity:*

Part 1: *Test method for fire with shock at a temperature of at least 830 °C for cables of rated voltage up to and including 0,6/1,0 kV and with an overall diameter exceeding 20 mm*

Part 2: *Test method for fire with shock at a temperature of at least 830 °C for cables of rated voltage up to and including 0,6/1,0 kV and with an overall diameter not exceeding 20 mm*

Part 3: *Test method for fire with shock at a temperature of at least 830 °C for cables of rated voltage up to and including 0,6/1,0 kV tested in a metal enclosure*

Part 11: *Apparatus – Fire alone at a flame temperature of at least 750 °C*

Part 21: *Procedures and requirements – Cables of rated voltage up to and including 0,6/1,0 kV*

Part 23: *Procedures and requirements – Electric data cables*

Part 25: *Procedures and requirements – Optical fibre cables*

NOTE 1 Parts 21, 23 and 25 relate to fire-only conditions at a flame temperature of at least 750 °C.

NOTE 2 Parts 11, 21, 23 and 25 are no longer subject to maintenance. IEC 60331 Parts 1 and 2 are the recommended test procedures.

Since its first edition (1970), IEC 60331 has been extended and has introduced a range of test apparatus in order that a test may be carried out on large and small power, control, data and optical fibre cables.

IEC 60331-3 introduces apparatus and a procedure to allow cables to be tested in a metal enclosure under conditions of mechanical shock as well as fire at temperature of at least 830 °C.

Documents
Document Sharing Hub
Full document details: IEC 60331-3-2018

TESTS FOR ELECTRIC CABLES UNDER FIRE CONDITIONS – CIRCUIT INTEGRITY –

Part 3: Test method for fire with shock at a temperature of at least 830 °C for cables of rated voltage up to and including 0,6/1,0 kV tested in a metal enclosure

1 Scope

This part of IEC 60331 specifies the test method for cables which are required to maintain circuit integrity when tested in a metal enclosure and when subject to fire and mechanical shock under specified conditions.

This document is applicable to cables of rated voltage not exceeding 600 V/1 000 V, including those of rated voltage below 80 V, metallic data and telecom cables and optical fibre cables.

It is intended for use when testing cables not greater than 20 mm overall diameter.

This document includes details for the specific point of failure, continuity checking arrangement, test sample, test procedure and test report relevant to electric power and control cables with rated voltage up to and including 600 V/1 000 V. Details for the specific point of failure, continuity checking arrangement, test sample, test procedure and test report relevant to metallic data and telecom cables and optical fibre cables are not given by IEC 60331-3.

Although the scope is restricted to cables with rated voltage up to and including 0,6/1,0 kV, the procedure can be used, with the agreement of the manufacturer and the purchaser, for cables with rated voltage up to and including 1,8/3 (3,3) kV, provided that suitable fuses are used.

It is not assumed that cables successfully assessed by this method, will also pass requirements for either IEC 60331-1 or IEC 60331-2. Testing to either of these two standards is to be carried out separately. Such additional performance can be recognised by the marking in accordance with IEC 60331-1:2018 Clause 11 or IEC 60331-2:2018 Clause 11.

Annex A provides the method of verification of the burner and control system used for the test.

CAUTION – The test given in this standard may involve the use of dangerous voltages and temperatures. Suitable precautions should be taken against the risk of shock, burning, fire and explosion that may be involved, and against any noxious fumes that may be produced.

2 Normative references

The following documents are referred to in the text in such a way that some or all of their content constitutes requirements of this document. For dated references, only the edition cited applies. For undated references, the latest edition of the referenced document (including any amendments) applies.

IEC 60269-3, *Low-voltage fuses – Part 3: Supplementary requirements for fuses for use by unskilled persons (fuses mainly for household and similar applications) – Examples of standardized systems of fuses A to F*

AVA Documents Document Sharing Hub

Full document details: IEC 60331-3-2018

IEC 60331-1:2018, *Test for electric cables under fire conditions – Circuit integrity – Part 1: Test for circuit integrity under conditions of fire with shock at a temperature of at least 830 °C for cables of rated voltage up to and including 0,6/1,0kV and with an overall diameter exceeding 20 mm*

IEC 60331-2:2018, *Test for electric cables under fire conditions – Circuit integrity – Part 2: Test for circuit integrity under conditions of fire with shock at a temperature of at least 830 °C for cables of rated voltage up to and including 0,6/1,0kV and with an overall diameter not exceeding 20 mm*

IEC 60584-1, *Thermocouples – Part 1: EMF specifications and tolerances*

3 Terms and definitions

For the purposes of this document, the following terms and definitions apply.

ISO and IEC maintain terminological databases for use in standardization at the following addresses:

- IEC Electropedia: available at http://www.electropedia.org/
- ISO Online browsing platform: available at http://www.iso.org/obp

3.1
circuit integrity
ability of an electric cable to continue to operate in a designated manner whilst subjected to a specified flame source for a specified period of time under specified conditions

3.2
draught-free environment
space in which the results of tests are not significantly affected by the local air speed

4 Test environment

The test shall be carried out in a draught-free environment within a suitable chamber, of minimum volume 20 m^3, with facilities for disposing of any noxious gases resulting from the burning. Sufficient ventilation shall be available to sustain the flame for the duration of the test. Air inlets and the exhaust chimney should be located in such a way that the burner flame remains stable during the verification procedure and test. If necessary, the burner shall be shielded from any draughts by the use of draught shields. Windows may be installed in the walls of the chamber in order to observe the behaviour of the cable during the test. Fume exhaust should be achieved by means of natural draught through a chimney located at least 1 m from the burner. A damper may be used for adjustment of ventilation conditions.

NOTE Experience has shown a chamber similar to the "3 m cube" specified in IEC 61034-1 to be suitable.

The chamber and test apparatus shall be at a temperature of between 10 °C and 40 °C at the start of each test.

The same ventilation and shielding conditions shall be used in the chamber during both the verification and cable test procedures.

Documents
Document Sharing Hub

Full document details: IEC 60331-3-2018

5 Test apparatus

5.1 Test equipment

The test equipment shall consist of the following:

a) a metal enclosure, through which the test specimen(s) are drawn, constructed from a straight stainless steel tube of circular cross-section as described in 5.2;

b) a test ladder, onto which the metal enclosure is mounted, comprising a steel framework fastened to a rigid support as described in 5.3;

c) a source of heat comprising a horizontally mounted ribbon burner as described in 5.4;

d) a shock-producing device as described in 5.5;

e) a test wall equipped with thermocouples for verification of the source of heat as described in Annex A;

f) a continuity checking arrangement as described in 5.7;

g) fuses as described in 5.8.

A general arrangement of the test equipment is shown in Figure 1, Figure 2, Figure 3 and Figure 4.

5.2 Metal enclosure

5.2.1 Material and dimensions

The enclosure shall comprise a straight stainless steel tube of circular cross-section, manufactured free from surface irregularities. The metal enclosure shall be (1 300 ± 50) mm long and shall conform to dimensions as detailed in Table 1.

NOTE 1 Metal conduit as defined in IEC 60614-2-1:1982 has been found to be suitable for the enclosure.

NOTE 2 AISI grades 304 and 316 have been found to be suitable materials for the enclosure.

Table 1 – Enclosure dimensions

Size mm	**Wall thickness** mm
20	1,6 ± 0,15
40	1,6 ± 0,15

5.2.2 Metal enclosure selection

The particular metal enclosure shall be selected using the criteria given in 6.2.

5.3 Test ladder and mounting

The test ladder shall consist of a steel framework as shown in Figure 1. The vertical elements of the ladder shall be fixed at (400 ± 20) mm spacing. The test ladder shall be (1 200 ± 100) mm long and (600 ± 50) mm high, and the total mass of the test ladder shall be (18 ± 1) kg. Ballast, if required, shall be placed on the steel supports.

NOTE 1 Angle iron approximately 45 mm wide and 6 mm thick, with suitable slots cut to allow for fixing of the bolts or saddles, has been found to be a suitable material for construction of the ladder.

Documents
Document Sharing Hub
Full document details: IEC 60331-3-2018

The metal enclosure shall be rigidly mounted centrally on the test ladder, as shown in Figure 2. Suitably sized saddles or U-bolts are recommended for fixing on the vertical elements.

NOTE 2 It is important that the fixings are tight enough to prevent vertical movement of the metal enclosure whilst allowing longitudinal expansion of the metal enclosure.

Each horizontal element shall have a mounting hole not more than 200 mm from each end, the exact position and diameter being determined by the particular supporting bush and supporting framework used. The test ladder shall be fastened to a rigid support by four bonded rubber bushes of hardness 50–60 Shore A fitted between the horizontal steel elements of the ladder and the support framework, as shown in Figure 1 and Figure 3, so as to allow movement under impact.

NOTE 3 A typical rubber bush, which has been found to be suitable, is shown in Figure 5.

Documents
Document Sharing Hub

Full document details: IEC 60331-3-2018

Dimensions in millimetres

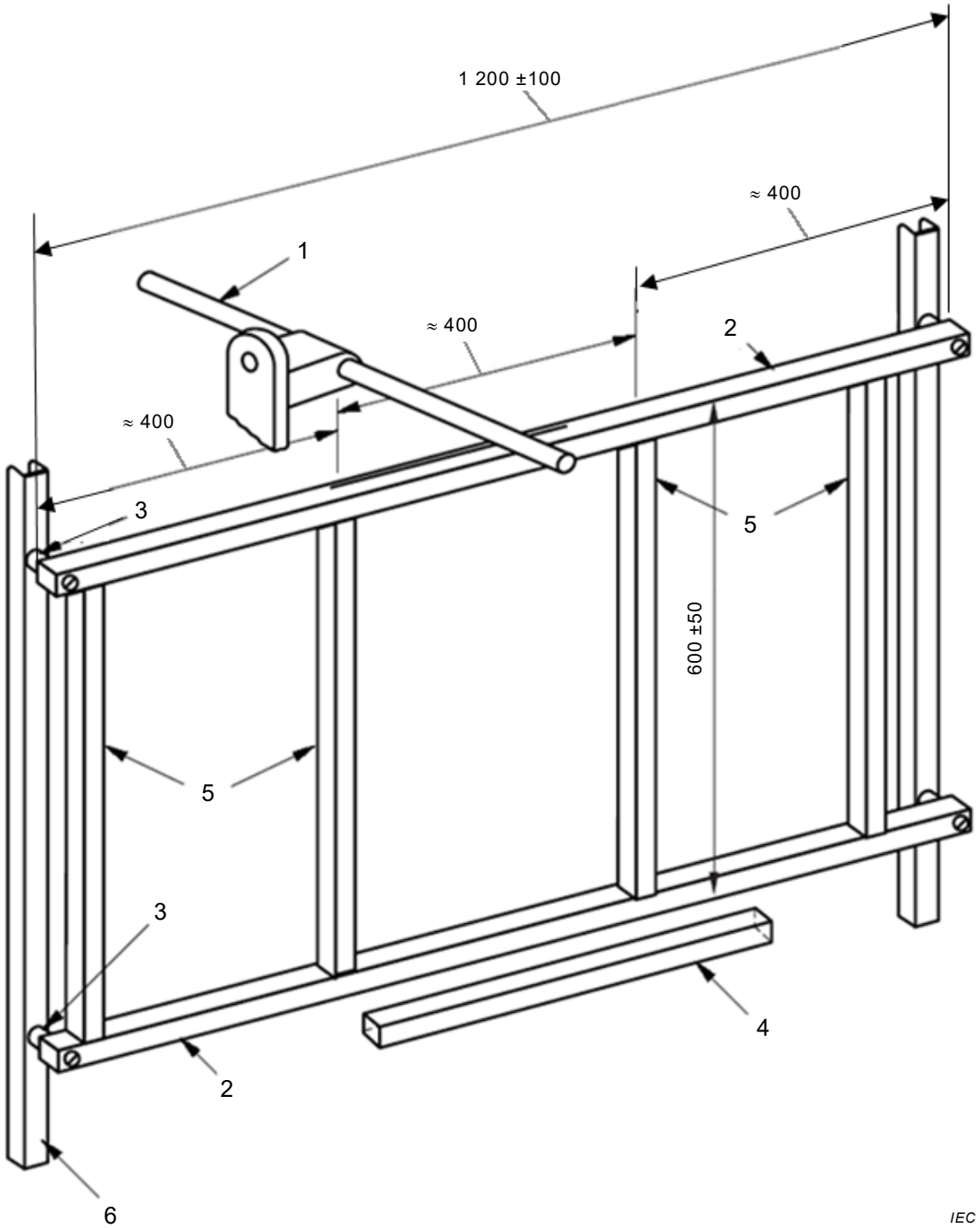

Key

1	shock-producing device	4	ribbon gas burner
2	steel ladder	5	fixed vertical element
3	rubber bush	6	ladder support

Figure 1 – Schematic diagram of test configuration

Documents
Document Sharing Hub
Full document details: IEC 60331-3-2018

Dimensions in millimetres
(dimensions are approximate)

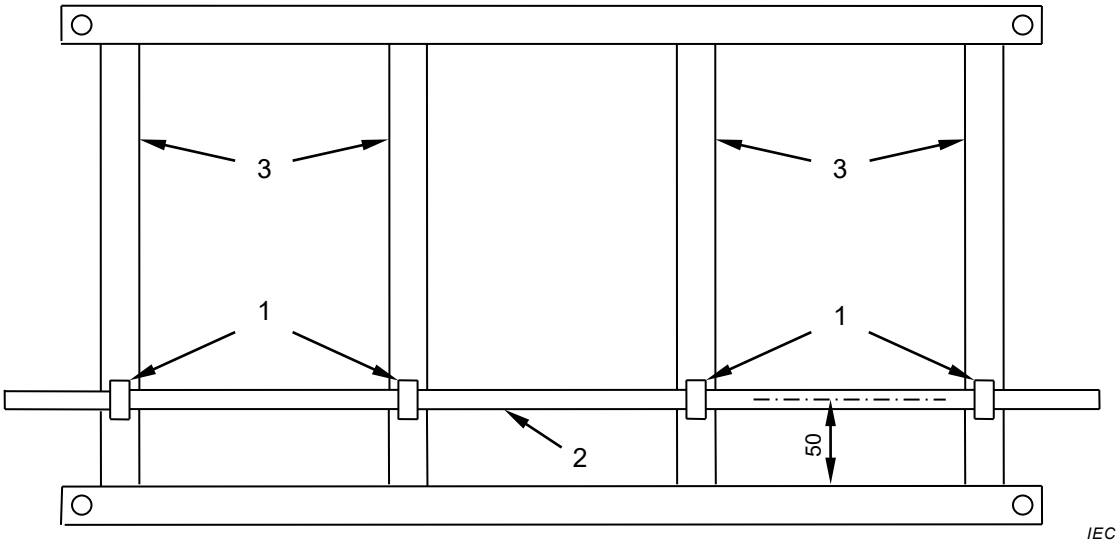

Key

1 U-bolt

2 metal enclosure

3 fixed vertical elements

Figure 2 – Recommended method of mounting the metal enclosure to the test ladder

Documents
Document Sharing Hub
Full document details: IEC 60331-3-2018

Dimensions in millimetres

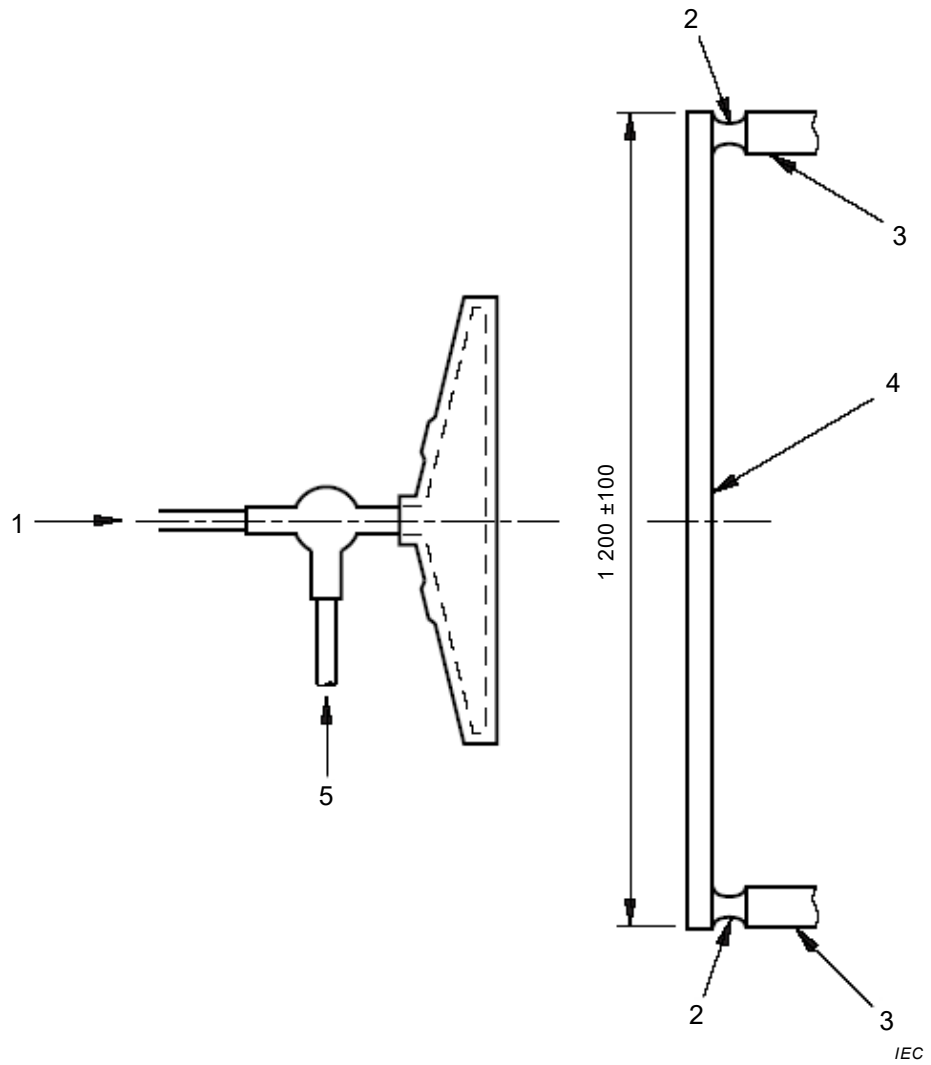

Key

1	entry for air	4	horizontal steel test ladder
2	rubber bush	5	entry for propane gas
3	support framework		

Figure 3 – Plan view of fire test equipment

Documents
Document Sharing Hub
Full document details: IEC 60331-3-2018

Dimensions in millimetres

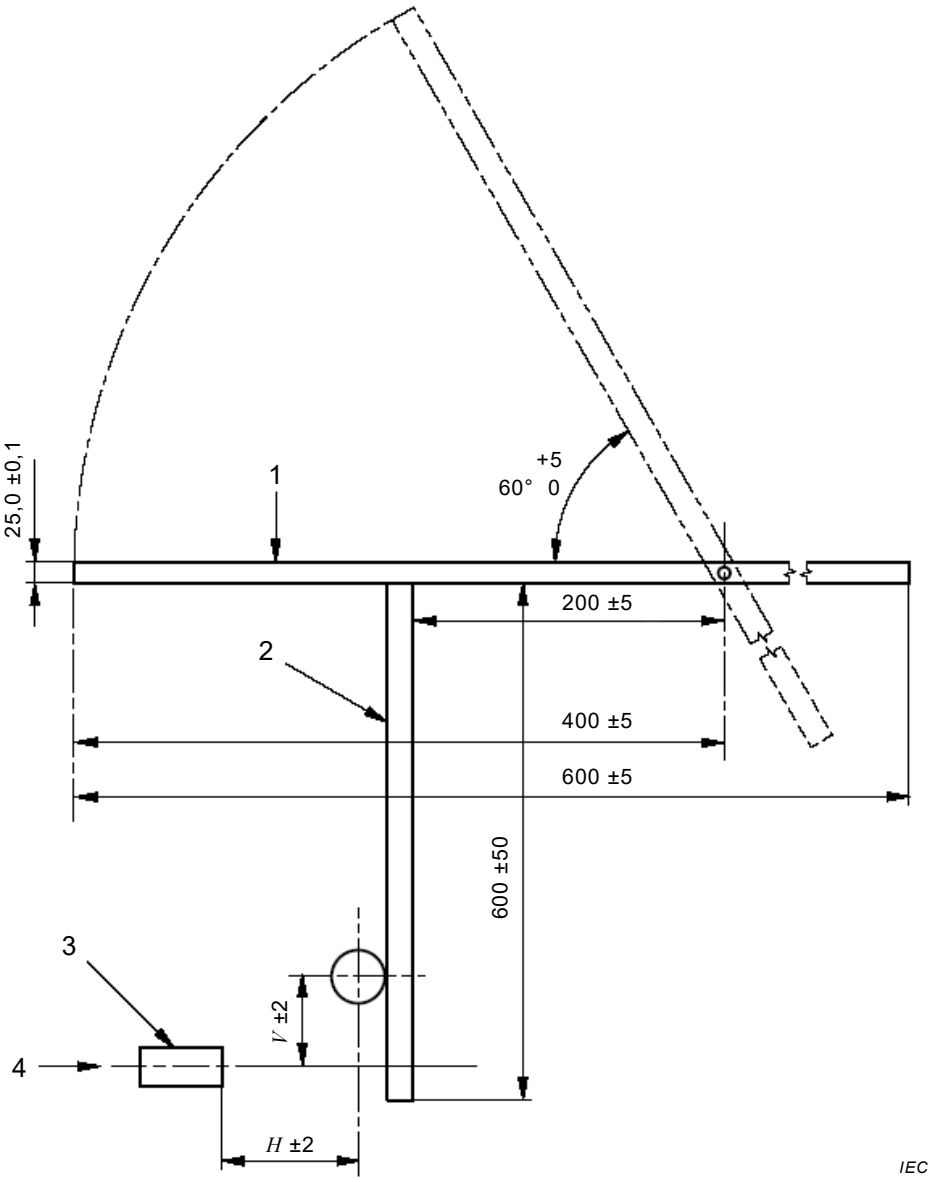

Key

1	shock-producing device	*H*	horizontal distance of metal enclosure centre line from burner face
2	steel test ladder	*V*	vertical distance of metal enclosure centre line from centre line of burner
3	gas burner		
4	centre line of burner face		

Figure 4 – End elevation of fire test equipment
(not to scale)

Documents
Document Sharing Hub
Full document details: IEC 60331-3-2018

Dimensions in millimetres

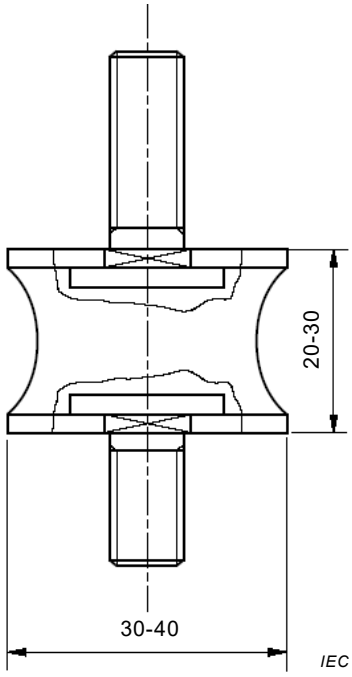

Figure 5 – Typical rubber bush for supporting the test ladder

5.4 Source of heat

5.4.1 Burner

The source of heat shall be a ribbon type propane gas burner with a nominal burner face length of 500 mm (outer distance between outer holes) with a venturi mixer. The nominal burner face width shall be 10 mm. The face of the burner shall have three staggered rows of drilled holes, nominally 1,32 mm in diameter and drilled at centres 3,2 mm from one another, as shown in Figure 6.

A centre-feed burner is recommended.

A row of small holes milled on each side of the burner plate, to serve as pilot holes for keeping the flame burning, is permitted.

Guidance on the choice of a recommended burner system is given in Annex B.

Documents
Document Sharing Hub
Full document details: IEC 60331-3-2018