IEC 60332-3-10

Edition 2.0 2018-07
REDLINE VERSION

INTERNATIONAL STANDARD

colour inside

GROUP SAFETY PUBLICATION

Tests on electric and optical fibre cables under fire conditions – Part 3-10: Test for vertical flame spread of vertically-mounted bunched wires or cables – Apparatus

IEC 60332-3-10:2018-07 RLV(en)

Documents
Document Sharing Hub

Full document details: IEC 60332-3-10 2018 RLV

THIS PUBLICATION IS COPYRIGHT PROTECTED
Copyright © 2018 IEC, Geneva, Switzerland

All rights reserved. Unless otherwise specified, no part of this publication may be reproduced or utilized in any form or by any means, electronic or mechanical, including photocopying and microfilm, without permission in writing from either IEC or IEC's member National Committee in the country of the requester. If you have any questions about IEC copyright or have an enquiry about obtaining additional rights to this publication, please contact the address below or your local IEC member National Committee for further information.

IEC Central Office
3, rue de Varembé
CH-1211 Geneva 20
Switzerland

Tel.: +41 22 919 02 11
info@iec.ch
www.iec.ch

About the IEC
The International Electrotechnical Commission (IEC) is the leading global organization that prepares and publishes International Standards for all electrical, electronic and related technologies.

About IEC publications
The technical content of IEC publications is kept under constant review by the IEC. Please make sure that you have the latest edition, a corrigenda or an amendment might have been published.

IEC Catalogue - webstore.iec.ch/catalogue
The stand-alone application for consulting the entire bibliographical information on IEC International Standards, Technical Specifications, Technical Reports and other documents. Available for PC, Mac OS, Android Tablets and iPad.

IEC publications search - webstore.iec.ch/advsearchform
The advanced search enables to find IEC publications by a variety of criteria (reference number, text, technical committee,…). It also gives information on projects, replaced and withdrawn publications.

IEC Just Published - webstore.iec.ch/justpublished
Stay up to date on all new IEC publications. Just Published details all new publications released. Available online and also once a month by email.

Electropedia - www.electropedia.org
The world's leading online dictionary of electronic and electrical terms containing 21 000 terms and definitions in English and French, with equivalent terms in 16 additional languages. Also known as the International Electrotechnical Vocabulary (IEV) online.

IEC Glossary - std.iec.ch/glossary
67 000 electrotechnical terminology entries in English and French extracted from the Terms and Definitions clause of IEC publications issued since 2002. Some entries have been collected from earlier publications of IEC TC 37, 77, 86 and CISPR.

IEC Customer Service Centre - webstore.iec.ch/csc
If you wish to give us your feedback on this publication or need further assistance, please contact the Customer Service Centre: sales@iec.ch.

Documents
Document Sharing Hub

Full document details: IEC 60332-3-10 2018 RLV

IEC 60332-3-10

Edition 2.0 2018-07
REDLINE VERSION

INTERNATIONAL STANDARD

colour inside

GROUP SAFETY PUBLICATION

Tests on electric and optical fibre cables under fire conditions – Part 3-10: Test for vertical flame spread of vertically-mounted bunched wires or cables – Apparatus

INTERNATIONAL
ELECTROTECHNICAL
COMMISSION

ICS 13.220.40; 29.060.20

ISBN 978-2-8322-5876-7

Warning! Make sure that you obtained this publication from an authorized distributor.

® Registered trademark of the International Electrotechnical Commission

Documents
Document Sharing Hub

Full document details: IEC 60332-3-10 2018 RLV

CONTENTS

FOREWORD 3
INTRODUCTION 5
1 Scope 6
2 Normative references 6
3 Terms and definitions 6
4 Test environment 7
5 Test apparatus 7
5.1 Test chamber 7
5.2 Air supply 7
5.3 Ladder types 8
5.4 Effluent cleaning attachment 8
6 Ignition source 8
6.1 Type 8
6.2 Positioning 9
Annex A (informative) Details of recommended burner and mass flowmeters 18
Annex B (informative) Flowmeter calibration correction factors 19
B.1 General 19
B.2 Example 19
B.2.1 General 19
B.2.2 Air supplied at 1 bar 20
B.2.3 Air supplied at 2,4 bar 20
Bibliography 22

Figure 1 – Test chamber 11
Figure 2 – Thermal insulation of back and sides of the test chamber 12
Figure 3 – Positioning of burner and typical arrangement of test sample on ladder 13
Figure 4 – Tubular steel ladders for cable test 14
Figure 5 – Burner configurations 15
Figure 6 – Arrangement of holes for burners 16
Figure 7 – ~~Example of~~ Schematic diagram of an example of a burner control system~~s~~ using rotameters 17

Documents
Document Sharing Hub
Full document details: IEC 60332-3-10 2018 RLV

INTERNATIONAL ELECTROTECHNICAL COMMISSION

_____

TESTS ON ELECTRIC AND OPTICAL FIBRE CABLES UNDER FIRE CONDITIONS –

Part 3-10: Test for vertical flame spread of vertically-mounted bunched wires or cables – Apparatus

FOREWORD

1) The International Electrotechnical Commission (IEC) is a worldwide organization for standardization comprising all national electrotechnical committees (IEC National Committees). The object of IEC is to promote international co-operation on all questions concerning standardization in the electrical and electronic fields. To this end and in addition to other activities, IEC publishes International Standards, Technical Specifications, Technical Reports, Publicly Available Specifications (PAS) and Guides (hereafter referred to as "IEC Publication(s)"). Their preparation is entrusted to technical committees; any IEC National Committee interested in the subject dealt with may participate in this preparatory work. International, governmental and non-governmental organizations liaising with the IEC also participate in this preparation. IEC collaborates closely with the International Organization for Standardization (ISO) in accordance with conditions determined by agreement between the two organizations.
2) The formal decisions or agreements of IEC on technical matters express, as nearly as possible, an international consensus of opinion on the relevant subjects since each technical committee has representation from all interested IEC National Committees.
3) IEC Publications have the form of recommendations for international use and are accepted by IEC National Committees in that sense. While all reasonable efforts are made to ensure that the technical content of IEC Publications is accurate, IEC cannot be held responsible for the way in which they are used or for any misinterpretation by any end user.
4) In order to promote international uniformity, IEC National Committees undertake to apply IEC Publications transparently to the maximum extent possible in their national and regional publications. Any divergence between any IEC Publication and the corresponding national or regional publication shall be clearly indicated in the latter.
5) IEC itself does not provide any attestation of conformity. Independent certification bodies provide conformity assessment services and, in some areas, access to IEC marks of conformity. IEC is not responsible for any services carried out by independent certification bodies.
6) All users should ensure that they have the latest edition of this publication.
7) No liability shall attach to IEC or its directors, employees, servants or agents including individual experts and members of its technical committees and IEC National Committees for any personal injury, property damage or other damage of any nature whatsoever, whether direct or indirect, or for costs (including legal fees) and expenses arising out of the publication, use of, or reliance upon, this IEC Publication or any other IEC Publications.
8) Attention is drawn to the Normative references cited in this publication. Use of the referenced publications is indispensable for the correct application of this publication.
9) Attention is drawn to the possibility that some of the elements of this IEC Publication may be the subject of patent rights. IEC shall not be held responsible for identifying any or all such patent rights.

This redline version of the official IEC Standard allows the user to identify the changes made to the previous edition. A vertical bar appears in the margin wherever a change has been made. Additions are in green text, deletions are in strikethrough red text.

Documents
Document Sharing Hub

Full document details: IEC 60332-3-10 2018 RLV

International Standard IEC 60332-3-10 has been prepared by IEC technical committee 20: Electric cables.

This second edition cancels and replaces the first edition published in 2000 and Amendment 1:2008. This edition constitutes a technical revision.

This edition includes the following significant technical changes with respect to the previous edition:

a) adjustments have been made to the title, and elsewhere, to emphasise the standard is applicable to optical fibre cables as well as metallic conductor types;

b) details of the way in which cables are mounted on the ladder have been better defined in order to improve repeatability and reproducibility;

c) the connection of the venturi mixer to the burner is better defined.

It has the status of a group safety publication in accordance with IEC Guide 104.

The text of this International Standard is based on the following documents:

FDIS	Report on voting
20/1797/FDIS	20/1814/RVD

Full information on the voting for the approval of this International Standard can be found in the report on voting indicated in the above table.

This document has been drafted in accordance with the ISO/IEC Directives, Part 2.

A list of all parts in the IEC 60332 series, published under the general title *Tests on electric and optical fibre cables under fire conditions*, can be found on the IEC website.

Future standards in this series will carry the new general title as cited above. Titles of existing standards in this series will be updated at the time of the next edition.

The committee has decided that the contents of this publication will remain unchanged until the stability date indicated on the IEC website under "http://webstore.iec.ch" in the data related to the specific publication. At this date, the publication will be

- reconfirmed,
- withdrawn,
- replaced by a revised edition, or
- amended.

The contents of the corrigendum of October 2018 have been included in this copy.

IMPORTANT – The “colour inside” logo on the cover page of this publication indicates that it contains colours which are considered to be useful for the correct understanding of its contents. Users should therefore print this publication using a colour printer.

Documents
Document Sharing Hub

Full document details: IEC 60332-3-10 2018 RLV

INTRODUCTION

IEC 60332-3-10 is part of a series of publications dealing with tests on electric and optical fibre cables under fire conditions.

The IEC 60332-1 and IEC 60332-2 series specify methods of test for flame spread characteristics for a single vertical insulated wire or cable. It cannot be assumed that, because a wire or cable meets the requirements of the IEC 60332-1 and IEC 60332-2 series, a vertical bunch of similar cables or wires will behave in a similar manner. This is because flame spread along a vertical bunch of cables depends on a number of features, such as

a) the volume of combustible material exposed to the fire and to any flame which may be produced by the combustion of the cables;

b) the geometrical configuration of the cables and their relationship to an enclosure;

c) the temperature at which it is possible to ignite the gases emitted from the cables;

d) the quantity of combustible gas released from the cables for a given temperature rise;

e) the volume of air passing through the cable installation;

f) the construction of the cable, for example armoured or unarmoured, multi- or single-core.

All of the foregoing assume that the cables are able to be ignited when involved in an external fire.

The IEC 60332-3 series gives details of a test where a number of cables are bunched together to form various test sample installations. For easier use and differentiation of various test categories, the parts are designated as follows:

Part 3-10: Apparatus

Part 3-21: Category A F/R

Part 3-22: Category A

Part 3-23: Category B

Part 3-24: Category C

Part 3-25: Category D

Parts from 3-21 onwards define the various categories and the relevant procedures. The categories are distinguished by test duration, the volume of non-metallic material of the test sample and the method of mounting the sample for the test. In all categories, cables having at least one conductor of cross-sectional area greater than 35 mm^2 are tested in a spaced configuration, whereas cables of conductor cross-sectional area of 35 mm^2 or smaller and optical fibre cables are tested in a touching configuration.

The categories are not necessarily related to different safety levels in actual cable installations. The actual installed configuration of the cables may be a major determinant in the level of flame spread occurring in an actual fire.

The method of mounting described as category A F/R (Part 3-21) is intended for special cable designs used in particular installations.

Categories A, B, C and D (Part 3-22 to Part 3-25 respectively) are for general use where different non-metallic volumes are applicable.

~~Additional categories, especially to cover the use of small diameter communication cables in closely bunched configurations, will be further considered when more data are available.~~

Documents
Document Sharing Hub

Full document details: IEC 60332-3-10 2018 RLV

TESTS ON ELECTRIC AND OPTICAL FIBRE CABLES UNDER FIRE CONDITIONS –

Part 3-10: Test for vertical flame spread of vertically-mounted bunched wires or cables – Apparatus

1 Scope

~~The series of International Standards covered by Parts 3-10, 3-21, 3-22, 3-23, 3-24 and 3-25~~ This part of IEC 60332 ~~specifies~~ details the apparatus and its arrangement and calibration for methods of test for the assessment of vertical flame spread of vertically-mounted bunched wires or cables, electrical or optical, under defined conditions.

NOTE For the purpose of this document the term "electric wire or cable" covers all insulated metallic conductor cables used for the conveyance of energy or signals.

2 Normative references

~~The following normative documents contain provisions which, through reference in this text, constitute provisions of this part of IEC 60332. For dated references, subsequent amendments to, or revisions of, any of these publications do not apply. However, parties to agreements based on this part of IEC 60332 are encouraged to investigate the possibility of applying the most recent editions of the normative documents indicated below. For undated references, the latest edition of the normative document referred to applies. Members of IEC and ISO maintain registers of currently valid International Standards.~~

~~IEC 60695-4, *Fire hazard testing – Part 4: Terminology concerning fire tests*~~

~~IEC Guide 104, *The preparation of safety publications and the use of basic safety publications and group safety publications*~~

There are no normative references in this document.

3 Terms and definitions

For the purposes of this document, the following terms and definitions apply. ~~The definition is taken from IEC 60695-4.~~

ISO and IEC maintain terminological databases for use in standardization at the following addresses:

- IEC Electropedia: available at http://www.electropedia.org/
- ISO Online browsing platform: available at http://www.iso.org/obp

3.1
ignition source
source of energy that initiates combustion

[SOURCE: ISO 13943:2017, 3.219]

Documents
Document Sharing Hub

Full document details: IEC 60332-3-10 2018 RLV

4 Test environment

The test shall not be carried out if the external wind speed, measured by an anemometer fitted on the top of the test rig, is greater than 8 m/s and shall not be carried out if the temperature of the inside walls is below 5 °C or above 40 °C measured at a point approximately 1 500 mm above floor level, 50 mm from a side wall, and 1 000 mm from the door. The enclosure door shall be closed throughout the test.

5 Test apparatus

The test apparatus consists of the following.

5.1 Test chamber

The test rig (see Figures 1a) and 1b)) shall comprise a vertical test chamber having a width of (1 000 ± 100) mm, a depth of (2 000 ± 100) mm and a height of (4 000 ± 100) mm; the floor of the chamber shall be raised above ground level. The test chamber shall be nominally airtight along its sides, air being admitted at the base of the test chamber through an aperture of (800 ± 20) mm × (400 ± 10) mm situated (150 ± 10) mm from the front wall of the test chamber (see Figure 1).

An outlet (300 ± 30) mm x (1 000 ± 100) mm shall be made at the rear edge of the top of the test chamber. The back and sides of the test chamber shall be thermally insulated to give a coefficient of heat transfer of approximately 0,7 $W \cdot m^{-2} \cdot K^{-1}$. For example, a steel plate 1,5 mm to 2,0 mm thick covered with 65 mm of mineral wool with a suitable external cladding is satisfactory (see Figure 2). The distance between the ladder and the rear wall of the chamber is (150 ± 10) mm, and between the bottom rung of the ladder and the floor (400 ± 5) mm. The clearance between the lowest point of the test piece and the floor is approximately 100 mm (see Figure 3).

5.2 Air supply

A means of supplying a controlled air flow through the chamber shall be fitted.

~~NOTE 1 It is recommended that the air should be blown into the test chamber, via the air inlet, using a suitable fan.~~

Air shall be introduced into the test chamber through a box fitted directly underneath, and of approximately the same dimensions as the air inlet aperture. Air shall be blown into the box from a suitable fan through a straight section of duct which shall enter from the rear of the test chamber and be parallel to the floor and along the burner centre line as shown in Figure 1b). The duct shall be arranged to allow air into the box through an opening in the longest side.

A grille may be placed over the air inlet aperture to facilitate accessing the test chamber but should neither restrict the airflow nor modify its direction.

A duct of constant cross-section of approximately 240 cm^2 and minimum length of 60 cm is recommended.

Prior to burner ignition, the air flow shall be adjusted to a rate of (5 000 ± 500) l/min at a constant controlled temperature of (20 ± 10) °C and at atmospheric pressure and measured at the inlet side before the test commences. This air flow rate shall be maintained throughout the test until cable burning or glowing has ceased or for a maximum time of 1 h from completion of the test flame application period, after which period the flame or glowing shall be extinguished.

Documents
Document Sharing Hub
Full document details: IEC 60332-3-10 2018 RLV

~~NOTE 2~~ In order to remove noxious gases, it is recommended to maintain the air flow for some minutes after the end of the test, before entering the test chamber.

5.3 Ladder types

There are two types of tubular steel ladder: a standard ladder of (500 ± 5) mm width and a wide ladder of (800 ± 10) mm width. Details of the types of ladder are given in Figures 4a) and 4b).

5.4 Effluent cleaning attachment

Legal requirements may make it necessary for equipment for collecting and washing the effluent to be fitted to the test chamber. This equipment shall not cause a change in the air flow rate through the test chamber.

6 Ignition source

6.1 Type

As required by the test procedure the ignition source shall be one or two ribbon-type propane gas burners complete with venturi mixer, and their own set of flowmeters.

The distance between venturi mixer and burner shall be at least 150 mm. The inner diameter of the tubing (piping or braided flexible hose) between venturi mixer and burner shall be at least equal to the 20 mm inner diameter of the outlet of the venturi mixer.

It is recommended that the distance between venturi mixer and burner does not exceed 900 mm.

Bends between venturi mixer and burner should be minimized.

The propane gas shall be technical grade propane of nominal 95 % purity. The flame-producing surface of the burner(s) shall consist of a flat metal plate through which 242 holes of 1,32 mm in diameter are drilled on 3,2 mm centres in three staggered rows of 81, 80 and 81 holes each to form an array having the nominal dimensions 257 mm × 4,5 mm. As the burner plate may be drilled without the use of a drilling jig, the spacing of the holes may vary slightly. Additionally, a row of small holes may be milled on each side of the burner plate to serve as pilot holes with the function of keeping the flame burning.

The burners are shown in Figures 5a) and 5b), and the placement of the holes in Figure 6.

~~NOTE 1~~ To ensure reproducibility between results from different testing stations, a burner, which is readily available, is recommended for use. For details, see Annex A.

Each burner shall be individually fitted with an accurate means of controlling the propane gas and air input flow rates, either by means of a rotameter-type flowmeter or mass flowmeter.

~~NOTE 2~~ Mass flowmeters are recommended for ease of use.

Figure 7 shows an example of a rotameter-type system.

~~SAFETY NOTE~~ WARNING – The following precautions are recommended to ensure safe operation of the ignition source:

– the gas supply system should be equipped with flashback arresters;

– a flame failure protection device should be used;

– safe sequencing of the propane and air supply should be employed during ignition and extinguishing.

AVA Documents
Document Sharing Hub

Full document details: IEC 60332-3-10 2018 RLV

The calibration of the propane gas and air rotameter-type flowmeters shall be checked after installation to ensure that the pipework and venturi mixer have not affected the calibration.

Corrections for the variations in temperature and pressure from that specified on the propane gas and air rotameter-type flowmeters shall be applied when necessary, see Annex B.

Propane gas and air rotameter-type flowmeters shall be calibrated according to the following reference conditions.

Reference temperature and pressure are 20 °C and 1 bar (100 kPa).

For the purposes of this test, the air shall have a dew-point not higher than 0 °C.

The flow rates ~~at reference conditions (1 bar and 20 °C)~~ for the test shall be as follows:

Air (77,7 ± 4,8) l/min at reference conditions (1 bar and 20°C) or (1550 ± 95) mg/s;

Propane (13,5 ± 0,5) l/min at reference conditions (1 bar and 20°C) or (442 ± 11) mg/s;

to provide a nominal ~~(73,7 ± 1,68) × 10^6 J/h ((70 000 ± 1 600) Btu/h)[1)]~~ 73,7 x 10^6 J/h (20,5 kW)[2] to each burner.

~~NOTE 3 The net heat of combustion is used to calculate the propane flow rate.~~

6.2 Positioning

For the test, the burner shall be arranged horizontally at a distance of (75 ± 5) mm from the front surface of the cable sample, (630 ± 5) mm above the floor of the test chamber and approximately symmetrical with the axis of the ladder. The point of application of the burner flame shall lie ~~in the centre~~ between two cross-bars on the ladder ~~and at least 500 mm above the lower end of the sample~~ (see Figure 2 and Figure 3 ~~and figure 5a~~).

Adjustment of air and gas flows prior to the test may be carried out away from the test position.

Where two burners are used in combination with the wide ladder, they shall be arranged so as to be approximately symmetrical with the axis of the ladder, as shown in Figure 5b). The burner system shall be positioned such that the centre line of the burner system is approximately coincident with the centre of the ladder.

~~1) This is also equivalent to (20,5 ± 0,5) kW.~~

2 A net heat of combustion of 46,4 kJ/g is used to calculate the propane flow rate.

Documents
Document Sharing Hub

Full document details: IEC 60332-3-10 2018 RLV

Dimensions in millimetres

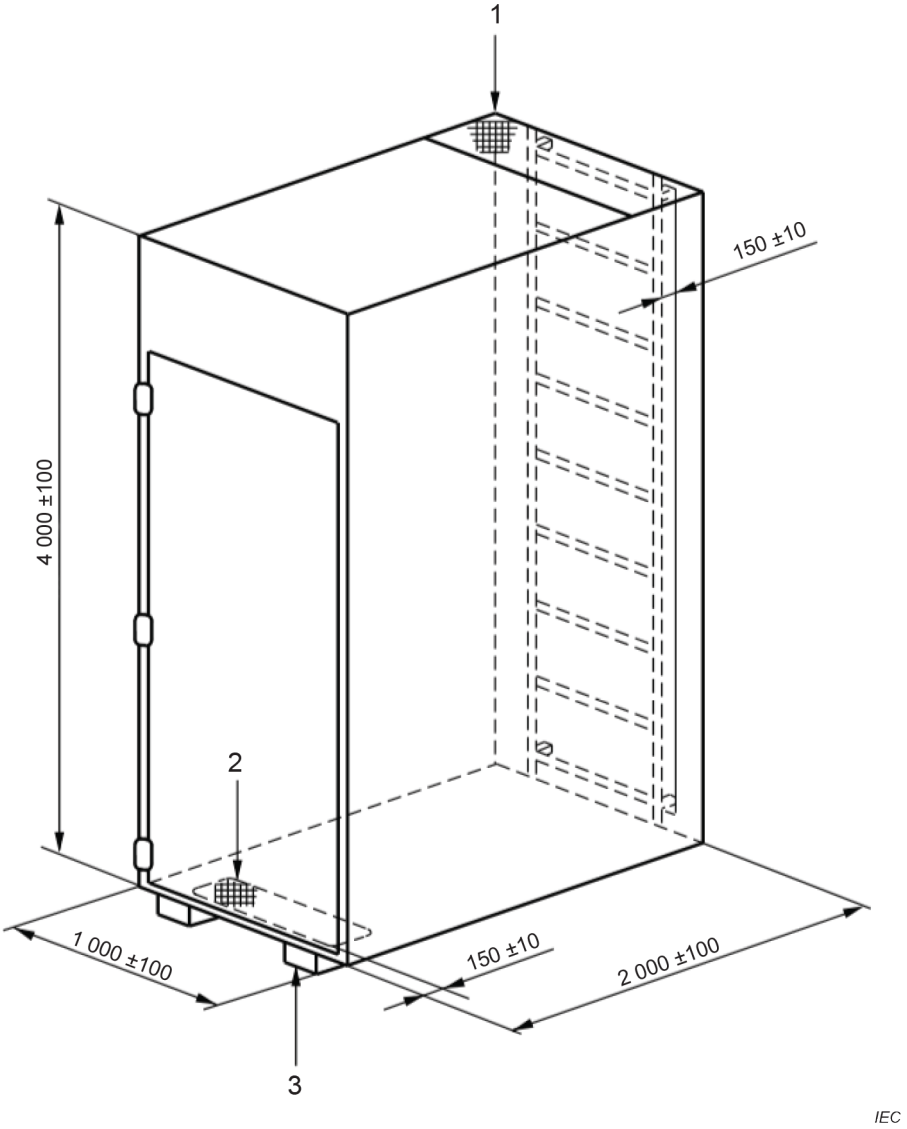

Key

1 smoke outlet (300 ± 30) × (1 000 ± 100)

2 air inlet (800 ± 20) × (400 ± 10)

3 rig raised above ground level

a) Test chamber

Documents
Document Sharing Hub
Full document details: IEC 60332-3-10 2018 RLV

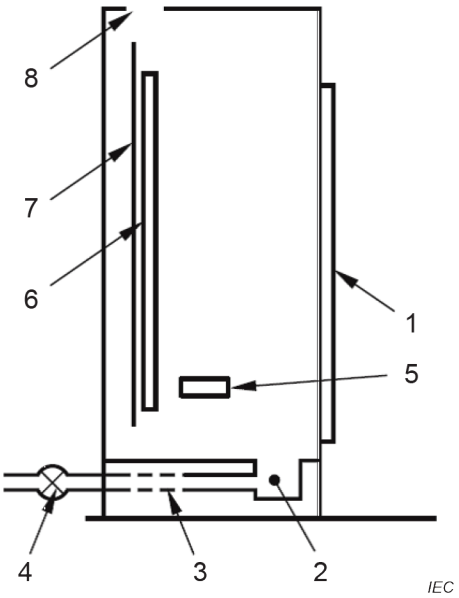

Key

1	door	5	burner
2	air inlet box	6	cables tested
3	air inlet duct	7	ladder
4	fan (illustrative position)	8	smoke outlet

b) Schematic side elevation of test chamber and air inlet arrangement

Figure 1 – Test chamber

Documents
Document Sharing Hub
Full document details: IEC 60332-3-10 2018 RLV

Dimensions in millimetres

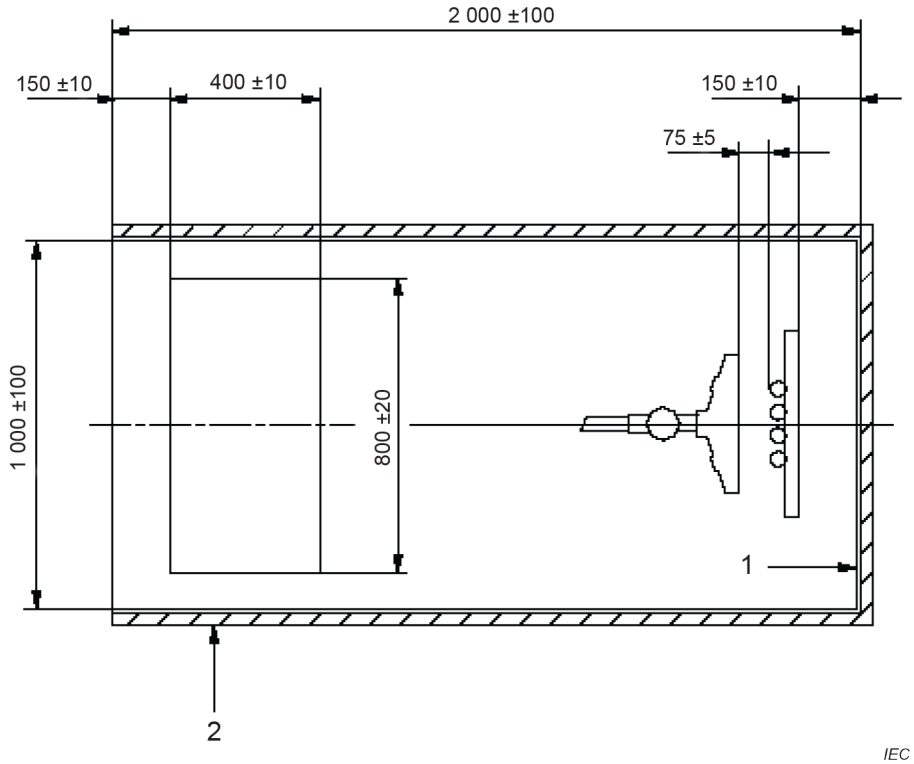

Key

1 steel plate, 1,5 mm to 2 mm thick

2 thermal insulation of mineral wool approximately 65 mm thick with suitable external cladding to give a coefficient of heat transfer of approximately 0,7 W × m^{-2} × K^{-1}

Figure 2 – Thermal insulation of back and sides of the test chamber

Documents
Document Sharing Hub
Full document details: IEC 60332-3-10 2018 RLV

Dimensions in millimetres
(Dimensions are approximate except where toleranced)

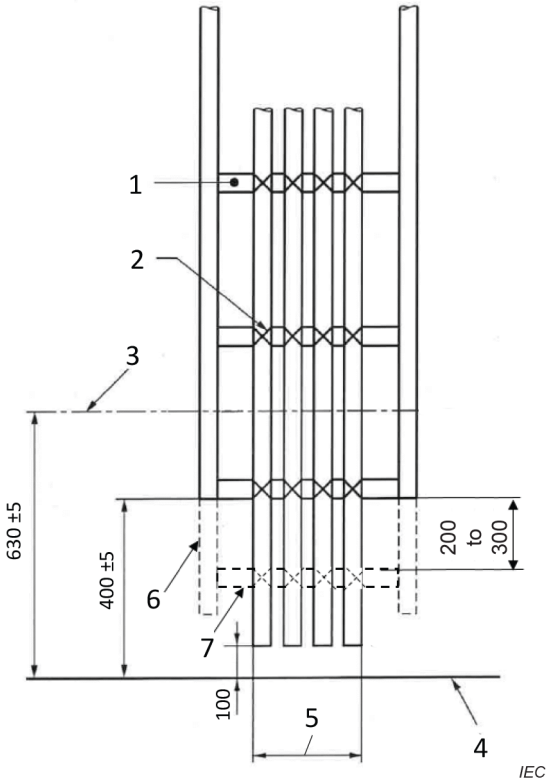

Key

1	round steel rungs	5	maximum width (according to test category)
2	metal wire ties	6	optional extensions of the steel legs
3	centre line of burner	7	optional steel rung
4	floor		

Figure 3 – Positioning of burner and typical arrangement of test sample on ladder

Documents
Document Sharing Hub
Full document details: IEC 60332-3-10 2018 RLV

Dimensions in millimetres

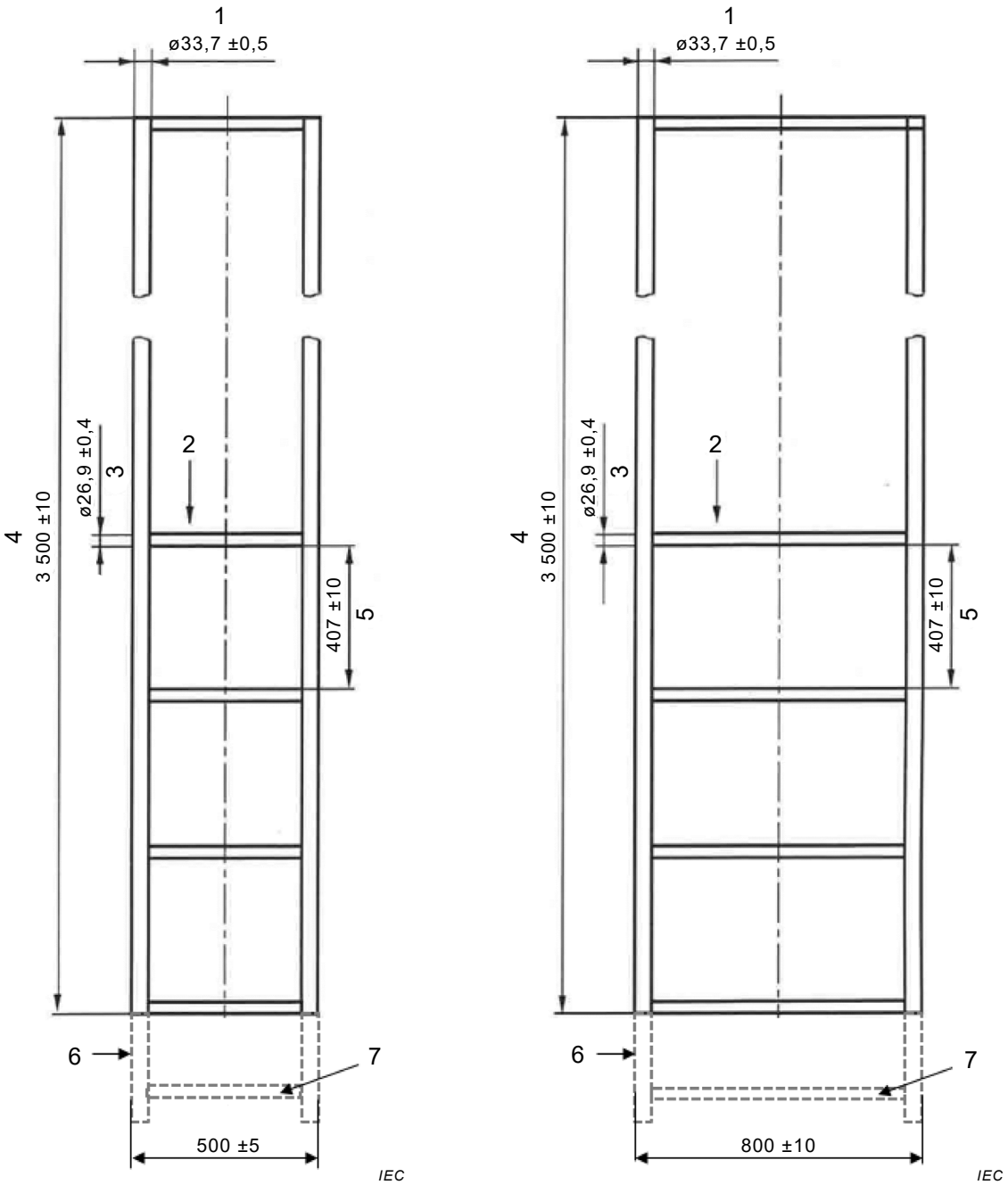

a) Standard ladder **b) Wide ladder**

Key

1	diameter of upright	5	distance between rungs
2	number of rungs = 9	6	optional extensions of steel legs
3	diameter of rungs	7	optional steel rung
4	total height of ladder		

Figure 4 – Tubular steel ladders for cable test

Documents
Document Sharing Hub
Full document details: IEC 60332-3-10 2018 RLV

Dimensions in millimetres

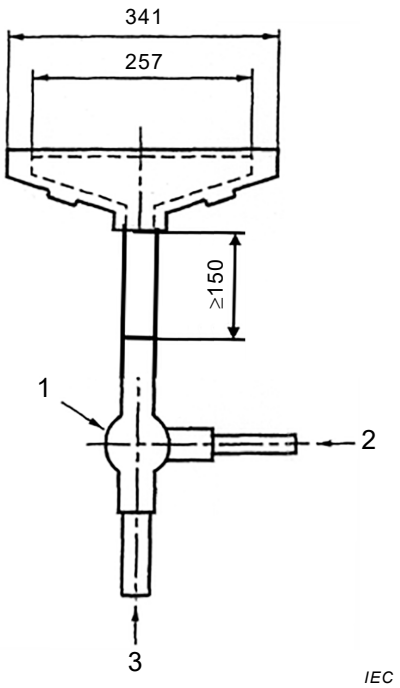

a) Single burner for use with standard ladder

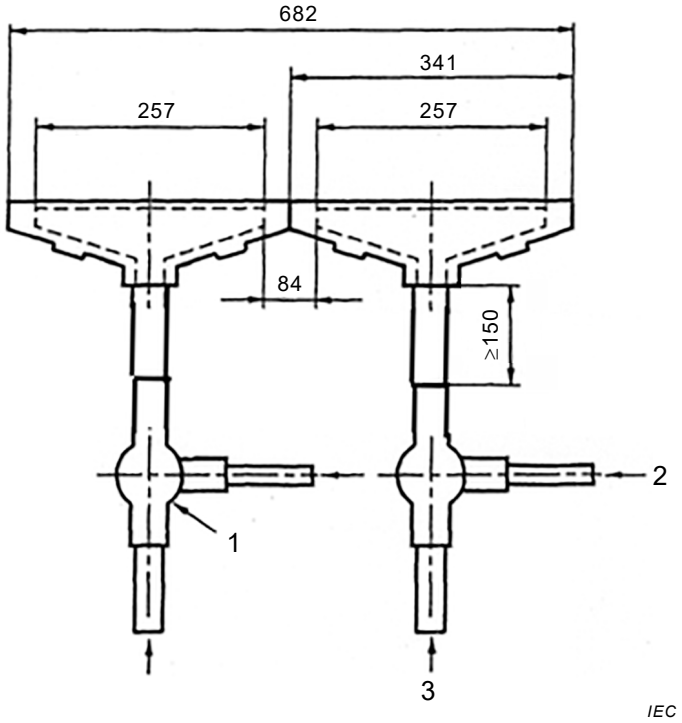

b) Two burner in combination for use with wide ladder

Key

1 venturi air-gas mixer
2 propane gas entry
3 compressed air entry

Figure 5 – Burner configurations

Documents
Document Sharing Hub
Full document details: IEC 60332-3-10 2018 RLV

Dimensions in millimetres (approximate values)

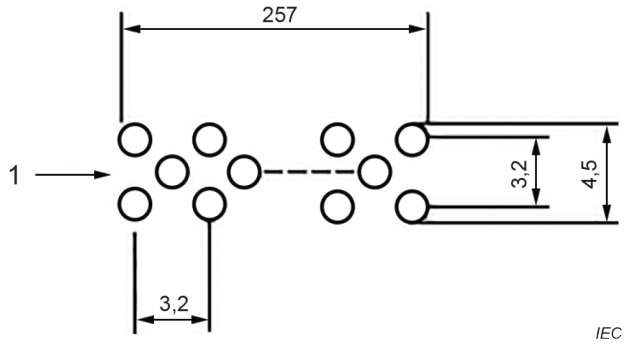

Key

1 242 round holes, 1,32 mm in diameter on 3,2 mm centres, staggered in three rows of 81, 80 and 81 holes, centred on the face of the burner

Figure 6 – Arrangement of holes for burners

Documents
Document Sharing Hub
Full document details: IEC 60332-3-10 2018 RLV

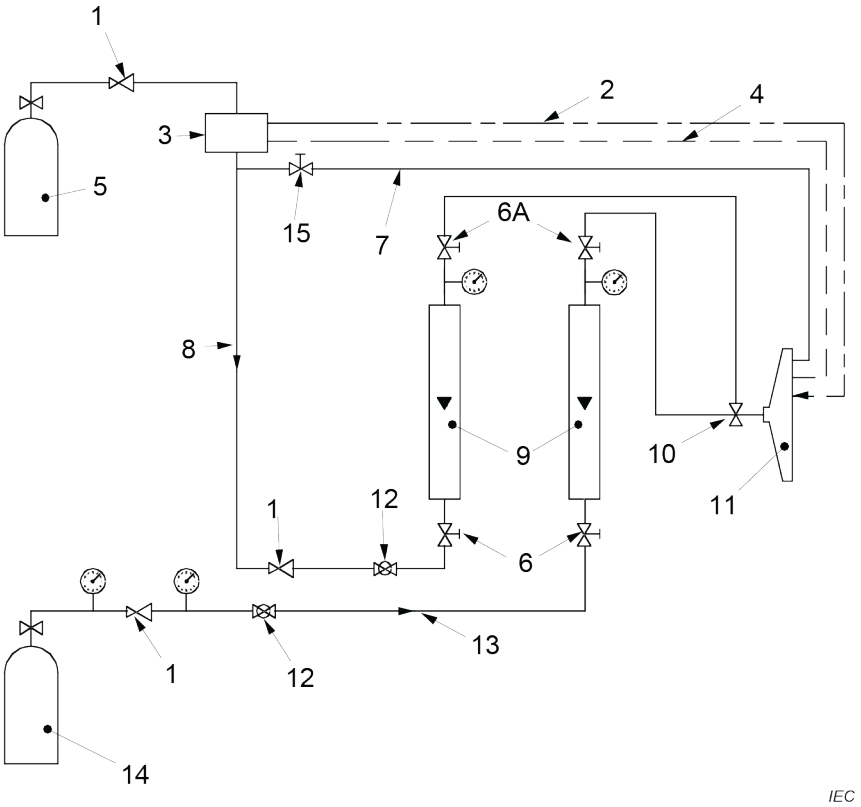

Key

1	regulator	9	~~rotameter type~~ flowmeters
2	piezoelectric igniter	10	venturi mixer
3	flame failure device	11	burner
4	control thermocouples	12	ball valve
5	propane cylinder	13	air flow
6	screw valve (6a = alternative position)	14	compressed air cylinder
7	pilot feed	15	screw valve on pilot feed
8	gas flow		

Figure 7 – ~~Example of~~ Schematic diagram of an example of a burner control system~~s~~ using rotameters

Documents
Document Sharing Hub
Full document details: IEC 60332-3-10 2018 RLV

Annex A
(informative)

Details of recommended burner and mass flowmeters[3]

A burner (catalogue number 10L11-55) and venturi mixer (catalogue number 14-18) complying with the requirements of Clause 6 can be obtained from:

~~American Gas Furnace~~
~~PO Box 496~~
~~140 Spring Street~~
~~Elizabeth, NJ 07207~~
~~USA~~

~~Tel: +1 201 352 2120~~
~~Telefax: +1 201 352 5174~~

AGF Burner, Inc.
814 Asbury Ave.
Asbury Park, NJ 07712
www.agfburner.com

Commercially available mass flowmeters suitable for use in carrying out tests according to this document are supplied by, amongst others:

– Brooks Instrument,
– KOBOLD Instruments AG.

[3] The information given in Annex A, covering named products and their suppliers, is given for the convenience of users of this document and does not constitute an endorsement by IEC of the products named. Equivalent products may be used if they can be shown to lead to the same results.

AVA Documents
Document Sharing Hub

Full document details: IEC 60332-3-10 2018 RLV

Annex B
(informative)

Flowmeter calibration correction factors

B.1 General

When using the rotameter type flowmeters to monitor the supply rate of the gases, two factors need to be considered in order to use them correctly. It is important

a) to know what the flowmeter is indicating when used under the actual operating conditions;

b) to know under what conditions of temperature and gas pressure the flowmeter was calibrated, and at what conditions it was designed to operate.

Considering point a), most flowmeters are designed to indicate the volumetric flow rate at atmospheric temperature and pressure, i.e. 20 °C and 1 bar. However, considering point b), not all flowmeters are calibrated and designed to work at the same temperature and pressure, and care should be taken to ensure that the temperature and pressure of the gas flowing through a flowmeter are correct for that particular meter. Working the flowmeter at temperatures and pressures different from these conditions requires application of a correction factor such as provided hereinafter.

B.2 Example

B.2.1 General

Assume that air flow rate of 77,7 l/min at 1 bar and 20 °C is required at the burner.

Flowmeter 1 is calibrated to operate at 2,4 bar absolute and 15 °C, but to indicate l/min at 1 bar and 15 °C.

Flowmeter 2 is calibrated to operate at 1 bar absolute and 20 °C, but to indicate l/min at 1 bar and 20 °C.

Assume that the air supply pressure up to and including the flowmeters is alternatively at 1 bar (see B.2.2) or at 2,4 bar (see B.2.3) and 20 °C.

The calibration correction factor is given as follows:

$$C = \sqrt{\frac{P_1}{P_2} \times \frac{T_2}{T_1}}$$

where

T is the absolute temperature, in kelvins (K);

P is the absolute pressure, in bars (bar);

P_1, T_1 are the calibration conditions;

P_2, T_2 are the operating conditions.

Documents
Document Sharing Hub
Full document details: IEC 60332-3-10 2018 RLV