IEC 60332-3-10

Edition 2.0 2018-07

INTERNATIONAL STANDARD

NORME INTERNATIONALE

GROUP SAFETY PUBLICATION
PUBLICATION GROUPÉE DE SÉCURITÉ

Tests on electric and optical fibre cables under fire conditions – Part 3-10: Test for vertical flame spread of vertically-mounted bunched wires or cables – Apparatus

Essais des câbles électriques et des câbles à fibres optiques soumis au feu – Partie 3-10: Essai de propagation verticale de la flamme des fils ou câbles montés en nappes en position verticale – Appareillage

IEC 60332-3-10:2018-07(en-fr)

Documents
Document Sharing Hub
Full document details: IEC 60332-3-10 2018

THIS PUBLICATION IS COPYRIGHT PROTECTED
Copyright © 2018 IEC, Geneva, Switzerland

All rights reserved. Unless otherwise specified, no part of this publication may be reproduced or utilized in any form or by any means, electronic or mechanical, including photocopying and microfilm, without permission in writing from either IEC or IEC's member National Committee in the country of the requester. If you have any questions about IEC copyright or have an enquiry about obtaining additional rights to this publication, please contact the address below or your local IEC member National Committee for further information.

Droits de reproduction réservés. Sauf indication contraire, aucune partie de cette publication ne peut être reproduite ni utilisée sous quelque forme que ce soit et par aucun procédé, électronique ou mécanique, y compris la photocopie et les microfilms, sans l'accord écrit de l'IEC ou du Comité national de l'IEC du pays du demandeur. Si vous avez des questions sur le copyright de l'IEC ou si vous désirez obtenir des droits supplémentaires sur cette publication, utilisez les coordonnées ci-après ou contactez le Comité national de l'IEC de votre pays de résidence.

IEC Central Office
3, rue de Varembé
CH-1211 Geneva 20
Switzerland

Tel.: +41 22 919 02 11
info@iec.ch
www.iec.ch

About the IEC
The International Electrotechnical Commission (IEC) is the leading global organization that prepares and publishes International Standards for all electrical, electronic and related technologies.

About IEC publications
The technical content of IEC publications is kept under constant review by the IEC. Please make sure that you have the latest edition, a corrigenda or an amendment might have been published.

IEC Catalogue - webstore.iec.ch/catalogue
The stand-alone application for consulting the entire bibliographical information on IEC International Standards, Technical Specifications, Technical Reports and other documents. Available for PC, Mac OS, Android Tablets and iPad.

IEC publications search - webstore.iec.ch/advsearchform
The advanced search enables to find IEC publications by a variety of criteria (reference number, text, technical committee,…). It also gives information on projects, replaced and withdrawn publications.

IEC Just Published - webstore.iec.ch/justpublished
Stay up to date on all new IEC publications. Just Published details all new publications released. Available online and also once a month by email.

Electropedia - www.electropedia.org
The world's leading online dictionary of electronic and electrical terms containing 21 000 terms and definitions in English and French, with equivalent terms in 16 additional languages. Also known as the International Electrotechnical Vocabulary (IEV) online.

IEC Glossary - std.iec.ch/glossary
67 000 electrotechnical terminology entries in English and French extracted from the Terms and Definitions clause of IEC publications issued since 2002. Some entries have been collected from earlier publications of IEC TC 37, 77, 86 and CISPR.

IEC Customer Service Centre - webstore.iec.ch/csc
If you wish to give us your feedback on this publication or need further assistance, please contact the Customer Service Centre: sales@iec.ch.

A propos de l'IEC
La Commission Electrotechnique Internationale (IEC) est la première organisation mondiale qui élabore et publie des Normes internationales pour tout ce qui a trait à l'électricité, à l'électronique et aux technologies apparentées.

A propos des publications IEC
Le contenu technique des publications IEC est constamment revu. Veuillez vous assurer que vous possédez l'édition la plus récente, un corrigendum ou amendement peut avoir été publié.

Catalogue IEC - webstore.iec.ch/catalogue
Application autonome pour consulter tous les renseignements bibliographiques sur les Normes internationales, Spécifications techniques, Rapports techniques et autres documents de l'IEC. Disponible pour PC, Mac OS, tablettes Android et iPad.

Recherche de publications IEC - webstore.iec.ch/advsearchform

La recherche avancée permet de trouver des publications IEC en utilisant différents critères (numéro de référence, texte, comité d'études,…). Elle donne aussi des informations sur les projets et les publications remplacées ou retirées.

IEC Just Published - webstore.iec.ch/justpublished

Restez informé sur les nouvelles publications IEC. Just Published détaille les nouvelles publications parues. Disponible en ligne et aussi une fois par mois par email.

Electropedia - www.electropedia.org

Le premier dictionnaire en ligne de termes électroniques et électriques. Il contient 21 000 termes et définitions en anglais et en français, ainsi que les termes équivalents dans 16 langues additionnelles. Egalement appelé Vocabulaire Electrotechnique International (IEV) en ligne.

Glossaire IEC - std.iec.ch/glossary
67 000 entrées terminologiques électrotechniques, en anglais et en français, extraites des articles Termes et Définitions des publications IEC parues depuis 2002. Plus certaines entrées antérieures extraites des publications des CE 37, 77, 86 et CISPR de l'IEC.

Service Clients - webstore.iec.ch/csc

Si vous désirez nous donner des commentaires sur cette publication ou si vous avez des questions contactez-nous: sales@iec.ch.

Documents
Document Sharing Hub

Full document details: IEC 60332-3-10 2018

IEC 60332-3-10

Edition 2.0 2018-07

INTERNATIONAL STANDARD

NORME INTERNATIONALE

GROUP SAFETY PUBLICATION
PUBLICATION GROUPÉE DE SÉCURITÉ

Tests on electric and optical fibre cables under fire conditions – Part 3-10: Test for vertical flame spread of vertically-mounted bunched wires or cables – Apparatus

Essais des câbles électriques et des câbles à fibres optiques soumis au feu – Partie 3-10: Essai de propagation verticale de la flamme des fils ou câbles montés en nappes en position verticale – Appareillage

INTERNATIONAL
ELECTROTECHNICAL
COMMISSION

COMMISSION
ELECTROTECHNIQUE
INTERNATIONALE

ICS 13.220.40; 29.060.20

ISBN 978-2-8322-5795-1

Warning! Make sure that you obtained this publication from an authorized distributor.
Attention! Veuillez vous assurer que vous avez obtenu cette publication via un distributeur agréé.

® Registered trademark of the International Electrotechnical Commission
Marque déposée de la Commission Electrotechnique Internationale

Documents
Document Sharing Hub

Full document details: IEC 60332-3-10 2018

CONTENTS

FOREWORD 3
INTRODUCTION 5
1 Scope 6
2 Normative references 6
3 Terms and definitions 6
4 Test environment 6
5 Test apparatus 6
5.1 Test chamber 7
5.2 Air supply 7
5.3 Ladder types 7
5.4 Effluent cleaning attachment 7
6 Ignition source 8
6.1 Type 8
6.2 Positioning 9
Annex A (informative) Details of recommended burner and mass flowmeters 18
Annex B (informative) Flowmeter calibration correction factors 19
B.1 General 19
B.2 Example 19
B.2.1 General 19
B.2.2 Air supplied at 1 bar 20
B.2.3 Air supplied at 2,4 bar 20
Bibliography 22

Figure 1 – Test chamber 11
Figure 2 – Thermal insulation of back and sides of the test chamber 12
Figure 3 – Positioning of burner and typical arrangement of test sample on ladder 13
Figure 4 – Tubular steel ladders for cable test 14
Figure 5 – Burner configurations 15
Figure 6 – Arrangement of holes for burners 16
Figure 7 – Schematic diagram of an example of a burner control system using rotameters 17

Documents
Document Sharing Hub
Full document details: IEC 60332-3-10 2018

INTERNATIONAL ELECTROTECHNICAL COMMISSION

_____

TESTS ON ELECTRIC AND OPTICAL FIBRE CABLES UNDER FIRE CONDITIONS –

Part 3-10: Test for vertical flame spread of vertically-mounted bunched wires or cables – Apparatus

FOREWORD

1) The International Electrotechnical Commission (IEC) is a worldwide organization for standardization comprising all national electrotechnical committees (IEC National Committees). The object of IEC is to promote international co-operation on all questions concerning standardization in the electrical and electronic fields. To this end and in addition to other activities, IEC publishes International Standards, Technical Specifications, Technical Reports, Publicly Available Specifications (PAS) and Guides (hereafter referred to as "IEC Publication(s)"). Their preparation is entrusted to technical committees; any IEC National Committee interested in the subject dealt with may participate in this preparatory work. International, governmental and non-governmental organizations liaising with the IEC also participate in this preparation. IEC collaborates closely with the International Organization for Standardization (ISO) in accordance with conditions determined by agreement between the two organizations.
2) The formal decisions or agreements of IEC on technical matters express, as nearly as possible, an international consensus of opinion on the relevant subjects since each technical committee has representation from all interested IEC National Committees.
3) IEC Publications have the form of recommendations for international use and are accepted by IEC National Committees in that sense. While all reasonable efforts are made to ensure that the technical content of IEC Publications is accurate, IEC cannot be held responsible for the way in which they are used or for any misinterpretation by any end user.
4) In order to promote international uniformity, IEC National Committees undertake to apply IEC Publications transparently to the maximum extent possible in their national and regional publications. Any divergence between any IEC Publication and the corresponding national or regional publication shall be clearly indicated in the latter.
5) IEC itself does not provide any attestation of conformity. Independent certification bodies provide conformity assessment services and, in some areas, access to IEC marks of conformity. IEC is not responsible for any services carried out by independent certification bodies.
6) All users should ensure that they have the latest edition of this publication.
7) No liability shall attach to IEC or its directors, employees, servants or agents including individual experts and members of its technical committees and IEC National Committees for any personal injury, property damage or other damage of any nature whatsoever, whether direct or indirect, or for costs (including legal fees) and expenses arising out of the publication, use of, or reliance upon, this IEC Publication or any other IEC Publications.
8) Attention is drawn to the Normative references cited in this publication. Use of the referenced publications is indispensable for the correct application of this publication.
9) Attention is drawn to the possibility that some of the elements of this IEC Publication may be the subject of patent rights. IEC shall not be held responsible for identifying any or all such patent rights.

International Standard IEC 60332-3-10 has been prepared by IEC technical committee 20: Electric cables.

This second edition cancels and replaces the first edition published in 2000 and Amendment 1:2008. This edition constitutes a technical revision.

This edition includes the following significant technical changes with respect to the previous edition:

a) adjustments have been made to the title, and elsewhere, to emphasise the standard is applicable to optical fibre cables as well as metallic conductor types;
b) details of the way in which cables are mounted on the ladder have been better defined in order to improve repeatability and reproducibility;

AVA Documents Document Sharing Hub

Full document details: IEC 60332-3-10 2018

c) the connection of the venturi mixer to the burner is better defined.

It has the status of a group safety publication in accordance with IEC Guide 104.

The text of this International Standard is based on the following documents:

FDIS	Report on voting
20/1797/FDIS	20/1814/RVD

Full information on the voting for the approval of this International Standard can be found in the report on voting indicated in the above table.

This document has been drafted in accordance with the ISO/IEC Directives, Part 2.

A list of all parts in the IEC 60332 series, published under the general title *Tests on electric and optical fibre cables under fire conditions*, can be found on the IEC website.

Future standards in this series will carry the new general title as cited above. Titles of existing standards in this series will be updated at the time of the next edition.

The committee has decided that the contents of this publication will remain unchanged until the stability date indicated on the IEC website under "http://webstore.iec.ch" in the data related to the specific publication. At this date, the publication will be

- reconfirmed,
- withdrawn,
- replaced by a revised edition, or
- amended.

The contents of the corrigendum of October 2018 have been included in this copy.

Documents
Document Sharing Hub

Full document details: IEC 60332-3-10 2018

INTRODUCTION

IEC 60332-3-10 is part of a series of publications dealing with tests on electric and optical fibre cables under fire conditions.

The IEC 60332-1 and IEC 60332-2 series specify methods of test for flame spread characteristics for a single vertical insulated wire or cable. It cannot be assumed that, because a wire or cable meets the requirements of the IEC 60332-1 and IEC 60332-2 series, a vertical bunch of similar cables or wires will behave in a similar manner. This is because flame spread along a vertical bunch of cables depends on a number of features, such as

a) the volume of combustible material exposed to the fire and to any flame which may be produced by the combustion of the cables;

b) the geometrical configuration of the cables and their relationship to an enclosure;

c) the temperature at which it is possible to ignite the gases emitted from the cables;

d) the quantity of combustible gas released from the cables for a given temperature rise;

e) the volume of air passing through the cable installation;

f) the construction of the cable, for example armoured or unarmoured, multi- or single-core.

All of the foregoing assume that the cables are able to be ignited when involved in an external fire.

The IEC 60332-3 series gives details of a test where a number of cables are bunched together to form various test sample installations. For easier use and differentiation of various test categories, the parts are designated as follows:

Part 3-10: Apparatus

Part 3-21: Category A F/R

Part 3-22: Category A

Part 3-23: Category B

Part 3-24: Category C

Part 3-25: Category D

Parts from 3-21 onwards define the various categories and the relevant procedures. The categories are distinguished by test duration, the volume of non-metallic material of the test sample and the method of mounting the sample for the test. In all categories, cables having at least one conductor of cross-sectional area greater than 35 mm^2 are tested in a spaced configuration, whereas cables of conductor cross-sectional area of 35 mm^2 or smaller and optical fibre cables are tested in a touching configuration.

The categories are not necessarily related to different safety levels in actual cable installations. The actual installed configuration of the cables may be a major determinant in the level of flame spread occurring in an actual fire.

The method of mounting described as category A F/R (Part 3-21) is intended for special cable designs used in particular installations.

Categories A, B, C and D (Part 3-22 to Part 3-25 respectively) are for general use where different non-metallic volumes are applicable.

Documents
Document Sharing Hub

Full document details: IEC 60332-3-10 2018

TESTS ON ELECTRIC AND OPTICAL FIBRE CABLES UNDER FIRE CONDITIONS –

Part 3-10: Test for vertical flame spread of vertically-mounted bunched wires or cables – Apparatus

1 Scope

This part of IEC 60332 details the apparatus and its arrangement and calibration for methods of test for the assessment of vertical flame spread of vertically-mounted bunched wires or cables, electrical or optical, under defined conditions.

NOTE For the purpose of this document the term “electric wire or cable” covers all insulated metallic conductor cables used for the conveyance of energy or signals.

2 Normative references

There are no normative references in this document.

3 Terms and definitions

For the purposes of this document, the following terms and definitions apply.

ISO and IEC maintain terminological databases for use in standardization at the following addresses:

- IEC Electropedia: available at http://www.electropedia.org/
- ISO Online browsing platform: available at http://www.iso.org/obp

3.1
ignition source
source of energy that initiates combustion

[SOURCE: ISO 13943:2017, 3.219]

4 Test environment

The test shall not be carried out if the external wind speed, measured by an anemometer fitted on the top of the test rig, is greater than 8 m/s and shall not be carried out if the temperature of the inside walls is below 5 °C or above 40 °C measured at a point approximately 1 500 mm above floor level, 50 mm from a side wall, and 1 000 mm from the door. The enclosure door shall be closed throughout the test.

5 Test apparatus

The test apparatus consists of the following.

Documents
Document Sharing Hub
Full document details: IEC 60332-3-10 2018

5.1 Test chamber

The test rig (see Figures 1a) and 1b)) shall comprise a vertical test chamber having a width of (1 000 ± 100) mm, a depth of (2 000 ± 100) mm and a height of (4 000 ± 100) mm; the floor of the chamber shall be raised above ground level. The test chamber shall be nominally airtight along its sides, air being admitted at the base of the test chamber through an aperture of (800 ± 20) mm × (400 ± 10) mm situated (150 ± 10) mm from the front wall of the test chamber (see Figure 1).

An outlet (300 ± 30) mm x (1 000 ± 100) mm shall be made at the rear edge of the top of the test chamber. The back and sides of the test chamber shall be thermally insulated to give a coefficient of heat transfer of approximately 0,7 $W \cdot m^{-2} \cdot K^{-1}$. For example, a steel plate 1,5 mm to 2,0 mm thick covered with 65 mm of mineral wool with a suitable external cladding is satisfactory (see Figure 2). The distance between the ladder and the rear wall of the chamber is (150 ± 10) mm, and between the bottom rung of the ladder and the floor (400 ± 5) mm. The clearance between the lowest point of the test piece and the floor is approximately 100 mm (see Figure 3).

5.2 Air supply

A means of supplying a controlled air flow through the chamber shall be fitted.

Air shall be introduced into the test chamber through a box fitted directly underneath, and of approximately the same dimensions as the air inlet aperture. Air shall be blown into the box from a suitable fan through a straight section of duct which shall enter from the rear of the test chamber and be parallel to the floor and along the burner centre line as shown in Figure 1b). The duct shall be arranged to allow air into the box through an opening in the longest side.

A grille may be placed over the air inlet aperture to facilitate accessing the test chamber but should neither restrict the airflow nor modify its direction.

A duct of constant cross-section of approximately 240 cm^2 and minimum length of 60 cm is recommended.

Prior to burner ignition, the air flow shall be adjusted to a rate of (5 000 ± 500) l/min at a constant controlled temperature of (20 ± 10) °C and at atmospheric pressure and measured at the inlet side before the test commences. This air flow rate shall be maintained throughout the test until cable burning or glowing has ceased or for a maximum time of 1 h from completion of the test flame application period, after which period the flame or glowing shall be extinguished.

In order to remove noxious gases, it is recommended to maintain the air flow for some minutes after the end of the test, before entering the test chamber.

5.3 Ladder types

There are two types of tubular steel ladder: a standard ladder of (500 ± 5) mm width and a wide ladder of (800 ± 10) mm width. Details of the types of ladder are given in Figures 4a) and 4b).

5.4 Effluent cleaning attachment

Legal requirements may make it necessary for equipment for collecting and washing the effluent to be fitted to the test chamber. This equipment shall not cause a change in the air flow rate through the test chamber.

Documents
Document Sharing Hub
Full document details: IEC 60332-3-10 2018

6 Ignition source

6.1 Type

As required by the test procedure the ignition source shall be one or two ribbon-type propane gas burners complete with venturi mixer, and their own set of flowmeters.

The distance between venturi mixer and burner shall be at least 150 mm. The inner diameter of the tubing (piping or braided flexible hose) between venturi mixer and burner shall be at least equal to the 20 mm inner diameter of the outlet of the venturi mixer.

It is recommended that the distance between venturi mixer and burner does not exceed 900 mm.

Bends between venturi mixer and burner should be minimized.

The propane gas shall be technical grade propane of nominal 95 % purity. The flame-producing surface of the burner(s) shall consist of a flat metal plate through which 242 holes of 1,32 mm in diameter are drilled on 3,2 mm centres in three staggered rows of 81, 80 and 81 holes each to form an array having the nominal dimensions 257 mm × 4,5 mm. As the burner plate may be drilled without the use of a drilling jig, the spacing of the holes may vary slightly. Additionally, a row of small holes may be milled on each side of the burner plate to serve as pilot holes with the function of keeping the flame burning.

The burners are shown in Figures 5a) and 5b), and the placement of the holes in Figure 6.

To ensure reproducibility between results from different testing stations, a burner, which is readily available, is recommended for use. For details, see Annex A.

Each burner shall be individually fitted with an accurate means of controlling the propane gas and air input flow rates, either by means of a rotameter-type flowmeter or mass flowmeter.

Mass flowmeters are recommended for ease of use.

Figure 7 shows an example of a rotameter-type system.

WARNING – The following precautions are recommended to ensure safe operation of the ignition source:

– the gas supply system should be equipped with flashback arresters;
– a flame failure protection device should be used;
– safe sequencing of the propane and air supply should be employed during ignition and extinguishing.

The calibration of the propane gas and air rotameter-type flowmeters shall be checked after installation to ensure that the pipework and venturi mixer have not affected the calibration.

Corrections for the variations in temperature and pressure from that specified on the propane gas and air rotameter-type flowmeters shall be applied when necessary, see Annex B.

Propane gas and air rotameter-type flowmeters shall be calibrated according to the following reference conditions.

Reference temperature and pressure are 20 °C and 1 bar (100 kPa).

For the purposes of this test, the air shall have a dew-point not higher than 0 °C.

Documents
Document Sharing Hub
Full document details: IEC 60332-3-10 2018

The flow rates for the test shall be as follows:

Air (77,7 ± 4,8) l/min at reference conditions (1 bar and 20°C) or (1550 ± 95) mg/s;

Propane (13,5 ± 0,5) l/min at reference conditions (1 bar and 20°C) or (442 ± 11) mg/s;

to provide a nominal 73,7 x 10^6 J/h (20,5 kW)[1] to each burner.

6.2 Positioning

For the test, the burner shall be arranged horizontally at a distance of (75 ± 5) mm from the front surface of the cable sample, (630 ± 5) mm above the floor of the test chamber and approximately symmetrical with the axis of the ladder. The point of application of the burner flame shall lie between two cross-bars on the ladder (see Figure 2 and Figure 3).

Adjustment of air and gas flows prior to the test may be carried out away from the test position.

Where two burners are used in combination with the wide ladder, they shall be arranged so as to be approximately symmetrical with the axis of the ladder, as shown in Figure 5b). The burner system shall be positioned such that the centre line of the burner system is approximately coincident with the centre of the ladder.

[1] A net heat of combustion of 46,4 kJ/g is used to calculate the propane flow rate.

Documents
Document Sharing Hub

Full document details: IEC 60332-3-10 2018

Dimensions in millimetres

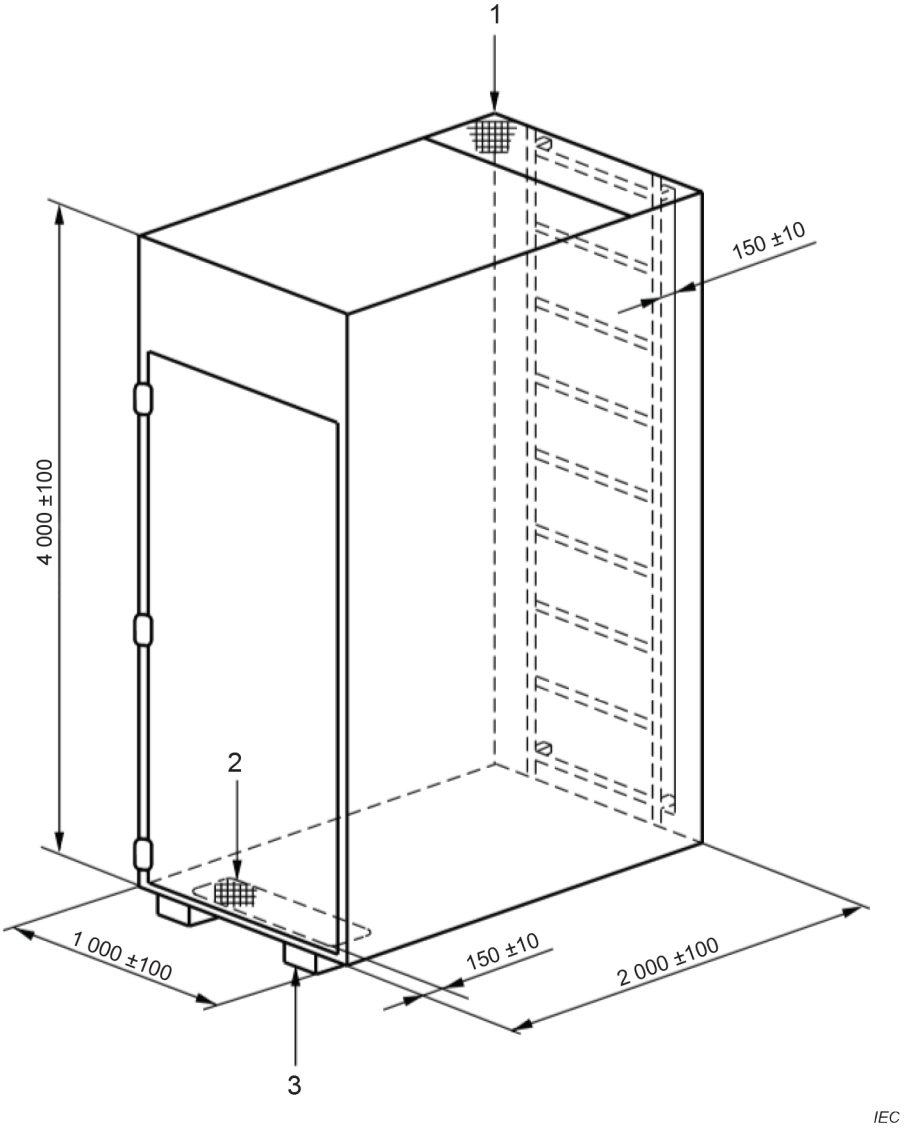

Key

1 smoke outlet (300 ± 30) × (1 000 ± 100)

2 air inlet (800 ± 20) × (400 ± 10)

3 rig raised above ground level

a) Test chamber

Documents
Document Sharing Hub
Full document details: IEC 60332-3-10 2018

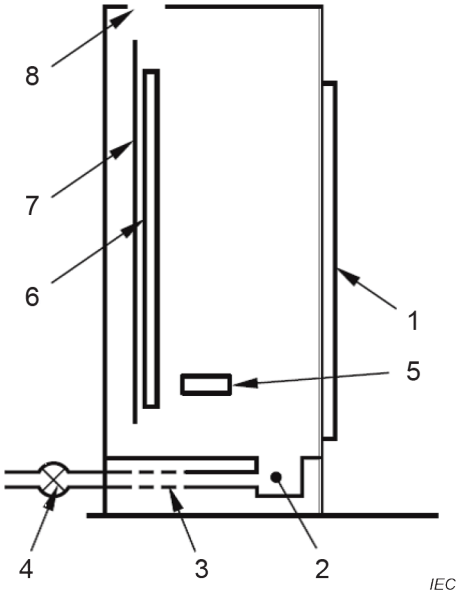

Key

1	door	5	burner
2	air inlet box	6	cables tested
3	air inlet duct	7	ladder
4	fan (illustrative position)	8	smoke outlet

b) Schematic side elevation of test chamber and air inlet arrangement

Figure 1 – Test chamber

Documents
Document Sharing Hub
Full document details: IEC 60332-3-10 2018

Dimensions in millimetres

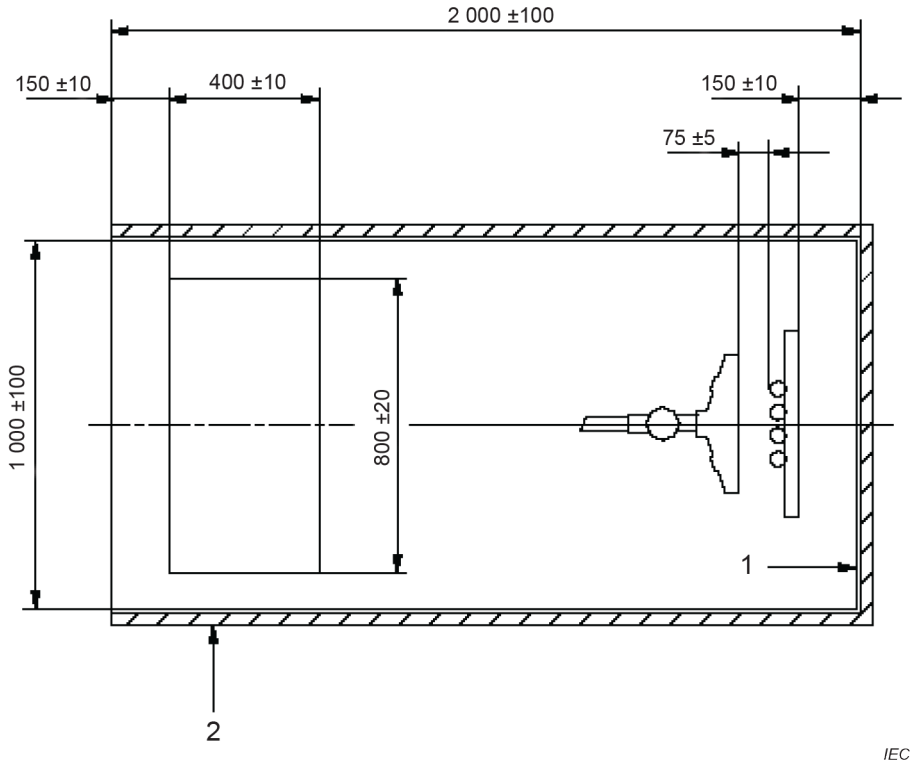

Key

1 steel plate, 1,5 mm to 2 mm thick

2 thermal insulation of mineral wool approximately 65 mm thick with suitable external cladding to give a coefficient of heat transfer of approximately 0,7 W × m^{-2} × K^{-1}

Figure 2 – Thermal insulation of back and sides of the test chamber

Documents
Document Sharing Hub
Full document details: IEC 60332-3-10 2018

Dimensions in millimetres
(Dimensions are approximate except where toleranced)

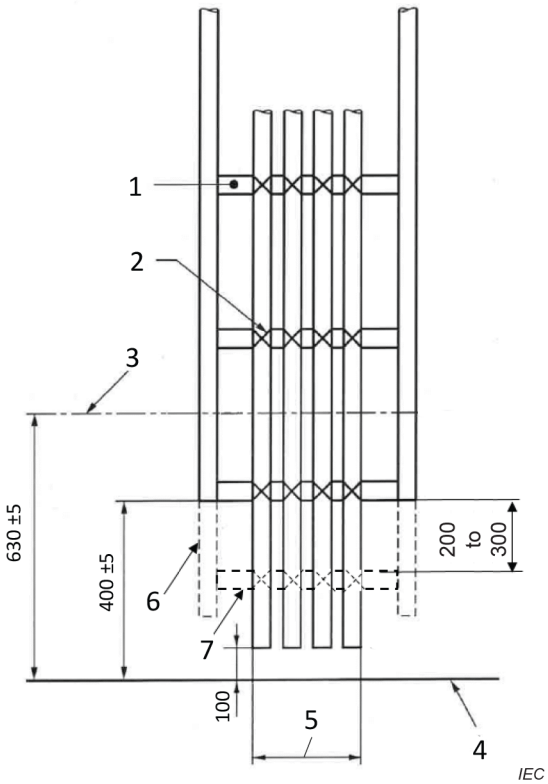

Key

1	round steel rungs	5	maximum width (according to test category)
2	metal wire ties	6	optional extensions of the steel legs
3	centre line of burner	7	optional steel rung
4	floor		

Figure 3 – Positioning of burner and typical arrangement of test sample on ladder

Documents
Document Sharing Hub
Full document details: IEC 60332-3-10 2018