IEC 60332-3-24

Edition 2.0 2018-07
REDLINE VERSION

INTERNATIONAL STANDARD

colour inside

GROUP SAFETY PUBLICATION

Tests on electric and optical fibre cables under fire conditions – Part 3-24: Test for vertical flame spread of vertically-mounted bunched wires or cables – Category C

IEC 60332-3-24:2018-07 RLV(en)

Documents
Document Sharing Hub

Full document details: IEC 60332-3-24 2018 RLV

THIS PUBLICATION IS COPYRIGHT PROTECTED
Copyright © 2018 IEC, Geneva, Switzerland

All rights reserved. Unless otherwise specified, no part of this publication may be reproduced or utilized in any form or by any means, electronic or mechanical, including photocopying and microfilm, without permission in writing from either IEC or IEC's member National Committee in the country of the requester. If you have any questions about IEC copyright or have an enquiry about obtaining additional rights to this publication, please contact the address below or your local IEC member National Committee for further information.

IEC Central Office
3, rue de Varembé
CH-1211 Geneva 20
Switzerland

Tel.: +41 22 919 02 11
info@iec.ch
www.iec.ch

About the IEC
The International Electrotechnical Commission (IEC) is the leading global organization that prepares and publishes International Standards for all electrical, electronic and related technologies.

About IEC publications
The technical content of IEC publications is kept under constant review by the IEC. Please make sure that you have the latest edition, a corrigenda or an amendment might have been published.

IEC Catalogue - webstore.iec.ch/catalogue
The stand-alone application for consulting the entire bibliographical information on IEC International Standards, Technical Specifications, Technical Reports and other documents. Available for PC, Mac OS, Android Tablets and iPad.

IEC publications search - webstore.iec.ch/advsearchform
The advanced search enables to find IEC publications by a variety of criteria (reference number, text, technical committee,…). It also gives information on projects, replaced and withdrawn publications.

IEC Just Published - webstore.iec.ch/justpublished
Stay up to date on all new IEC publications. Just Published details all new publications released. Available online and also once a month by email.

Electropedia - www.electropedia.org
The world's leading online dictionary of electronic and electrical terms containing 21 000 terms and definitions in English and French, with equivalent terms in 16 additional languages. Also known as the International Electrotechnical Vocabulary (IEV) online.

IEC Glossary - std.iec.ch/glossary
67 000 electrotechnical terminology entries in English and French extracted from the Terms and Definitions clause of IEC publications issued since 2002. Some entries have been collected from earlier publications of IEC TC 37, 77, 86 and CISPR.

IEC Customer Service Centre - webstore.iec.ch/csc
If you wish to give us your feedback on this publication or need further assistance, please contact the Customer Service Centre: sales@iec.ch.

Documents
Document Sharing Hub

Full document details: IEC 60332-3-24 2018 RLV

IEC 60332-3-24

Edition 2.0 2018-07
REDLINE VERSION

INTERNATIONAL STANDARD

colour inside

GROUP SAFETY PUBLICATION

Tests on electric and optical fibre cables under fire conditions – Part 3-24: Test for vertical flame spread of vertically-mounted bunched wires or cables – Category C

INTERNATIONAL
ELECTROTECHNICAL
COMMISSION

ICS 13.220.40; 29.060.20

ISBN 978-2-8322-5891-0

Warning! Make sure that you obtained this publication from an authorized distributor.

® Registered trademark of the International Electrotechnical Commission

Documents
Document Sharing Hub

Full document details: IEC 60332-3-24 2018 RLV

© IEC 2019

INTERNATIONAL ELECTROTECHNICAL COMMISSION

IEC 60332-3-24
Edition 2.0 2018-07

TESTS ON ELECTRIC AND OPTICAL FIBRE CABLES UNDER FIRE CONDITIONS –

Part 3-24: Test for vertical flame spread of vertically-mounted bunched wires or cables – Category C

INTERPRETATION SHEET 1

This interpretation sheet has been prepared by IEC technical committee 20: Electric cables.

The text of this interpretation sheet is based on the following documents:

DISH	Report on voting
20/1853/DISH	20/1864/RVDISH

Full information on the voting for the approval of this interpretation sheet can be found in the report on voting indicated in the above table.

The request to clarify the retest procedure was considered by TC 20/WG 18 and a common view from the experts has been communicated:

1) The selection of the two retest samples should be agreed between manufacturer and testing/certification body.
2) The retest samples shall be of exactly the same construction (same number of cores, same conductor cross section, same design) as of the first test sample (that failed).
3) The retest samples should be taken from the same cable length as of the first test sample, but WG18 finds it acceptable that, in case sufficient length is not available anymore, the retest samples are taken from another production length/order (of the same construction).

   In case the cable design is changed, it is no longer considered a retest sample, but a different/new test sample.

IEC 60332-3-24:2018-07/ISH1:2019-01(en)

ICS 13.220.40; 29.060.20

Documents
Document Sharing Hub
Full document details: IEC 60332-3-24 2018 RLV

CONTENTS

FOREWORD....3
INTRODUCTION....5
1 Scope....6
2 Normative references....6
3 Terms and definitions....6
4 Test apparatus....7
4.1 General....7
4.2 Ignition source....7
5 Test procedure....7
5.1 Test sample....7
5.2 Determination of the number of test pieces....7
5.3 Mounting of the test sample....8
5.3.1 Cables having at least one conductor above 35 mm^2....8
5.3.2 Cables having conductors 35 mm^2 and below and optical cables....9
5.4 Flame application time....9
6 Evaluation of test results....9
7 Performance requirements....10
8 Retest procedure....10
9 Test report....10
Annex A (normative) Guidance on cable selection for type approval testing....12
Annex B (informative) Recommended performance requirements....13
Bibliography....14

Figure 1 – Spaced cables mounted on the front side of the standard ladder....11
Figure 2 – Touching cables mounted on the front side of the standard ladder (arrays of cables in contact)....11

Table A.1 – Summary of test conditions....12

Documents
Document Sharing Hub
Full document details: IEC 60332-3-24 2018 RLV

INTERNATIONAL ELECTROTECHNICAL COMMISSION

TESTS ON ELECTRIC AND OPTICAL FIBRE CABLES UNDER FIRE CONDITIONS –

Part 3-24: Test for vertical flame spread of vertically-mounted bunched wires or cables – Category C

FOREWORD

1) The International Electrotechnical Commission (IEC) is a worldwide organization for standardization comprising all national electrotechnical committees (IEC National Committees). The object of IEC is to promote international co-operation on all questions concerning standardization in the electrical and electronic fields. To this end and in addition to other activities, IEC publishes International Standards, Technical Specifications, Technical Reports, Publicly Available Specifications (PAS) and Guides (hereafter referred to as "IEC Publication(s)"). Their preparation is entrusted to technical committees; any IEC National Committee interested in the subject dealt with may participate in this preparatory work. International, governmental and non-governmental organizations liaising with the IEC also participate in this preparation. IEC collaborates closely with the International Organization for Standardization (ISO) in accordance with conditions determined by agreement between the two organizations.
2) The formal decisions or agreements of IEC on technical matters express, as nearly as possible, an international consensus of opinion on the relevant subjects since each technical committee has representation from all interested IEC National Committees.
3) IEC Publications have the form of recommendations for international use and are accepted by IEC National Committees in that sense. While all reasonable efforts are made to ensure that the technical content of IEC Publications is accurate, IEC cannot be held responsible for the way in which they are used or for any misinterpretation by any end user.
4) In order to promote international uniformity, IEC National Committees undertake to apply IEC Publications transparently to the maximum extent possible in their national and regional publications. Any divergence between any IEC Publication and the corresponding national or regional publication shall be clearly indicated in the latter.
5) IEC itself does not provide any attestation of conformity. Independent certification bodies provide conformity assessment services and, in some areas, access to IEC marks of conformity. IEC is not responsible for any services carried out by independent certification bodies.
6) All users should ensure that they have the latest edition of this publication.
7) No liability shall attach to IEC or its directors, employees, servants or agents including individual experts and members of its technical committees and IEC National Committees for any personal injury, property damage or other damage of any nature whatsoever, whether direct or indirect, or for costs (including legal fees) and expenses arising out of the publication, use of, or reliance upon, this IEC Publication or any other IEC Publications.
8) Attention is drawn to the Normative references cited in this publication. Use of the referenced publications is indispensable for the correct application of this publication.
9) Attention is drawn to the possibility that some of the elements of this IEC Publication may be the subject of patent rights. IEC shall not be held responsible for identifying any or all such patent rights.

This redline version of the official IEC Standard allows the user to identify the changes made to the previous edition. A vertical bar appears in the margin wherever a change has been made. Additions are in green text, deletions are in strikethrough red text.

Documents
Document Sharing Hub

Full document details: IEC 60332-3-24 2018 RLV

International Standard IEC 60332-3-24 has been prepared by IEC technical committee 20: Electric cables.

This second edition cancels and replaces the first edition published in 2000 and Amendment 1:2008. This edition constitutes a technical revision.

This edition includes the following significant technical changes with respect to the previous edition:

a) adjustments have been made to the title, and elsewhere, to emphasise the standard is applicable to optical fibre cables as well as metallic conductor types;
b) details of the way in which cables are mounted on the ladder have been better defined in order to improve repeatability and reproducibility.

It has the status of a group safety publication in accordance with IEC Guide 104.

The text of this International Standard is based on the following documents:

FDIS	Report on voting
20/1801/FDIS	20/1818/RVD

Full information on the voting for the approval of this International Standard can be found in the report on voting indicated in the above table.

This document has been drafted in accordance with the ISO/IEC Directives, Part 2.

A list of all parts in the IEC 60332 series, published under the general title *Tests on electric and optical fibre cables under fire conditions*, can be found on the IEC website.

Future standards in this series will carry the new general title as cited above. Titles of existing standards in this series will be updated at the time of the next edition.

The committee has decided that the contents of this document will remain unchanged until the stability date indicated on the IEC website under "http://webstore.iec.ch" in the data related to the specific document. At this date, the document will be

- reconfirmed,
- withdrawn,
- replaced by a revised edition, or
- amended.

The contents of the interpretation sheet 1 of January 2019 have been included in this copy.

IMPORTANT – The “colour inside” logo on the cover page of this publication indicates that it contains colours which are considered to be useful for the correct understanding of its contents. Users should therefore print this publication using a colour printer.

Documents
Document Sharing Hub

Full document details: IEC 60332-3-24 2018 RLV

INTRODUCTION

IEC 60332-3-24 is part of a series of publications dealing with tests on electric and optical fibre cables under fire conditions.

The IEC 60332-1 and IEC 60332-2 series specify methods of test for flame spread characteristics for a single vertical insulated wire or cable. It cannot be assumed that, because a cable or wire meets the requirements of the IEC 60332-1 and IEC 60332-2 series, a vertical bunch of similar cables or wires will behave in a similar manner. This is because flame spread along a vertical bunch of cables depends on a number of features, such as

a) the volume of combustible material exposed to the fire and to any flame which may be produced by the combustion of the cables;

b) the geometrical configuration of the cables and their relationship to an enclosure;

c) the temperature at which it is possible to ignite the gases emitted from the cables;

d) the quantity of combustible gas released from the cables for a given temperature rise;

e) the volume of air passing through the cable installation;

f) the construction of the cable, for example armoured or unarmoured, multi- or single core.

All of the foregoing assume that the cables are able to be ignited when involved in an external fire.

The IEC 60332-3 series gives details of a test where a number of cables are bunched together to form various test sample installations. For easier use and differentiation of the various test categories, the parts are designated as follows:

Part 3-10: Apparatus

Part 3-21: Category A F/R

Part 3-22: Category A

Part 3-23: Category B

Part 3-24: Category C

Part 3-25: Category D

Parts from 3-21 onwards define the various categories and the relevant procedures. The categories are distinguished by test duration, the volume of non-metallic material of the test sample and the method of mounting the sample for the test. In all categories, cables having at least one conductor of cross-sectional area greater than 35 mm^2 are tested in a spaced configuration, whereas cables of conductor cross-sectional area of 35 mm^2 or smaller and optical fibre cables are tested in a touching configuration.

The categories are not necessarily related to different safety levels in actual cable installations. The actual installed configuration of the cables may be a major determinant in the level of flame spread occurring in an actual fire.

The method of mounting described as category A F/R (Part 3-21) is intended for special cable designs used in particular installations.

Categories A, B, C and D (Part 3-22 to Part 3-25 respectively) are for general use where different non-metallic volumes are applicable.

~~Additional categories, especially to cover the use of small diameter communication cables in closely bunched configurations, will be further considered when more data are available.~~

Documents
Document Sharing Hub

Full document details: IEC 60332-3-24 2018 RLV

TESTS ON ELECTRIC AND OPTICAL FIBRE CABLES UNDER FIRE CONDITIONS –

Part 3-24: Test for vertical flame spread of vertically-mounted bunched wires or cables – Category C

1 Scope

This part of IEC 60332 covers category C for methods of test for the assessment of vertical flame spread of vertically mounted bunched wires or cables, electrical or optical, under defined conditions.

This document relates to cables installed on the test ladder to achieve a nominal total volume of non-metallic material of 1,5 l/m of test sample. The flame application time is 20 min. The method of mounting uses the front of the standard ladder. The category is intended for general use where low volumes of non-metallic material are required to be evaluated.

The test is intended for type approval testing. The requirements for the selection of cables for testing are given in Annex A. The flame spread is measured as the extent of damage of the cable sample. This procedure ~~may~~ can be used to demonstrate the cable's ability to limit flame spread.

A recommended performance requirement is given in Annex B.

NOTE For the purposes of this document the term "electric wire or cable" covers all insulated metallic conductor cables used for the conveyance of energy or signals.

2 Normative references

The following documents are referred to in the text in such a way that some or all of their content constitutes requirements of this document. For dated references, only the edition cited applies. For undated references, the latest edition of the referenced document (including any amendments) applies.

IEC 60332-3-10, *Tests on electric and optical fibre cables under fire conditions – Part 3-10: Test for vertical flame spread of vertically-mounted bunched wires or cables – Apparatus*

~~IEC 60695-4: *Fire hazard testing – Part 4: Terminology concerning fire tests*~~

~~IEC 60811-1-3: *Insulating and sheathing materials of electric cables – Common test methods – Part 1: General application – Section 3: Methods for determining the density – Water absorption tests – Shrinkage test*~~

IEC 60811-606, *Electric and optical fibre cables – Test methods for non-metallic materials – Part 606: Physical tests – Methods for determining the density*

~~IEC Guide 104: *The preparation of safety publications and the use of basic safety publications and group safety publications*~~

3 Terms and definitions

For the purposes of this document, the following terms and definitions apply. ~~The definitions are taken from IEC 60695-4.~~

AVA Documents
Document Sharing Hub

ISO and IEC maintain terminological databases for use in standardization at the following addresses:

- IEC Electropedia: available at http://www.electropedia.org/
- ISO Online browsing platform: available at http://www.iso.org/obp

3.1
ignition source
source of energy that initiates combustion

[SOURCE: ISO 13943:2017, 3.219]

3.2
char
carbonaceous residue resulting from pyrolysis or incomplete combustion

[SOURCE: ISO 13943:2017, 3.47]

3.3
flame spread
propagation of a flame front

[SOURCE: ISO 13943:2017, 3.168]

4 Test apparatus

4.1 General

The apparatus specified in IEC 60332-3-10 shall be used.

4.2 Ignition source

The ignition source shall be one ribbon-type propane gas burner as specified in IEC 60332-3-10.

5 Test procedure

5.1 Test sample

The test sample shall comprise a number of test pieces of cable from the same production length, each having a minimum length of 3,5 m.

The total number of test pieces in the test sample shall be that number required to provide a nominal total volume of non-metallic material of 1,5 l/m of test sample.

The test sample for type approval shall be ~~chosen within the limitations given~~ in accordance with Annex A.

The test pieces forming the test sample shall be conditioned at a temperature of (20 ± 10) °C for at least 16 h before commencing the test. The test pieces shall be dry.

5.2 Determination of the number of test pieces

In order to calculate the appropriate number of test pieces, it is necessary to determine the volume per metre of non-metallic material of one test piece.

Documents
Document Sharing Hub

Full document details: IEC 60332-3-24 2018 RLV

A length of cable which shall be not less than 0,3 m long is carefully cut to ensure that the surfaces are at right angles to the cable axis, thus enabling precise measurements of its length.

The density of each non-metallic component (including cellular material) shall be measured in an appropriate way, for example ~~clause 8 of IEC 60811-1-3~~ according to IEC 60811-606, in order to obtain values expressed to the second decimal place.

Each non-metallic material C_i shall be removed from the test piece and weighed. Any non-metallic material making up less than 5 % of the total non-metallic mass of the test piece shall be assumed to have a density of 1,0 kg/dm^3.

Where semi-conducting screens cannot be removed from the insulating material, the components may be considered as one for the purpose of measuring their mass and density.

The volume V_i (litres per metre of cable) of each non-metallic material C_i is calculated as follows:

$$V_i = \frac{M_i}{\rho_i \times l}$$

where

M_i is the mass of the component C_i (kg);

ρ_i is the density of the component C_i (kg/dm^3);

l is the length of the test piece of cable (m).

The total volume, V, of the non-metallic materials contained in 1 m of cable is equal to the sum of the individual volumes V_1, V_2, etc.

The number of test pieces to be mounted is obtained by taking the closest integer (0,5 and above corresponding to 1) of ~~the number of test pieces to be mounted is obtained by dividing~~ the ratio of the volume per metre specified in 5.1 and the total volume, V, of non-metallic material per metre of cable, subject to a minimum number of two test pieces.

5.3 Mounting of the test sample

5.3.1 Cables having at least one conductor above 35 mm^2

For cables having at least one conductor with a cross-section exceeding 35 mm^2, each test piece shall be attached individually to each rung of the ladder by means of metal wire (steel or copper). For cables up to and including 50 mm diameter, use wire between 0,5 mm and 1,0 mm in diameter. For cables above 50 mm diameter, use wire between 1,0 mm and ~~1,5~~ 2,5 mm in diameter.

Test pieces shall be attached to the front of the standard ladder in a single layer up to a total maximum width of 300 mm with a space between each test piece of 0,5 times the cable diameter but not exceeding 20 mm (see Figure 1). There shall be a minimum distance of 50 mm between the edge of the test sample and the inside of the ladder uprights.

When mounting the test pieces, the first test piece shall be positioned approximately in the centre of the ladder and further test pieces added on either side so that the whole array of test pieces is approximately centred on the ladder.

Mount all test pieces on the ladder with the bending (due to bending of the cable on the reel), if any, in the same direction, towards the back side of the test chamber as much as possible.

Documents
Document Sharing Hub

Full document details: IEC 60332-3-24 2018 RLV

To achieve straight test pieces between the steel rungs below and above the burner position, it is permitted to fix the test pieces to an additional horizontal support 200 mm to 300 mm lower than the steel rung below the burner position.

NOTE The objective is to improve the repeatability and reproducibility of the test.

5.3.2 Cables having conductors 35 mm^2 and below and optical cables

For cables having all conductors with cross-sections of 35 mm^2 or smaller and optical cables, each test piece shall be attached, either individually or as part of an array, to each rung of the ladder by means of metal wire (steel or copper) between 0,5 mm and 1,0 mm in diameter.

Test pieces shall be attached to the front of the standard ladder in touching formation in one or more layers up to a maximum total width of 300 mm. There shall be a minimum distance of 50 mm between the edge of the test sample and the inside of the ladder uprights.

When mounting the test pieces, the first test piece or array of test pieces shall be positioned approximately in the centre of the ladder and further test pieces or arrays added on either side so that the test sample is approximately centred on the ladder.

Mount all test pieces on the ladder with the bending (due to bending of the cable on the reel), if any, in the same direction, towards the back side of the test chamber as much as possible.

To achieve straight test pieces between the steel rungs below and above the burner position, it is permitted to fix the test pieces to an additional horizontal support 200 mm to 300 mm lower than the steel rung below the burner position.

In order to ensure that the test pieces are straight on the ladder, the test pieces shall be maintained under tension manually while attaching the test pieces to the rung of the ladder by means of a metal wire.

NOTE The objective is to improve the repeatability and reproducibility of the test.

If a second (or more) layer of test pieces is required after the full width of the ladder has been utilized for the first (or following) layer, then the first test piece or array of test pieces in the second (or following) layer shall be positioned approximately in the centre of the ladder and further test pieces or arrays added on either side so that the second (or following) layer is approximately centred on the ladder.

If a large number of test pieces is required to make up a test sample, the test pieces may be attached to each rung of the ladder in flat arrays of cables of a maximum width of five test pieces using the specified metal wire. For consistency, it is recommended that adjacent arrays of cables are secured together at every rung to ensure that they are in touching formation (see Figure 2).

5.4 Flame application time

The test flame shall be applied for 20 min, after which it shall be extinguished. The air flow rate through the test chamber shall be maintained until cable burning or glowing has ceased, or until a maximum duration of 1 h, after which any remaining cable burning or glowing shall be extinguished.

6 Evaluation of test results

After all cable burning or glowing has ceased or been extinguished, the test sample shall be wiped clean.

Documents
Document Sharing Hub
Full document details: IEC 60332-3-24 2018 RLV

All soot is to be ignored if, when wiped off, the original surface is undamaged. Softening or any deformation of the non-metallic material is also to be ignored. The flame spread shall be measured as the extent of the damage. It shall be measured in metres to two decimal places from the bottom edge of the burner to the onset of char. The onset of char is determined as follows:

> press against the cable surface with a sharp object, for example a knife blade. Where the surface changes from a resilient to a brittle (crumbling) surface, this indicates the onset of char.

7 Performance requirements

The performance requirements for a particular type or class of wire or cable should preferably be given in the individual cable standard. In the absence of any given requirements, the recommended performance requirements given in Annex B should be used.

8 Retest procedure

In case of a disputed failure, two further tests shall be undertaken as detailed in Clause 5. The test shall be deemed as satisfactory if both tests meet the stated requirement.

9 Test report

The test report shall include the following information:

a) full description of the cable tested;
b) manufacturer of the cable tested;
c) the part of the standard against which the test was carried out;
d) the number of test pieces;
e) the total volume of non-metallic material, per metre of test sample, of the test pieces;
f) the method of mounting, (i.e. spaced or touching);
g) the number of layers and number of test pieces in each layer;
h) flame application time (i.e. 20 min);
i) the number of burners (i.e. one);
j) the extent of damage;
k) the time to extinction of all burning or glowing.

Documents
Document Sharing Hub
Full document details: IEC 60332-3-24 2018 RLV

Dimensions in millimetres

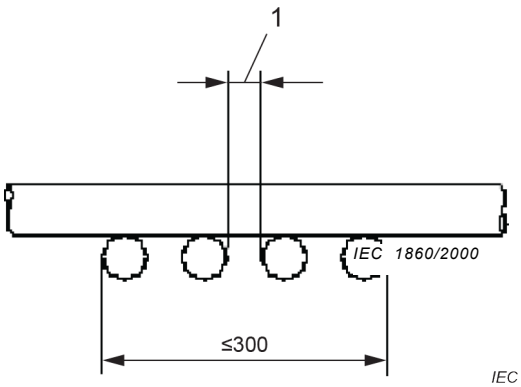

Key

1 spacing distance

Figure 1 – Spaced cables mounted on the front side of the standard ladder

Dimensions in millimetres

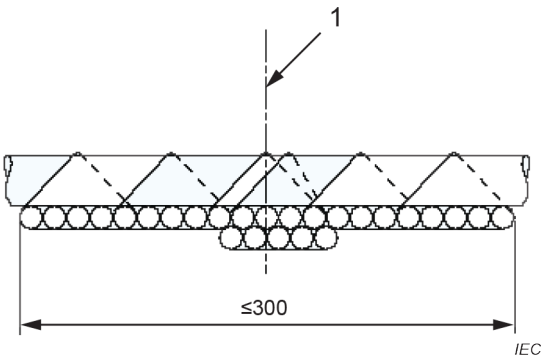

Key

1 centre line of the ladder

Figure 2 – Touching cables mounted on the front side of the standard ladder (arrays of cables in contact)

Documents
Document Sharing Hub
Full document details: IEC 60332-3-24 2018 RLV

Annex A
(normative)

Guidance on cable selection for type approval testing

The choice of cable type and conductor cross-section for type approval testing shall be as given in the cable specification, or as agreed between purchaser and manufacturer.

The limited capacity of the ladders requires consideration of the conductor cross-section selected for testing to ensure that the volume of non-metallic material can be accommodated within the ~~prescribed~~ specified method of mounting. Therefore, the selection of cables for this document shall comply with the following:

- only the front face of the ladder shall be used;
- for cables having a conductor cross-section greater than 35 mm^2 there shall not be more cables than the number necessary to form a single layer of 300 mm width, allowing for a space between each cable equal to half the cable diameter but not exceeding 20 mm;
- for cables having a conductor cross-section of 35 mm^2 or smaller and optical cables, there is no restriction on cable selection;
- the minimum number of test pieces shall be two.

A summary of all conditions for type approval testing to this document is given in Table A.1.

Table A.1 – Summary of test conditions

Category and designation	C	
Range of conductor cross-sections (mm^2)	> 35[a]	≤ 35[b]
Non-metallic volume per metre of test sample (l)	1,5	1,5
Use of standard ladder, maximum width of test sample: 300 mm – number of layers: – number of burners:	 1 1	 ≥ 1 1
Positioning of test pieces	Spaced	Touching
Flame application time (min)	20	20

[a] At least one conductor greater than 35 mm^2.

[b] No conductor cross-section exceeding 35 mm^2 or optical cable.

Documents
Document Sharing Hub
Full document details: IEC 60332-3-24 2018 RLV