IEC 60335-2-14

Edition 6.0 2016-06
REDLINE VERSION

INTERNATIONAL STANDARD

colour inside

Household and similar electrical appliances – Safety – Part 2-14: Particular requirements for kitchen machines

IEC 60335-2-14:2016-06 RLV(en)

Documents
Document Sharing Hub

Full document details: IEC 60335-2-14 2016 RLV

THIS PUBLICATION IS COPYRIGHT PROTECTED

Copyright © 2016 IEC, Geneva, Switzerland

All rights reserved. Unless otherwise specified, no part of this publication may be reproduced or utilized in any form or by any means, electronic or mechanical, including photocopying and microfilm, without permission in writing from either IEC or IEC's member National Committee in the country of the requester. If you have any questions about IEC copyright or have an enquiry about obtaining additional rights to this publication, please contact the address below or your local IEC member National Committee for further information.

IEC Central Office
3, rue de Varembé
CH-1211 Geneva 20
Switzerland

Tel.: +41 22 919 02 11
Fax: +41 22 919 03 00
info@iec.ch
www.iec.ch

About the IEC
The International Electrotechnical Commission (IEC) is the leading global organization that prepares and publishes International Standards for all electrical, electronic and related technologies.

About IEC publications
The technical content of IEC publications is kept under constant review by the IEC. Please make sure that you have the latest edition, a corrigenda or an amendment might have been published.

IEC Catalogue - webstore.iec.ch/catalogue
The stand-alone application for consulting the entire bibliographical information on IEC International Standards, Technical Specifications, Technical Reports and other documents. Available for PC, Mac OS, Android Tablets and iPad.

IEC publications search - www.iec.ch/searchpub
The advanced search enables to find IEC publications by a variety of criteria (reference number, text, technical committee,…). It also gives information on projects, replaced and withdrawn publications.

IEC Just Published - webstore.iec.ch/justpublished
Stay up to date on all new IEC publications. Just Published details all new publications released. Available online and also once a month by email.

Electropedia - www.electropedia.org
The world's leading online dictionary of electronic and electrical terms containing 20 000 terms and definitions in English and French, with equivalent terms in 15 additional languages. Also known as the International Electrotechnical Vocabulary (IEV) online.

IEC Glossary - std.iec.ch/glossary
65 000 electrotechnical terminology entries in English and French extracted from the Terms and Definitions clause of IEC publications issued since 2002. Some entries have been collected from earlier publications of IEC TC 37, 77, 86 and CISPR.

IEC Customer Service Centre - webstore.iec.ch/csc
If you wish to give us your feedback on this publication or need further assistance, please contact the Customer Service Centre: csc@iec.ch.

AVA Documents
Document Sharing Hub

Full document details: IEC 60335-2-14 2016 RLV

IEC 60335-2-14

Edition 6.0 2016-06
REDLINE VERSION

INTERNATIONAL STANDARD

colour inside

Household and similar electrical appliances – Safety – Part 2-14: Particular requirements for kitchen machines

INTERNATIONAL
ELECTROTECHNICAL
COMMISSION

ICS 13.120; 97.040.50

ISBN 978-2-8322-0000-0

Warning! Make sure that you obtained this publication from an authorized distributor.

® Registered trademark of the International Electrotechnical Commission

Documents
Document Sharing Hub

Full document details: IEC 60335-2-14 2016 RLV

CONTENTS

FOREWORD....4
INTRODUCTION....7
1 Scope....8
2 Normative references....9
3 Terms and definitions....9
4 General requirement....13
5 General conditions for the tests....13
6 Classification....13
7 Marking and instructions....13
8 Protection against access to live parts....15
9 Starting of motor-operated appliances....15
10 Power input and current....15
11 Heating....15
12 Void....18
13 Leakage current and electric strength at operating temperature....18
14 Transient overvoltages....18
15 Moisture resistance....18
16 Leakage current and electric strength....19
17 Overload protection of transformers and associated circuits....19
18 Endurance....19
19 Abnormal operation....19
20 Stability and mechanical hazards....20
21 Mechanical strength....27
22 Construction....27
23 Internal wiring....28
24 Components....28
25 Supply connection and external flexible cords....28
26 Terminals for external conductors....29
27 Provision for earthing....29
28 Screws and connections....29
29 Clearances, creepage distances and solid insulation....29
30 Resistance to heat and fire....30
31 Resistance to rusting....30
32 Radiation, toxicity and similar hazards....30
Annexes....34
Annex C (normative) Ageing test on motors....34
Annex R (normative) Software evaluation....35
Annex AA (normative) Tests on sieves of centrifugal juicers....36
Bibliography....38

Figure 101 – Slicing machine....31

AVA Documents
Document Sharing Hub

Full document details: IEC 60335-2-14 2016 RLV

Figure 102 – Protecting devices for slicing machines 32
Figure 103 – Schematic representation of the 30 ml spillage test 33

Documents
Document Sharing Hub

Full document details: IEC 60335-2-14 2016 RLV

INTERNATIONAL ELECTROTECHNICAL COMMISSION

HOUSEHOLD AND SIMILAR ELECTRICAL APPLIANCES – SAFETY –

Part 2-14: Particular requirements for kitchen machines

FOREWORD

1) The International Electrotechnical Commission (IEC) is a worldwide organization for standardization comprising all national electrotechnical committees (IEC National Committees). The object of IEC is to promote international co-operation on all questions concerning standardization in the electrical and electronic fields. To this end and in addition to other activities, IEC publishes International Standards, Technical Specifications, Technical Reports, Publicly Available Specifications (PAS) and Guides (hereafter referred to as "IEC Publication(s)"). Their preparation is entrusted to technical committees; any IEC National Committee interested in the subject dealt with may participate in this preparatory work. International, governmental and non-governmental organizations liaising with the IEC also participate in this preparation. IEC collaborates closely with the International Organization for Standardization (ISO) in accordance with conditions determined by agreement between the two organizations.

2) The formal decisions or agreements of IEC on technical matters express, as nearly as possible, an international consensus of opinion on the relevant subjects since each technical committee has representation from all interested IEC National Committees.

3) IEC Publications have the form of recommendations for international use and are accepted by IEC National Committees in that sense. While all reasonable efforts are made to ensure that the technical content of IEC Publications is accurate, IEC cannot be held responsible for the way in which they are used or for any misinterpretation by any end user.

4) In order to promote international uniformity, IEC National Committees undertake to apply IEC Publications transparently to the maximum extent possible in their national and regional publications. Any divergence between any IEC Publication and the corresponding national or regional publication shall be clearly indicated in the latter.

5) IEC itself does not provide any attestation of conformity. Independent certification bodies provide conformity assessment services and, in some areas, access to IEC marks of conformity. IEC is not responsible for any services carried out by independent certification bodies.

6) All users should ensure that they have the latest edition of this publication.

7) No liability shall attach to IEC or its directors, employees, servants or agents including individual experts and members of its technical committees and IEC National Committees for any personal injury, property damage or other damage of any nature whatsoever, whether direct or indirect, or for costs (including legal fees) and expenses arising out of the publication, use of, or reliance upon, this IEC Publication or any other IEC Publications.

8) Attention is drawn to the Normative references cited in this publication. Use of the referenced publications is indispensable for the correct application of this publication.

9) Attention is drawn to the possibility that some of the elements of this IEC Publication may be the subject of patent rights. IEC shall not be held responsible for identifying any or all such patent rights.

This redline version of the official IEC Standard allows the user to identify the changes made to the previous edition. A vertical bar appears in the margin wherever a change has been made. Additions are in green text, deletions are in strikethrough red text.

Documents
Document Sharing Hub

Full document details: IEC 60335-2-14 2016 RLV

International Standard IEC 60335-2-14 has been prepared by IEC technical committee 61: Safety of household and similar electrical appliances.

This sixth edition cancels and replaces the fifth edition published in 2006, its Amendment 1 (2008) and its Amendment 2 (2012). This edition constitutes a technical revision.

The principal changes in this edition as compared with the fifth edition of IEC 60335-2-14 are as follows (minor changes are not listed):

- requirements for **noodle makers** with a mixing function have been introduced (3.1.9.116, 11.7.118, 19.103);
- requirements for appliances having a feed screw or auger have been changed (20.106);
- the definition of normal operation has been changed (3.1.9);
- the method of carrying out the heating test has been changed (11.7);
- the requirement in 20.114 has been modified to align with the test specification;
- some notes in Subclauses 5.2, 11.7.107, 11.7.110, 11.7.116, 20.103, 20.107, 20.108, 20.117, 20.119, 25.14, and Annex AA were converted to normative text.

The text of this standard is based on the following documents:

FDIS	Report on voting
61/5136/FDIS	61/5172/RVD

Full information on the voting for the approval of this standard can be found in the report on voting indicated in the above table.

This publication has been drafted in accordance with the ISO/IEC Directives, Part 2.

This part 2 is to be used in conjunction with the latest edition of IEC 60335-1 and its amendments. It was established on the basis of the fifth edition (2010) of that standard.

NOTE 1 When “Part 1” is mentioned in this standard, it refers to IEC 60335-1.

This part 2 supplements or modifies the corresponding clauses in IEC 60335-1, so as to convert that publication into the IEC standard: Safety requirements for electric kitchen machines.

When a particular subclause of Part 1 is not mentioned in this part 2, that subclause applies as far as is reasonable. When this standard states "addition", "modification" or "replacement", the relevant text in Part 1 is to be adapted accordingly.

NOTE 2 The following numbering system is used:

– subclauses, tables and figures that are numbered starting from 101 are additional to those in Part 1;
– unless notes are in a new subclause or involve notes in Part 1, they are numbered starting from 101, including those in a replaced clause or subclause;
– additional annexes are lettered AA, BB, etc.

NOTE 3 The following print types are used:

– requirements: in roman type;
– *test specifications: in italic type*;
– notes: in small roman type.

Words in **bold** in the text are defined in Clause 3. When a definition concerns an adjective, the adjective and the associated noun are also in bold.

Documents
Document Sharing Hub

Full document details: IEC 60335-2-14 2016 RLV

The committee has decided that the contents of this publication will remain unchanged until the stability date indicated on the IEC website under "http://webstore.iec.ch" in the data related to the specific publication. At this date, the publication will be

- reconfirmed,
- withdrawn,
- replaced by a revised edition, or
- amended.

NOTE 4 The attention of National Committees is drawn to the fact that equipment manufacturers and testing organizations may need a transitional period following publication of a new, amended or revised IEC publication in which to make products in accordance with the new requirements and to equip themselves for conducting new or revised tests.

It is the recommendation of the committee that the content of this publication be adopted for implementation nationally not earlier than 12 months or later than 36 months from the date of publication.

The following differences exist in the countries indicated below.

– 3.1.9: Different loads are used (USA).
– 11.7: The operating times are different (USA).
– 19.7: The test is applicable to all appliances and the tests of 19.101 and 19.102 are not applicable (USA).
– Clause 20: Many of the tests are different (USA).
– 22.103: The test is not conducted (USA).
– 22.104: The specified probe is not applied to knife sharpeners (USA).
– 24.1.3: Switches are required to have 6000 cycles of operation (USA).
– 25.5: Type Z attachment is allowed for all appliances (USA).
– 25.14: The test is not conducted (USA).

IMPORTANT – The “colour inside” logo on the cover page of this publication indicates that it contains colours which are considered to be useful for the correct understanding of its contents. Users should therefore print this publication using a colour printer.

Documents
Document Sharing Hub

Full document details: IEC 60335-2-14 2016 RLV

INTRODUCTION

It has been assumed in the drafting of this International Standard that the execution of its provisions is entrusted to appropriately qualified and experienced persons.

This standard recognizes the internationally accepted level of protection against hazards such as electrical, mechanical, thermal, fire and radiation of appliances when operated as in normal use taking into account the manufacturer's instructions. It also covers abnormal situations that can be expected in practice and takes into account the way in which electromagnetic phenomena can affect the safe operation of appliances.

This standard takes into account the requirements of IEC 60364 as far as possible so that there is compatibility with the wiring rules when the appliance is connected to the supply mains. However, national wiring rules may differ.

If an appliance within the scope of this standard also incorporates functions that are covered by another part 2 of IEC 60335, the relevant part 2 is applied to each function separately, as far as is reasonable. If applicable, the influence of one function on the other is taken into account.

When a part 2 standard does not include additional requirements to cover hazards dealt with in Part 1, Part 1 applies.

NOTE 1 This means that the technical committees responsible for the part 2 standards have determined that it is not necessary to specify particular requirements for the appliance in question over and above the general requirements.

This standard is a product family standard dealing with the safety of appliances and takes precedence over horizontal and generic standards covering the same subject.

NOTE 2 Horizontal and generic standards covering a hazard are not applicable since they have been taken into consideration when developing the general and particular requirements for the IEC 60335 series of standards. For example, in the case of temperature requirements for surfaces on many appliances, generic standards, such as ISO 13732-1 for hot surfaces, are not applicable in addition to Part 1 or part 2 standards.

An appliance that complies with the text of this standard will not necessarily be considered to comply with the safety principles of the standard if, when examined and tested, it is found to have other features that impair the level of safety covered by these requirements.

An appliance employing materials or having forms of construction differing from those detailed in the requirements of this standard may be examined and tested according to the intent of the requirements and, if found to be substantially equivalent, may be considered to comply with the standard.

Documents
Document Sharing Hub

Full document details: IEC 60335-2-14 2016 RLV

HOUSEHOLD AND SIMILAR ELECTRICAL APPLIANCES – SAFETY –

Part 2-14: Particular requirements for kitchen machines

1 Scope

This clause of Part 1 is replaced by the following.

This part of IEC 60335 deals with the safety of electric kitchen machines for household and similar purposes, their **rated voltage** being not more than 250 V.

NOTE 101 Examples of appliances that are within the scope of this standard are

- bean slicers;
- berry-juice extractors;
- **blenders**;
- can openers;
- centrifugal juicers;
- churns;
- citrus-fruit squeezers;
- coffee mills not exceeding 500 g hopper capacity;
- cream whippers;
- egg beaters;
- **food mixers**;
- **food processors**;
- grain grinders not exceeding 3 l hopper capacity;
- graters;
- ice-cream machines, including those for use in refrigerators and freezers;
- knife sharpeners;
- knives;
- **mincers**;
- **noodle makers;**
- potato peelers;
- shredders;
- sieving machines;
- slicing machines.

Appliances intended for normal household and similar use and that may also be used by laymen in shops, in light industry and on farms, are within the scope of this standard. However, if the appliance is intended to be used professionally to process food for commercial consumption, the appliance is not considered to be for household and similar use only.

NOTE 102 Use of a kitchen machine in bed and breakfast premises, for example, is considered to be household use.

As far as is practicable, this standard deals with the common hazards presented by appliances which are encountered by all persons in and around the home. However, in general, it does not take into account

- ~~the use of appliances by young children or infirm~~ persons (including children) whose
  - physical, sensory or mental capabilities; or

AVA Documents
Document Sharing Hub

Full document details: IEC 60335-2-14 2016 RLV

- lack of experience and knowledge

  prevents them from using the appliance safely without supervision or instruction;

– children playing with the appliance ~~by young children~~.

NOTE 103 Attention is drawn to the fact that

– for appliances intended to be used in vehicles or on board ships or aircraft, additional requirements may be necessary;

– in many countries additional requirements are specified by the national health authorities, the national authorities responsible for the protection of labour and similar authorities.

NOTE 104 This standard does not apply to

– slicing machines having a circular knife the blade of which is inclined at an angle exceeding 45° to the vertical;

– food waste disposers (IEC 60335-2-16);

– ice-cream appliances with incorporated motor compressors (IEC 60335-2-24);

– kitchen machines intended for commercial purposes (IEC 60335-2-64);

– kitchen machines intended for industrial purposes;

– kitchen machines intended to be used in locations where special conditions prevail, such as the presence of a corrosive or explosive atmosphere (dust, vapour or gas).

2 Normative references

This clause of Part 1 is applicable except as follows.

Addition:

~~IEC 60811-1-4:1985, *Common Test methods for insulating and sheathing materials of electric cables – Part 1: Methods for general application – Section Four – tests at low temperature*~~
~~Amendment 1 (1993)~~
~~Amendment 2 (2001)~~

IEC 60811-504:2012, *Electric and optical fibre cables – Test methods for non-metallic materials – Part 504: Mechanical tests – Bending tests at low temperature for insulation and sheaths*

IEC 60811-505:2012, *Electric and optical fibre cables – Test methods for non-metallic materials – Part 505: Mechanical tests – Elongation at low temperature for insulations and sheaths*

3 Terms and definitions

This clause of Part 1 is applicable except as follows.

3.1.9 *Replacement:*

normal operation
operation of the appliance under the conditions specified in 3.1.9.101 to 3.1.9.119~~, or at **rated power input** if this is more unfavourable~~ followed by operation with the most unfavourable load indicated in the instructions.

~~NOTE 101~~ If the conditions are not specified, the appliance is operated with the most unfavourable load indicated in the instructions.

~~NOTE 102 **Rated power input** is obtained by applying a constant torque to the appliance placed in its normal position of use and without subjecting it to imbalance forces greater than those occurring in normal use.~~

~~NOTE 103 Operation at **rated power input** is considered to be more unfavourable if the power input determined during the test of 10.1 differs from the **rated power input** by more than~~

AVA Documents
Document Sharing Hub

~~– –20 % for appliances having a **rated power input** not exceeding 300 W;~~

~~– –15 % (or –60 W if greater) for appliances having a **rated power input** exceeding 300 W.~~

3.1.9.101 Berry-juice extractors are fed with 1 kg of berries, such as currants, gooseberries or grapes. Pushers are pressed with a force of 5 N against the berries.

3.1.9.102 **Food blenders** are operated with the bowl filled to its maximum indicated level with a mixture comprising two parts by mass of soaked carrots and three parts water. If this level is not indicated, the bowl is filled to two-thirds of its total capacity. The carrots are soaked in water for 24 h and cut so that the dimensions of the pieces do not exceed 15 mm. If the bowl is not provided, a cylindrical bowl is used which has a capacity of approximately 1 l and an inner diameter of approximately 110 mm.

Liquid blenders are operated with water instead of the mixture.

3.1.9.103 Can openers are operated with cans of tinned steel having a diameter of approximately 100 mm.

3.1.9.104 ~~Centrifugal~~ Juicers are operated with carrots that have been soaked in water for approximately 24 h. 5 kg of soaked carrots are gradually fed into juicers having separate outlets for the juice and residue. Other juicers are fed with batches of 0,5 kg of carrots, unless otherwise indicated in the instructions. Pushers are pressed with a force of 5 N against the carrots.

3.1.9.105 Cheese graters are operated with a 250 g piece of hard Parmesan cheese selected from a block of cheese about 16 months old and which has at least one plane surface. A force of 10 N is applied to the cheese unless the force is applied automatically.

3.1.9.106 Churns are filled with a mixture of eight parts by mass of heavy cream and one part of buttermilk. The quantity of the mixture is the maximum that allows the churn to operate without spillage.

3.1.9.107 Citrus-fruit squeezers are operated with orange halves pressed against the reamer with a force of 50 N.

3.1.9.108 Coffee mills having a separate container for collecting the ground coffee are operated with the hopper filled with roasted coffee beans.

Other coffee mills are operated with the hopper filled with the maximum quantity of roasted coffee beans stated in the instructions.

Note 1 to entry: If necessary, the coffee beans are conditioned for 24 h at a temperature of 30 °C ± 2 °C and a relative humidity of ~~(~~60 % ± 2~~)~~ %.

Controls are set to the position resulting in the smallest grain size.

3.1.9.109 Cream whippers and egg beaters are operated in water with 80 % of the length of the effective part immersed in a bowl of water.

3.1.9.110 **Food mixers** with beaters for mixing cake batter are operated with the beater blades as close as possible to the bottom of a bowl containing dry sand having a grain size between 170 µm and 250 µm. The height of the sand in the bowl is approximately 80 % of the length of the effective part of the beater.

Food mixers with kneaders for mixing yeast dough are operated with the kneaders in a bowl filled with a mixture of flour and water.

Documents
Document Sharing Hub
Full document details: IEC 60335-2-14 2016 RLV

Note 1 to entry: The flour has a protein content of ~~(~~10 % ± 1~~)~~ %, based on a negligible water content of the flour and without chemical additives.

Note 2 to entry: In case of doubt, the flour is more than two weeks but less than four months old. It is stored in plastic bags with as little air as possible.

The bowl is filled with a mass of flour in grams equal to 35 % of its capacity in cm^3, 72 g of water at a temperature of 25 °C ± 1 °C being added for each 100 g of flour.

Note 3 to entry: In case of doubt, the quantity of water is 1,2 times that necessary for the consistency of the mixture to be 500 Brabender units at 29 °C ± 1 °C, measured using a farinograph.

For **hand-held food mixers**, the kneaders are moved in a figure-of-eight movement at a rate of 10 to 15 movements per minute. The kneaders are to touch the wall of the bowl at opposite points and be in contact with the bottom of the bowl. If a bowl is not provided, a bowl is used that has a height of approximately 130 mm and an inner diameter of approximately 170 mm at the top, tapering down to approximately 150 mm at the bottom. Its inner surface is smooth and the wall and bottom blend smoothly.

3.1.9.111 **Food processors** are operated as specified for **food mixers** with kneaders for mixing yeast dough. However, the quantity of the mixture is the maximum stated in the instructions. If an accessory rotating at high speed is used to prepare the dough, only 60 g of water is used for each 100 g of flour.

Note 1 to entry: In case of doubt when using an accessory rotating at high speed, the quantity of water is that necessary for the consistency of the mixture to be 500 Brabender units at 29 °C ± 1 °C, measured using a farinograph.

Note 2 to entry: If instructions for mixing yeast dough are not provided, the **food processor** is operated using the recipe which results in the most unfavourable conditions.

3.1.9.112 Grain grinders are operated with the hopper filled with wheat, controls being set to the position resulting in the smallest grain size.

Note 1 to entry: If necessary, the wheat is conditioned for 24 h at a temperature of 30 °C ± 2 °C and a relative humidity of ~~(~~60 % ± 2~~)~~ %.

Note 2 to entry: Corn is used instead of wheat when instructions state that it can be ground.

3.1.9.113 Ice-cream machines are operated with a mixture of 60 % water, 30 % sugar, 5 % lemon juice and 5 % beaten egg white by mass. The quantity of the mixture is the maximum stated in the instructions. If there is no stated maximum, the container will be filled up to the maximum capacity.

Removable elements for cooling ice cream are pre-cooled for 24 h at –20 °C ± 5 °C.

For appliances cooled by ice, the cooling container is filled with ice in accordance with the instructions, 200 g of salt being added for each kg of ice.

Ice-cream machines for use in refrigerators and freezers are placed on thermal insulating material approximately 20 mm thick. They are operated without load at an ambient temperature of –4 °C ± 1 °C.

3.1.9.114 Knives are operated by slicing a length of hard sausage when measuring the power input. The sausage is approximately 55 mm in diameter and cut into slices approximately 5 mm thick, a force of approximately 10 N being applied to the knife. The sausage is stored for at least 4 h at a temperature of 23 °C ± 2 °C before slicing.

Note 1 to entry: Salami is a suitable hard sausage.

For the other tests, knives are operated with the cutting edge of the blade pressed against a length of soft wood having a cross-section approximately 50 mm × 100 mm. A force is

AVA Documents
Document Sharing Hub
Full document details: IEC 60335-2-14 2016 RLV

gradually applied to the knife until the power input measured when cutting the sausage is obtained.

3.1.9.115 **Mincers** are fed with sinewless, boneless and fatless beef that has been cut into pieces approximately 20 mm × 20 mm × 60 mm. Pushers are pressed with a force of 5 N against the meat.

Note 1 to entry: A brake may be used to apply the mean value of the load that is determined by mincing the meat for 2 min.

3.1.9.116 **Noodle makers** without a mixing function are fed with dough prepared from 225 g wheat flour, 1 egg (approximately 55 g), 15 ml cooking oil and 45 ml water. Pushers are pressed with a force of 5 N against the dough.

Noodle makers with a mixing function are fed with wheat flour and water in turn, 32 g water being used for each 100 g of wheat flour unless the instructions specify a more severe mixture. The quantity of the mixture is the maximum stated in the instructions.

3.1.9.117 Potato peelers of the container type are operated filled with water and potatoes. 5 kg of approximately spherical potatoes are used, each kilogram containing 12 to 15 potatoes.

Hand-held potato peelers are operated by peeling potatoes.

3.1.9.118 Vegetable graters and shredders are operated with carrots that have been soaked in water for approximately 24 h and cut into suitable pieces. Five batches, each containing 0,5 kg of soaked carrots, are used. Pushers are pressed with a force of 5 N against the carrots.

3.1.9.119 Bean slicers, knife sharpeners, sieving machines and slicing machines are operated without load.

3.101
food mixer
appliance intended for mixing food ingredients

3.102
food processor
appliance intended to finely chop batches of meat, cheese, vegetables and other foods by means of cutting blades rotating in a container

Note 1 to entry: Other functions may be performed by rotating blades, disks, paddles, or similar means used in place of the cutting blades.

Note 2 to entry: Choppers are considered to be **food processors**.

3.103
mincer
appliance intended to finely cut meat and other foods by the action of a feed screw, knives and perforated screens

3.104
biased-off switch
switch that automatically returns to the **off position** when its actuating member is released

Documents
Document Sharing Hub
Full document details: IEC 60335-2-14 2016 RLV

3.105
blender
appliance intended to pulverise solids, such as ice, vegetables or fruit, and to combine them into a blend, or to merge liquids and solids into a blend (**food blenders**) or to combine liquids only (**liquid blenders**)

3.106
cordless blender
blender incorporating a motor and which is connected to the supply and operated only when placed on its associated stand

3.107
noodle maker
appliance without a mixing function intended to make noodles by extrusion or other means or an appliance with a mixing function intended to make noodles by extrusion only

4 General requirement

This clause of Part 1 is applicable.

5 General conditions for the tests

This clause of Part 1 is applicable except as follows.

5.2 *Addition:*

~~NOTE 101~~ *Three additional coffee mills and grain grinders are required for the test of 19.102.*

~~NOTE 102~~ *The additional test of 25.14 is carried out on a separate appliance.*

~~*Modification:*~~

~~*Speed controls are adjusted in accordance with the instructions.*~~

6 Classification

This clause of Part 1 is applicable except as follows.

6.1 *Addition:*

Hand-held kitchen machines shall be **class II** or **class III**. However, they may be **class 0** or **class I** if their **rated voltage** does not exceed 150 V.

7 Marking and instructions

This clause of Part 1 is applicable except as follows.

7.1 *Modification:*

Appliances shall be marked with their **rated power input**.

Addition:

Documents
Document Sharing Hub

Full document details: IEC 60335-2-14 2016 RLV

Stands provided with **cordless blenders** shall be marked with

– the name, trademark or identification mark of the manufacturer or responsible vendor;

– the model or type reference.

7.12 *Addition:*

The instructions shall include the operating times ~~and speed settings~~ for accessories.

Accessories, other than those supplied with the appliance, shall include instructions for their safe use.

The instructions for slicing machines with a base having a plane surface underneath the sliding feed table shall include the substance of the following:

This appliance must be used with the sliding feed table and the piece holder in position unless this is not possible due to the size or shape of the food.

The instructions for **food processors** and **blenders** shall warn of potential injury from misuse. They shall state that care shall be taken when handling the sharp cutting blades, emptying the bowl and during cleaning and they shall include the substance of the following:

Be careful if hot liquid is poured into the food processor or blender as it can be ejected out of the appliance due to a sudden steaming.

The instructions for **hand-held blenders** shall include the substance of the following:

– always disconnect the blender from the supply if it is left unattended and before assembling, disassembling or cleaning;

– do not allow children to use the blender without supervision.

The instructions for centrifugal juicers shall include the substance of the following:

Do not use the appliance if the rotating sieve or the protecting cover is damaged or has visible cracks.

The instructions for **cordless blenders** shall state that the **blender** is only to be used with the stand provided.

If the **blender** and stand of the **cordless blender** can be lifted together by gripping the handle of the **blender**, the instructions shall include the substance of the following:

CAUTION Ensure that the blender is switched off before removing it from the stand.

The instructions shall include details on how to clean surfaces in contact with food.

The instructions for appliances incorporating a switch necessary for compliance with 22.40 shall include the substance of the following:

Switch off the appliance and disconnect from supply before changing accessories or approaching parts that move in use.

The instructions for **noodle makers** with a mixing function shall state the maximum quantity of ingredients that may be used.

The instructions shall include the substance of the following:

This appliance is intended to be used in household and similar applications such as:

– staff kitchen areas in shops, offices and other working environments;

Documents
Document Sharing Hub

Full document details: IEC 60335-2-14 2016 RLV

– farm houses;
– by clients in hotels, motels and other residential type environments;
– bed and breakfast type environments.

If the manufacturer wants to limit the use of the appliance to less than the above, this has to be clearly stated in the instructions.

8 Protection against access to live parts

This clause of Part 1 is applicable.

9 Starting of motor-operated appliances

This clause of Part 1 is not applicable.

10 Power input and current

This clause of Part 1 is applicable except as follows.

10.1 *Addition:*

Except for ***noodle makers*** *with a mixing function, a representative period is 2 min or the time specified in 11.7 for one cycle of operation, whichever is shorter.*

11 Heating

This clause of Part 1 is applicable except as follows.

11.7 *Replacement:*

The appliance is subjected to the tests of 11.7.1 and 11.7.2 and if necessary the test of 11.7.3.

11.7.1 *The appliance is operated for the period specified and where relevant the number of cycles as specified in 11.7.101 to 11.7.118.*

11.7.2 ~~*However, if this period exceeds that stated in the instructions and if the temperature rise limits of Table 3 are exceeded, the test is carried out with the maximum quantity of ingredients stated in the instructions*~~ *The appliance is operated for the number of cycles specified in 11.7.101 to 11.7.118 and using the maximum quantity of the load to be processed stated in the instructions, with operating periods as follows:*

– *for operating periods specified in the instructions not exceeding 7 min, the maximum period stated in the instructions plus 1 min or 7 min whichever is less;*
– *for operating periods specified in the instructions exceeding 7 min, the maximum period stated in the instructions.*

If it is necessary to perform a number of operations to obtain these periods, the rest periods are equal to, where relevant, the time taken to empty and refill the container with the maximum quantity of ingredients stated in the instructions.

Appliances incorporating a timer are operated for the maximum period allowed by the timer.

11.7.3 *If none of the power inputs used for the tests in 11.7.1 or 11.7.2 are*

Documents
Document Sharing Hub
Full document details: IEC 60335-2-14 2016 RLV

– *more than 80 % of **rated power input** for a **rated power input** not exceeding 300 W;*
– *more than **rated power input** minus 60 W for a **rated power input** between 300 W and 400 W;*
– *more than 85 % of **rated power input** for a **rated power input** exceeding 400 W,*

then the following test is carried out.

***Rated power input** is obtained by applying a constant torque to the appliance placed in its normal position of use and without subjecting it to imbalance forces greater than those occurring in normal use. The appliance is run with the relevant time period specified in 11.7.101 to 11.7.118.*

NOTE 101 For some functions of kitchen machines, the period for which **rated power input** is applied can be determined by first applying the load detailed in 3.1.9. For example

- the period in 11.7.104 is obtained using the load in 3.1.9.103;
- the period in 11.7.106 is obtained using the load in 3.1.9.105;
- the period in 11.7.108 is obtained using the load in 3.1.9.108;
- the period in 11.7.111 is obtained using the load in 3.1.9.111 (for **food processors** when instructions for mixing yeast dough are not provided);
- the period in 11.7.112 is obtained using the load in 3.1.9.112;
- the period in 11.7.116 is obtained using the load in 3.1.9.117 (for other than hand-held potato peelers);
- the period in 11.7.117 is obtained using the load in 3.1.9.118.

NOTE 102 When using **rated power input** as the load and if instructions for mixing yeast dough are provided, the number of cycles to be applied in 11.7.111 is found by first ascertaining the number of cycles necessary to process at least 1 kg of flour using the load in 3.1.9.111.

11.7.101 *Bean slicers, churns, sieving machines and slicing machines are operated for 30 min.*

11.7.102 *Berry-juice extractors and **mincers**~~ and noodle makers~~ are operated for 15 min.*

11.7.103 ***Blenders** that have to be kept switched on by hand and **hand-held blenders** are operated for 1 min with the control adjusted to the highest setting. The operation is carried out five times with rest periods of 1 min during which the mixture is replaced.*

*For other **blenders**, the period of operation is 3 min, the operation being carried out 10 times.*

11.7.104 *Can openers are operated until the can is fully open. This operation is carried out five times with rest periods of 15 s.*

11.7.105 ~~*Centrifugal*~~ *Juicers having separate outlets for the juice and residue are operated for~~ 30~~ 15 min.*

Other~~ centrifugal~~ juicers are operated for 2 min. The operation is carried out 10 times with rest periods of 2 min.

11.7.106 *Cheese graters are operated until the cheese is grated.*

11.7.107 *Citrus-fruit squeezers are operated for 15 s during which two halves of fruit are squeezed. The operation is carried out 10 times with rest periods of 15 s.*

~~NOTE 1~~ *The appliance is left idling during the rest periods unless it switches off automatically.*

NOTE~~ 2~~ If necessary, fruit residue is removed during the rest periods.

AVA Documents
Document Sharing Hub

Full document details: IEC 60335-2-14 2016 RLV

11.7.108 *Coffee mills having a separate container for collecting the ground coffee are operated until the container is full, unless the hopper is emptied first. This operation is carried out twice with a rest period of 1 min.*

Other coffee mills are operated until the coffee beans are completely ground or for 30 s if this is longer. The operation is carried out three times with rest periods of 1 min.

11.7.109 *Cream whippers and egg beaters are operated for 10 min with the control adjusted to the highest setting.*

11.7.110 ***Food mixers*** *with beaters for mixing cake batter are operated for 15 min unless they incorporate a* ***biased-off switch****, in which case they are operated for 5 min.*

Food mixers *with kneaders for mixing yeast dough are operated for*

– *5 min for* ***hand-held food mixers****;*
– *10 min for* ***other food mixers****.*

For the first 30 s, the control is adjusted to the lowest setting, after which the control is adjusted to the position for mixing yeast dough stated in the instructions.

~~NOTE~~ *If the mixing action automatically stops when the dough is ready, the test is terminated.*

11.7.111 ***Food processors*** *are operated with the setting of the control and for the period stated in the instructions for mixing yeast dough. This operation is carried out five times with a rest period of 2 min between each operation or for a sufficient number of times to process at least 1 kg of flour, whichever is less. However, at least two operations are performed, with a rest period of 2 min between each operation.*

If instructions for mixing yeast dough are not provided, the ***food processor*** *is operated under the most unfavourable conditions stated in the instructions. The operation is carried out three times with a rest period of 2 min between each operation.*

If the alternative test of 11.7 is carried out, the rest period is the time needed to empty and refill the container.

11.7.112 *Grain grinders are operated until 1 kg of wheat has been ground. The hopper of batch-fed grinders is refilled if necessary, with rest periods of 30 s.*

11.7.113 *Ice-cream machines for use in refrigerators and freezers are operated for 5 min, after which the stirrer is stalled for 25 min.*

Other ice-cream machines are operated for 30 min.

11.7.114 *Knife sharpeners are operated for 10 min.*

11.7.115 *Knives are operated for 15 min. The slicing operation is simulated at a rate of 10 slices per minute, the blades being unloaded for 2 s each time.*

11.7.116 *Potato peelers of the container type are operated until the potatoes are adequately peeled. Potatoes may be peeled in more than one batch. Peeling periods are separated by rest periods of 2 min.*

~~NOTE 1~~ *When checking that the potatoes are adequately peeled, eyes are ignored.*

~~NOTE 2~~ *Timers are reset if necessary.*

Hand-held potato peelers *are operated for 10 min.*

Documents
Document Sharing Hub

Full document details: IEC 60335-2-14 2016 RLV

11.7.117 *Shredders and vegetable graters are operated until a batch of carrots is shredded. The operation is carried out five times with rest periods of 2 min.*

11.7.118 ***Noodle makers*** *without a mixing function are operated for 15 min.*

Noodle makers *with a mixing function are operated two times or a sufficient number of times to process 1 kg of flour, whichever is greater. There shall be a 2 min rest period between each operation.*

11.8 *Modification:*

For ice-cream machines for use in refrigerators and freezers, the temperature rise values are increased by 30 K.

12 Void

13 Leakage current and electric strength at operating temperature

This clause of Part 1 is applicable.

14 Transient overvoltages

This clause of Part 1 is applicable.

15 Moisture resistance

This clause of Part 1 is applicable except as follows.

15.2 *Modification:*

Instead of overfilling the liquid container, the test is carried out as follows.

The liquid container of the appliance is completely filled with water containing approximately 1 % NaCl. The appliance is then supplied at ***rated voltage*** *and operated for 15 s. Lids are in position or removed, whichever is more unfavourable. During the test, the leakage current shall not exceed the values specified in Clause 13.*

Saline solution is then added to the liquid container until it is completely full again. A further quantity equal to 15 % of the capacity of the container or 0,25 l, whichever is greater, is poured in steadily over a period of 1 min.

Addition:

Water outlets for potato peelers are blocked.

For ***cordless blenders****, the test is carried out on a horizontal surface with the* ***blender*** *both on and off its stand.*

15.101 The connecting devices of stands for **cordless blenders** shall not be affected by water.

Compliance is checked by the following test.

Documents
Document Sharing Hub

Full document details: IEC 60335-2-14 2016 RLV

The stand is placed on a horizontal surface and 30 ml of water containing approximately 1 % NaCl is poured onto each connecting device. The solution is poured steadily through a tube having an inner diameter of 8 mm over a period of 2 s, the lower end of the tube being 200 mm above the connecting device.

NOTE A schematic representation of the test arrangement is shown in Figure 103.

The stand shall then withstand the dielectric strength test of 16.3.

16 Leakage current and electric strength

This clause of Part 1 is applicable.

17 Overload protection of transformers and associated circuits

This clause of Part 1 is applicable.

18 Endurance

This clause of Part 1 is not applicable.

19 Abnormal operation

This clause of Part 1 is applicable except as follows.

19.1 *Addition:*

The test of 19.7 is only applicable to coffee mills and grain grinders that have to be kept switched on by hand, berry-juice extractors, ***food blenders****, centrifugal juicers, churns,* ***food mixers****,* ***food processors****, ice-cream machines,* ***mincers****, and* ***noodle makers****.*

Coffee mills and grain grinders are also subjected to the test~~s~~ of 19.101. They are also subject to the test of 19.102 unless they have to be kept switched on by hand.

Noodle makers *with a mixing function are also subjected to the test of 19.103.*

19.7 *Addition:*

Coffee mills and grain grinders that have to be kept switched on by hand, berry-juice extractors, ***food blenders****, centrifugal juicers for fruit and vegetables,* ***food mixers****,* ***food processors*** *and* ***mincers*** *are operated for 30 s.*

~~*Grain grinders,*~~ ***Noodle makers*** ~~*and other coffee mills*~~ *are tested for 5 min.*

Churns and ice-cream machines are operated until steady conditions are established.

19.10 *Addition:*

The test is repeated with accessories in position but without additional load.

Coffee mills and grain grinders are only tested for 30 s.

19.11.2 *Addition:*

Documents
Document Sharing Hub
Full document details: IEC 60335-2-14 2016 RLV

*Appliances having a device with an **off position** obtained by electronic disconnection, or a device that can place the appliance in a stand-by mode, are turned off or placed in the stand-by mode and supplied at **rated voltage**.*

19.13 *Addition:*

*Appliances tested with an electronic switch in the **off position**, or in the stand-by mode, shall*

- *not become operational, or*
- *if they become operational, not result in a **dangerous malfunction** during or after the tests of 19.11.2.*

19.101 *Coffee mills and grain grinders are supplied at **rated voltage** and operated under **normal operation** five times with rest periods.*

The duration of the operating period is

- *for appliances incorporating a timer, the longest period allowed by the timer;*
- *for other appliances, as follows:*
  - *for coffee mills of the grinding type and grain grinders, 30 s longer than the time needed to fill the collecting container or the time required to empty the hopper, whichever is shorter;*
  - *for other coffee mills, 1 min.*

The duration of the rest period is

- *10 s, for appliances provided with a collecting container;*
- *60 s, for other appliances.*

The temperature of the windings shall not exceed the values shown in Table 8.

19.102 *Coffee mills and grain grinders are subjected to the following test that is carried out on three additional appliances.*

*Coffee mills are filled with 40 g of coffee beans to which are added two granite chips that pass through an 8 mm screen but not a 7 mm screen. Grain grinders are operated under **normal operation** but with two granite chips that pass through a 4 mm screen but not a 3 mm screen. The appliance is supplied at **rated voltage** and operated until grinding has been completed.*

If any of the motors stall, the original appliance is subjected to the test of 19.7 for a test period of 5 min.

19.103 ***Noodle makers** with a mixing function are fed with the maximum quantity of flour stated in the instruction and no water, and then operated for one operating cycle. During the test, 19.13 is applicable and the winding temperatures shall not exceed the values specified in 19.9.*

20 Stability and mechanical hazards

This clause of Part 1 is applicable except as follows.

20.2 *Addition:*

***Detachable accessories** are removed and covers are opened except that for*

Documents
Document Sharing Hub

Full document details: IEC 60335-2-14 2016 RLV

– *centrifugal juicers, the cover and the container for collecting the residue are in position;*
– *graters and shredders, this is only applicable to accessories that are removed while the appliance is in operation.*

NOTE 101 A feed pusher is an example of an accessory that is removed.

The test probe is not applied to

– *bean slicers;*
– *can openers;*
– *citrus juice squeezers;*
– ***food mixers**;*
– ***hand-held blenders**;*
– *ice-cream machines, including those for use in refrigerators and freezers;*
– *knife sharpeners;*
– *knives;*
– *potato peelers;*
– *sieving machines;*
– *slicing machines;*
– *the following parts of other appliances:*
  - *smooth shafts having a diameter not exceeding 8 mm, rotating at a speed not exceeding 1 500 r/min and driven by motors having an input not exceeding 200 W;*
  - *outlet sides of grating and shredding disks rotating at a speed not exceeding 1 500 r/min;*
  - *projections from the surface of grinding disks, cones and similar parts having a height less than 4 mm.*

NOTE 102 Accessible drive shafts that may not be in use when the appliance is in operation ~~may~~ can be protected by means of a collar or by being positioned in a recess.

The test probe is not applied to feed openings having a throat with the following dimensions:

– *a height of at least 100 mm, measured from the upper edge of the cutting blade;*
– *an average of the maximum and minimum cross-sectional dimensions of the feed opening that does not exceed 65,5 mm;*
– *a maximum cross-sectional dimension of the feed opening that does not exceed 76 mm.*

*For **blenders**, **detachable parts**, except lids, are not removed. The test is carried out with a test probe similar to that of test probe B of IEC 61032 but having a circular stop face with a diameter of 125 mm instead of the non-circular face, the distance between the tip of the test finger and the stop face being 100 mm.*

20.101 Accessories for cream whippers, egg beaters and **hand-held food mixers** shall not have knife edges, unless a suitable guard prevents accidental contact with their rotating parts.

It shall not be possible to release beaters, kneaders and similar accessories of **hand-held food mixers** by pressing a button or a similar action while the accessory is rotating at a speed exceeding 1 500 r/min.

Compliance is checked by inspection, by measurement and by manual test.

*If compliance relies on the operation of an **electronic circuit** the appliance is further tested as follows.*

AVA Documents
Document Sharing Hub
Full document details: IEC 60335-2-14 2016 RLV

*a) The appliance is supplied at **rated voltage** and operated under **normal operation**.*

The electromagnetic phenomena tests of 19.11.4.2 and 19.11.4.5 are then applied.

*Beaters, kneaders and similar accessories of **hand-held food mixers** shall not be released or be capable of being released by a single action during or after, as appropriate, the electromagnetic phenomena application.*

*b) The appliance is supplied at **rated voltage** and operated under **normal operation**.*

*The fault conditions in a) to g) of 19.11.2 are then applied one at a time to the **electronic circuit** monitoring the release mechanism.*

*Beaters, kneaders and similar accessories of **hand-held food mixers** shall not be released or be capable of being released by a single action during the test.*

*If the **electronic circuit** is programmable, the software shall contain measures to control the fault/error conditions specified in Table R.1 and is evaluated in accordance with the relevant requirements of Annex R.*

20.102 Blades of **hand-held blenders** shall be completely screened from above and shall not be able to touch a flat surface while rotating.

Compliance is checked by inspection and by applying a cylindrical rod from any position between the vertical and an angle of 45° to the upperside of the blending blade. The rod has a diameter of 8,0 mm ± 0,1 mm and unlimited length.

It shall not be possible to touch the blades with the end of the test rod.

20.103 **Hand-held blenders** other than **hand-held food mixers** provided with a **blender** attachment shall incorporate a **biased-off switch**, its actuating member being positioned in a recess or otherwise guarded to prevent accidental operation.

~~NOTE This requirement does not apply to **hand-held food mixers** provided with a **blender** attachment.~~

Compliance is checked by applying a cylindrical rod, having a diameter of 40 mm and a hemispherical end, to the actuating member of the switch. The test rod is applied with a force not exceeding 5 N. The appliance shall not operate.

20.104 It shall not be possible to inadvertently operate the cutting blades of **blenders**, other than **hand-held blenders**, when they are accessible.

*Compliance is checked by the following test applied to **blenders** other than **hand-held blenders**.*

*With **detachable parts** removed, if the cutting blades of the **blender** can be touched with the test probe specified for **blenders** in 20.2, it shall not be possible to operate the appliance.*

*Switches, other than **biased-off switches**, are placed in the on position and two simultaneous or sequential applications of test probe B of IEC 61032 are applied to **biased-off switches**, including interlock switches, with a force not exceeding 20 N in an attempt to operate the cutting blades.*

During the test, it shall not be possible to operate the appliance.

20.105 Centrifugal juicers shall be constructed so that covers do not open due to vibration.

Rotating parts shall be secured so that they are not liable to become loose during operation.

NOTE Fastening of screws and nuts in a direction opposite to the direction of rotation of the rotating parts is considered to be sufficient.

Documents
Document Sharing Hub

Full document details: IEC 60335-2-14 2016 RLV

If parts rotate faster than 5 000 r/min, **tools** for fastening them shall be such that covers can only be closed after the **tool** has been removed.

Teeth of grating disks shall have a height not exceeding 1,5 mm. Ejectors on filter drums shall not project by more than 4 mm.

A feed pusher that fills the throat of the hopper shall be provided.

Compliance is checked by inspection, by measurement and by manual test. A force of 5 N is applied to covers in the most unfavourable direction. They shall not open.

20.106 ~~For appliances having a feed screw, the maximum cross-sectional dimension of the hopper, measured at least 100 mm from the upper edge of the feed screw shall not exceed 45 mm. A feed pusher that fills the throat of the hopper shall be provided.~~

Appliances having a feed screw or an auger shall, as far as is compatible with the use and working of the appliance, provide adequate protection against personal injury in normal use. They shall be provided with a feed pusher.

Compliance is checked by inspection, by measurement and by the following test.

For appliances having only one opening for inserting food and applying the feed pusher, the maximum cross-sectional dimension of the opening, measured at least 100 mm from the upper edge of the feed screw or the auger shall not exceed 45 mm, or the feed screw or the auger of the appliance shall not be accessible to test probe B of IEC 61032 with the feed pusher not in position.

For appliances having different openings for inserting food and applying the feed pusher:

- *The maximum cross-sectional dimension of the opening for the feed pusher, measured at least 100 mm from the upper edge of the feed screw or the auger, shall not exceed 45 mm. The feed screw or the auger of the appliance shall not be accessible to test probe B of IEC 61032 with the pusher in position and not in position.*
- *The opening for inserting food shall have a construction such that direct access to the feed screw or the auger is prevented. It shall not be possible to touch the feed screw or auger with the test probe B of IEC 61032 with the pusher in position and not in position.*

20.107 Slicing machines, other than **fixed appliances** and those having a **biased-off switch**, shall incorporate means to hold the appliance in place and allow it to be released after use.

NOTE ~~1~~ Suction cups are suitable means to hold the appliance in place.

Compliance is checked by the following test.

The slicing machine is fixed to a plain glass plate placed on a horizontal surface.

~~NOTE 2~~ *The glass is prevented from sliding by a stop.*

A force of 30 N is applied horizontally to the appliance along the plane of the knife at a point 10 mm below the upper surface of the base carrying the sliding feed table.

The machine shall not move on the glass plate.

20.108 Slicing machines shall incorporate a guard surrounding the circular knife, its open sector being no larger than required for using the appliance, as shown in Figure 101.

Documents
Document Sharing Hub
Full document details: IEC 60335-2-14 2016 RLV

Knife guards shall be non-detachable unless the motor cannot be switched on after their removal. It shall not be possible to operate interlocks by means of test probe B of IEC 61032.

The angle of the upper part of the open sector (θ in Figure 102) shall not exceed 75°. However the angle may be increased to 90° if the exposed part of the knife exceeding 75° is screened from above.

The radial distance between the outer circumference of the knife and the knife guard (*a* in Figure 102) shall not exceed

– 2 mm, if the guard is flush with the plane of the knife;
– 3 mm, if the guard projects at least 0,2 mm beyond the plane of the knife.

NOTE 1 The distance between the plane of the knife and the projection of the guard is shown as *b* in Figure 102.

When the thickness of the slices is set to zero, the distance between the outer circumference of the knife and the plate that sets the thickness of the slices (*c* in Figure 102) shall not exceed 6 mm. At the upper and lower points of the open sector, the distance between the plate that sets the thickness of the slices and any other protecting part (*e* in Figure 102) shall not exceed 5 mm.

~~NOTE 2~~ If the distance "*e*" is shielded, the limit does not apply.

Additional guarding shall be provided if slices thicker than 15 mm can be cut.

NOTE 2 An extension of the upper end of the plate that sets the thickness of the slices or an extension of the knife guard are examples of additional guarding.

Slicing machines shall incorporate a sliding feed table with a hand rest, a thumb guard and a piece holder. The thumb guard shall screen the full height of the open sector and be constructed so that the other fingers remain at least 30 mm away from the knife (*f* in Figure 102). The distance between the plane of the thumb guard and the knife (*d* in Figure 102) shall not exceed 5 mm. At the end of the forward movement of the sliding feed table, the thumb guard shall project at least 8 mm beyond the outer circumference of the knife.

The piece holder shall allow small pieces of food to be sliced and shall be capable of holding food, for example by spikes having a height of approximately 1,5 mm. It shall have a length of at least 120 mm and a height of at least 70 mm and shall project at least 20 mm beyond the hand rest.

The support for the sliding feed table shall not be usable for supporting food if

– the knife has a diameter exceeding 170 mm, or
– the no-load speed of the knife exceeds 200 r/min, or
– the **rated power input** exceeds 200 W.

Compliance is checked by inspection, by measurement and by manual test.

20.109 Slicing machines shall be constructed so that accidental operation of the appliance is prevented.

NOTE The requirement may be met by using a pull-on switch.

If a push-button, toggle, rocker or slide switch is used, the force necessary to actuate it shall be at least 2 N and the actuating member shall be recessed. However, the actuating member of a slide switch need not be recessed if the force is at least 5 N and is located so that unintentional actuation of the switch is unlikely.

Documents
Document Sharing Hub
Full document details: IEC 60335-2-14 2016 RLV

Compliance is checked by applying a cylindrical rod, having a diameter of 40 mm and a hemispherical end, to the actuating member of the switch. The test rod is applied with a force not exceeding 5 N. The appliance shall not operate.

20.110 The cutting blades of bean slicers shall be at least 30 mm from the plane of the inlet opening. The length of the major and minor axis of the inlet and outlet openings shall not exceed 30 mm and 15 mm. However, the dimensions of the outlet openings are not limited if a finger cannot be drawn in and a piece of stiff paper is not cut when inserted into the outlet opening.

Compliance is checked by measurement and by manual test.

20.111 The rotating parts of **blenders**, graters and shredders shall be secured so that they are not liable to become loose during operation.

NOTE Fastening of screws and nuts in a direction opposite to the direction of rotation of the rotating parts is considered to be sufficient.

A feed pusher that fills the throat of the hopper shall be provided.

Compliance is checked by inspection and by manual test.

20.112 The cutting blade of **food processors** shall stop within 1,5 s after the lid has been opened or removed.

Compliance is checked by operating the appliance without load and at the highest speed.

20.113 The lid interlock of **food processors** shall be constructed so that accidental operation of the appliance is prevented. Lid interlock switches shall be **biased-off switches**.

If there is an interlock between the lid and the main switch, the lid shall be locked when the switch is in the on position. When the lid is not correctly closed, the switch shall be locked in the **off position**.

Compliance is checked by inspection, by manual test and by applying test probe B of IEC 61032.

20.114 Access to dangerous moving parts of **food processors** shall be prevented for all combinations of assembly of **detachable parts** that ~~allow the motor to operate~~ may occur in use.

Compliance is checked by the following test.

Detachable parts *are removed or assembled incorrectly in a manner that ~~can~~ may occur in use, such as the incorrect location or misalignment of the parts.*

A force not exceeding 5 N is applied to the parts in any direction and it shall not be possible to touch dangerous moving parts with test probe B of IEC 61032.

20.115 Knives shall incorporate a **biased-off switch** that is recessed or guarded to prevent accidental operation.

Compliance is checked by applying a cylindrical rod, having a diameter of 40 mm and a hemispherical end, to the actuating member of the switch. The test rod is applied with a force not exceeding 5 N. The appliance shall not operate.

AVA Documents
Document Sharing Hub

Full document details: IEC 60335-2-14 2016 RLV

20.116 Centrifugal juicers for fruit and vegetables shall be constructed so that parts cannot become disengaged when the appliance is operated at high speed.

Compliance is checked by the following test that is carried out without load.

*The appliance with the lid removed is supplied at **rated voltage** with the control adjusted to give the highest speed. The appliance is operated 10 times.*

No part of the appliance shall become disengaged.

The appliance is operated again but with the lid in position. When the speed reaches its maximum value, an attempt is made to remove the lid. The test is carried out 10 times.

No part of the appliance shall become disengaged.

20.117 Centrifugal juicers having a rotating sieve retained by a rim of plastic material shall withstand the stresses resulting from parts rotating at high speed.

Compliance is checked by the following test that is carried out on three new appliances ~~or~~ and by testing the sieve in accordance with Annex AA.

*The rim of plastic material retaining the rotating sieve is cut. The appliance is supplied at **rated voltage** and operated with the sieve and lid placed as in normal use. Speed controls are set to the highest position.*

If the sieve retains its structure, the rim is cut further and the test repeated until disintegration takes place.

~~NOTE~~ *The damage to the rim and if necessary the mesh is increased gradually so that disintegration of the sieve takes place at high velocity.*

During the test, parts shall not be ejected from the appliance.

20.118 The operation of cordless appliances incorporating cutting blades that are accessible to test probe B of IEC 61032 shall require two separate movements unless the control device is not directly accessible to the probe.

NOTE A movement of two control devices or the movement of the same device in two different directions are examples of two separate movements.

Compliance is checked by inspection and by manual test.

20.119 The bowl and cutting blades of **food blenders** and **hand-held blenders** shall have adequate mechanical strength.

Compliance is checked by the following test.

Ice cubes with sides of about 20 mm and at a temperature of about –18 °C are placed in the bowl. The number of cubes is equal to 0,025 times the capacity of the bowl, in cm³, rounded up to a whole number.

~~NOTE 1~~ *The capacity of the bowl, without any detachable blade, is determined by the maximum quantity of water that it can contain without overflowing. Any hole provided for the driving spindle is blocked. For **hand held blenders** delivered without a bowl, the bowl defined in 3.1.9.110 is used.*

Documents
Document Sharing Hub
Full document details: IEC 60335-2-14 2016 RLV

*The appliance is supplied at **rated voltage** and is operated continuously or intermittently in order to obtain the best crushing results.*

~~NOTE 3~~ *Care is taken to ensure that the blade is not jammed by the ice cubes.*

*For **blenders** incorporating a timer, the test is carried out for the maximum period provided by the timer. For other **blenders**, the test is carried out for a period related to the maximum operating period specified in the instructions as follows:*

– *for durations not exceeding 7 min, the maximum period specified plus 1 min;*
– *for durations exceeding 7 min, the maximum period specified.*

After the test, the bowl and cutting blades shall not be broken,

~~NOTE 2~~ *distorted or blunt edges ~~are~~ being ignored.*

21 Mechanical strength

This clause of Part 1 is applicable except as follows.

21.1 *Addition:*

*This test is also carried out on **detachable parts** that are necessary for protection against mechanical hazards.*

22 Construction

This clause of Part 1 is applicable except as follows.

~~**22.40** *Addition:*~~

~~Any switch controlling the motor shall also disconnect **electronic circuits**, the malfunction of which would impair compliance with this standard.~~

~~*Compliance is checked during the tests of Clause 19.*~~

22.101 Appliances shall be constructed so that lubricants are prevented from polluting food compartments.

Compliance is checked by inspection.

22.102 Appliances shall be constructed so that food or liquids are prevented from penetrating into places that could cause electrical or mechanical faults.

Compliance is checked by inspection.

22.103 The appliance coupler of **cordless blenders** shall be constructed to withstand the stresses occurring during normal use.

Compliance is checked by the following test.

*The two live pins of the **blender** are connected together and an external resistive load is connected in series with the supply. The external load is such that the current is 1,1 times **rated current**.*

Documents
Document Sharing Hub
Full document details: IEC 60335-2-14 2016 RLV

*The **blender** is placed on its stand and withdrawn 10 000 times at a rate of approximately 10 times per minute. The test is continued for a further 10 000 times without current flowing.*

If the connection contacts cannot be energized when making or breaking the connection, instead of the above sequence, the test is carried out 20 000 times without current.

*After the test, the **blender** shall be suitable for further use and compliance with 8.1, 16.3, 27.5 and Clause 29 shall not be impaired.*

22.104 Knife sharpeners shall be constructed so that knife blades are prevented from penetrating into areas that could cause an electrical or mechanical hazard.

Compliance is checked by the following test.

Test probe D of IEC 61032 is inserted in any position through openings intended for sharpening. It shall not be possible to touch live parts, electrical insulation or moving parts, other than a grinding wheel.

23 Internal wiring

This clause of Part 1 is applicable.

24 Components

This clause of Part 1 is applicable except as follows.

24.1.3 *Modification:*

Switches incorporated in the following appliances are tested for 3 000 cycles of operation:

- *bean slicers;*
- ***liquid blenders**;*
- *cheese graters;*
- *graters;*
- *ice-cream machines for use in refrigerators and freezers;*
- *sieving machines;*
- *shredders.*

25 Supply connection and external flexible cords

This clause of Part 1 is applicable except as follows.

25.1 *Addition:*

Ice-cream machines for use in refrigerators and freezers and **hand-held appliances** shall not incorporate an appliance inlet.

25.5 *Addition:*

Type Z attachment is allowed for

- can openers;

Documents
Document Sharing Hub

Full document details: IEC 60335-2-14 2016 RLV

- coffee mills and grain grinders having a mass not exceeding 1,5 kg;
- cream whippers;
- egg beaters;
- ice-cream machines including those for use in refrigerators and freezers;
- knife sharpeners.

Type X attachments, other than those with a specially prepared cord, shall not be used for ice-cream machines for use in refrigerators and freezers.

25.7 *Addition:*

Polyvinyl chloride sheathed **supply cords** of ice-cream machines for use in refrigerators and freezers shall be resistant to low temperatures.

Compliance is checked by the tests of 4.2 and 4.3 of IEC ~~60811-1-4~~ 60811-504:2012 and 4.2 of IEC 60811-505.2012, these tests being carried out at a temperature of –25 °C ± 2 °C.

25.14 *Addition:*

Hand-held blenders *and* ***hand-held mixers*** *are also subjected to the following test while mounted on an apparatus similar to that of Figure 8.*

~~NOTE 101~~ *The appliance is mounted so that the direction of flexing corresponds to that most likely to occur when the* ***supply cord*** *is wound around it for storage.*

The ***supply cord*** *is suspended vertically from the appliance and loaded so that a force of 10 N is applied. The oscillating part is moved through an angle of 180° and back to the initial position. The number of flexings is 2 000, the rate of flexing being six per minute.*

25.22 *Addition:*

Appliance inlets shall be located so that pollution by food or liquid is unlikely to occur during normal use.

26 Terminals for external conductors

This clause of Part 1 is applicable.

27 Provision for earthing

This clause of Part 1 is applicable.

28 Screws and connections

This clause of Part 1 is applicable.

29 Clearances, creepage distances and solid insulation

This clause of Part 1 is applicable except as follows.

29.2 *Addition:*

Documents
Document Sharing Hub
Full document details: IEC 60335-2-14 2016 RLV

The microenvironment is pollution degree 3 unless the insulation is enclosed or located so that it is unlikely to be exposed to pollution during normal use of the appliance.

30 Resistance to heat and fire

This clause of Part 1 is applicable except as follows.

30.1 *Modification:*

For ice-cream machines for use in refrigerators and freezers, the temperature of 40 °C is replaced by 10 °C.

30.2 *Addition:*

For churns and ice-cream machines, 30.2.3 is applicable. For other appliances, 30.2.2 is applicable.

31 Resistance to rusting

This clause of Part 1 is applicable.

32 Radiation, toxicity and similar hazards

This clause of Part 1 is applicable.

Documents
Document Sharing Hub

Full document details: IEC 60335-2-14 2016 RLV

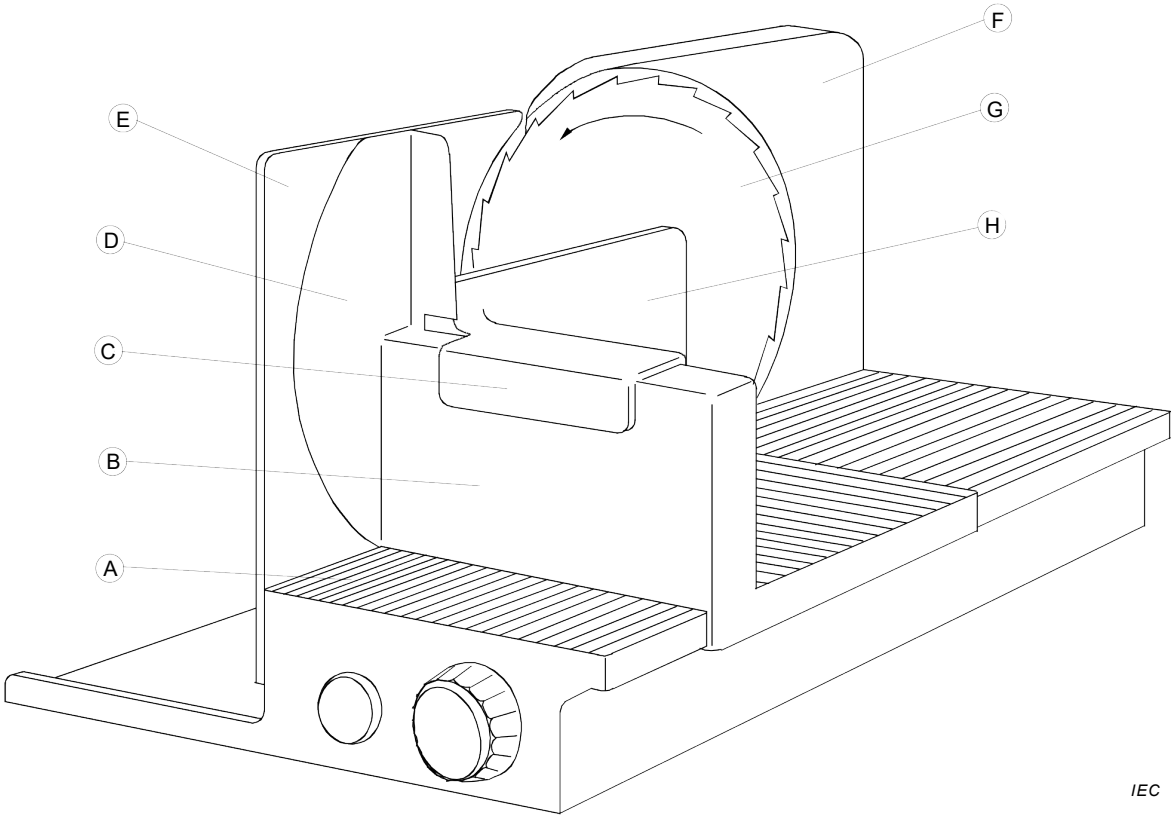

Key

A support

B sliding feed table

C hand rest

D thumb guard

E plate that sets the thickness of the slices

F blade guard

G rotating blade

H piece holder

Figure 101 – Slicing machine

Documents
Document Sharing Hub

Full document details: IEC 60335-2-14 2016 RLV

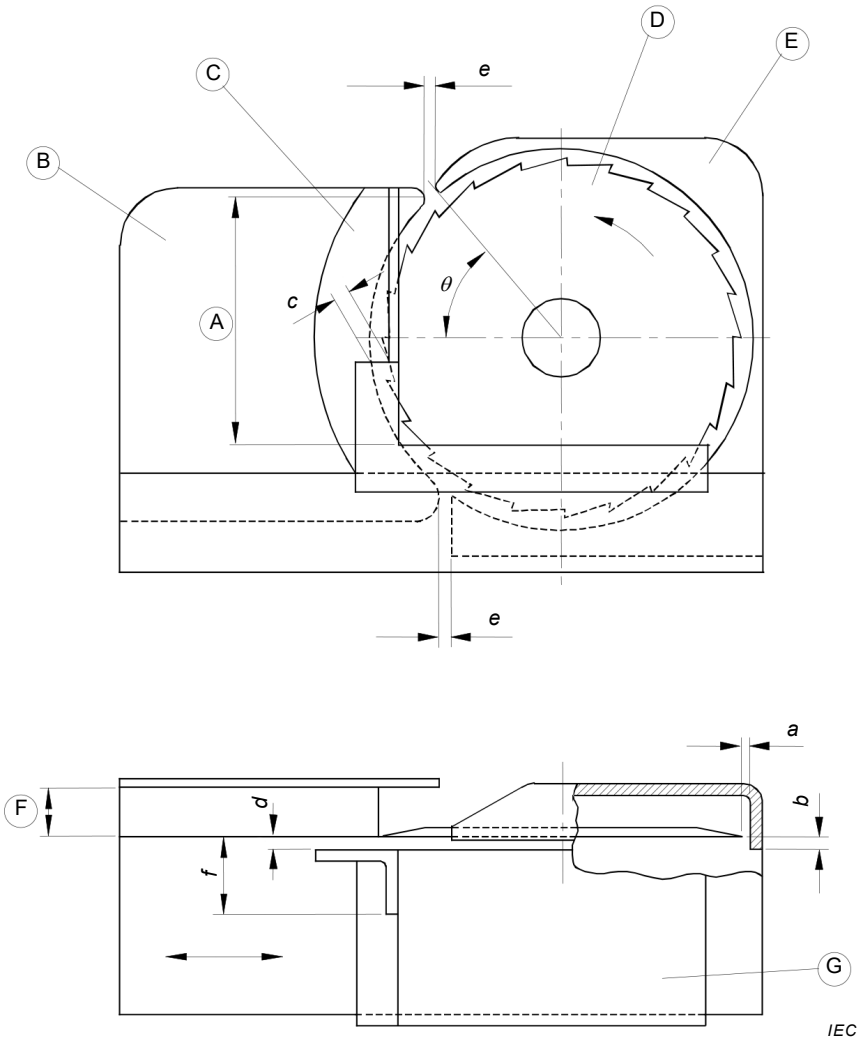

Key

A full height of the open section

B plate that sets the thickness of the slices

C thumb guard

D rotating blade

E blade guard

F thickness of slices

G sliding feed table

NOTE The dimensions are explained in 20.108.

Figure 102 – Protecting devices for slicing machines

Documents
Document Sharing Hub
Full document details: IEC 60335-2-14 2016 RLV

Dimensions in millimetres

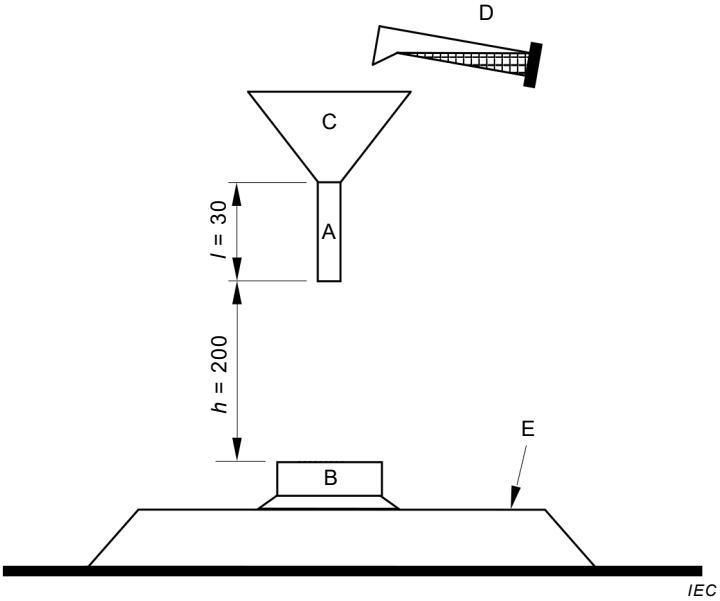

Key

A funnel tube with inner diameter of 8 mm

B item under test

C funnel

D container with 30 ml of saline solution

E horizontal surface

Figure 103 – Schematic representation of the 30 ml spillage test

Documents
Document Sharing Hub
Full document details: IEC 60335-2-14 2016 RLV