IEC 60335-2-2

Edition 7.0 2019-05
REDLINE VERSION

INTERNATIONAL STANDARD

colour inside

Household and similar electrical appliances – Safety – Part 2-2: Particular requirements for vacuum cleaners and water-suction cleaning appliances

IEC 60335-2-2:2019-05 RLV(en)

AVA Documents
Document Sharing Hub

Full document details: IEC 60335-2-2 2019 RLV

THIS PUBLICATION IS COPYRIGHT PROTECTED
Copyright © 2019 IEC, Geneva, Switzerland

All rights reserved. Unless otherwise specified, no part of this publication may be reproduced or utilized in any form or by any means, electronic or mechanical, including photocopying and microfilm, without permission in writing from either IEC or IEC's member National Committee in the country of the requester. If you have any questions about IEC copyright or have an enquiry about obtaining additional rights to this publication, please contact the address below or your local IEC member National Committee for further information.

IEC Central Office
3, rue de Varembé
CH-1211 Geneva 20
Switzerland

Tel.: +41 22 919 02 11
info@iec.ch
www.iec.ch

About the IEC
The International Electrotechnical Commission (IEC) is the leading global organization that prepares and publishes International Standards for all electrical, electronic and related technologies.

About IEC publications
The technical content of IEC publications is kept under constant review by the IEC. Please make sure that you have the latest edition, a corrigendum or an amendment might have been published.

IEC publications search - webstore.iec.ch/advsearchform
The advanced search enables to find IEC publications by a variety of criteria (reference number, text, technical committee,…). It also gives information on projects, replaced and withdrawn publications.

IEC Just Published - webstore.iec.ch/justpublished
Stay up to date on all new IEC publications. Just Published details all new publications released. Available online and once a month by email.

IEC Customer Service Centre - webstore.iec.ch/csc
If you wish to give us your feedback on this publication or need further assistance, please contact the Customer Service Centre: sales@iec.ch.

Electropedia - www.electropedia.org
The world's leading online dictionary on electrotechnology, containing more than 22 000 terminological entries in English and French, with equivalent terms in 16 additional languages. Also known as the International Electrotechnical Vocabulary (IEV) online.

IEC Glossary - std.iec.ch/glossary
67 000 electrotechnical terminology entries in English and French extracted from the Terms and Definitions clause of IEC publications issued since 2002. Some entries have been collected from earlier publications of IEC TC 37, 77, 86 and CISPR.

Documents
Document Sharing Hub

Full document details: IEC 60335-2-2 2019 RLV

IEC 60335-2-2

Edition 7.0 2019-05
REDLINE VERSION

INTERNATIONAL STANDARD

colour inside

Household and similar electrical appliances – Safety – Part 2-2: Particular requirements for vacuum cleaners and water-suction cleaning appliances

INTERNATIONAL
ELECTROTECHNICAL
COMMISSION

ICS 13.120; 97.080

ISBN 978-2-8322-6951-0

Warning! Make sure that you obtained this publication from an authorized distributor.

® Registered trademark of the International Electrotechnical Commission

Documents
Document Sharing Hub

Full document details: IEC 60335-2-2 2019 RLV

CONTENTS

FOREWORD 4
INTRODUCTION 7
1 Scope 8
2 Normative references 9
3 Terms and definitions 9
4 General requirement 11
5 General conditions for the tests 11
6 Classification 11
7 Marking and instructions 12
8 Protection against access to live parts 13
9 Starting of motor-operated appliances 14
10 Power input and current 14
11 Heating 14
12 Void 15
13 Leakage current and electric strength at operating temperature 15
14 Transient overvoltages 15
15 Moisture resistance 15
16 Leakage current and electric strength 17
17 Overload protection of transformers and associated circuits 17
18 Endurance 17
19 Abnormal operation 17
20 Stability and mechanical hazards 19
21 Mechanical strength 19
22 Construction 21
23 Internal wiring 22
24 Components 22
25 Supply connection and external flexible cords 22
26 Terminals for external conductors 23
27 Provision for earthing 23
28 Screws and connections 23
29 Clearances, creepage distances and solid insulation 23
30 Resistance to heat and fire 23
31 Resistance to rusting 24
32 Radiation, toxicity and similar hazards 24
Annexes 28
Annex B (normative) Appliances powered by rechargeable batteries that are recharged in the appliance 29
Annex C (normative) Ageing test on motors 32
Annex R (normative) Software evaluation 33
Annex S (normative) Battery-operated appliances powered by batteries that are non-rechargeable or not recharged in the appliance 34
Bibliography 37

AVA Documents
Document Sharing Hub

Figure 101 – Apparatus for testing the abrasion resistance of current-carrying hoses 25
Figure 102 – Apparatus for testing the resistance to flexing of current-carrying hoses 26
Figure 103 – Configuration of the hose for the freezing treatment 26
Figure 104 – Flexing positions for the hose after removal from the freezing cabinet 27
Figure 105 – Probe for measuring surface temperatures 27

Table 101 – Maximum temperature rises for specified accessible external surfaces under normal operating conditions 15

Documents
Document Sharing Hub

Full document details: IEC 60335-2-2 2019 RLV

INTERNATIONAL ELECTROTECHNICAL COMMISSION

HOUSEHOLD AND SIMILAR ELECTRICAL APPLIANCES – SAFETY –

Part 2-2: Particular requirements for vacuum cleaners and water-suction cleaning appliances

FOREWORD

1) The International Electrotechnical Commission (IEC) is a worldwide organization for standardization comprising all national electrotechnical committees (IEC National Committees). The object of IEC is to promote international co-operation on all questions concerning standardization in the electrical and electronic fields. To this end and in addition to other activities, IEC publishes International Standards, Technical Specifications, Technical Reports, Publicly Available Specifications (PAS) and Guides (hereafter referred to as "IEC Publication(s)"). Their preparation is entrusted to technical committees; any IEC National Committee interested in the subject dealt with may participate in this preparatory work. International, governmental and non-governmental organizations liaising with the IEC also participate in this preparation. IEC collaborates closely with the International Organization for Standardization (ISO) in accordance with conditions determined by agreement between the two organizations.
2) The formal decisions or agreements of IEC on technical matters express, as nearly as possible, an international consensus of opinion on the relevant subjects since each technical committee has representation from all interested IEC National Committees.
3) IEC Publications have the form of recommendations for international use and are accepted by IEC National Committees in that sense. While all reasonable efforts are made to ensure that the technical content of IEC Publications is accurate, IEC cannot be held responsible for the way in which they are used or for any misinterpretation by any end user.
4) In order to promote international uniformity, IEC National Committees undertake to apply IEC Publications transparently to the maximum extent possible in their national and regional publications. Any divergence between any IEC Publication and the corresponding national or regional publication shall be clearly indicated in the latter.
5) IEC itself does not provide any attestation of conformity. Independent certification bodies provide conformity assessment services and, in some areas, access to IEC marks of conformity. IEC is not responsible for any services carried out by independent certification bodies.
6) All users should ensure that they have the latest edition of this publication.
7) No liability shall attach to IEC or its directors, employees, servants or agents including individual experts and members of its technical committees and IEC National Committees for any personal injury, property damage or other damage of any nature whatsoever, whether direct or indirect, or for costs (including legal fees) and expenses arising out of the publication, use of, or reliance upon, this IEC Publication or any other IEC Publications.
8) Attention is drawn to the Normative references cited in this publication. Use of the referenced publications is indispensable for the correct application of this publication.
9) Attention is drawn to the possibility that some of the elements of this IEC Publication may be the subject of patent rights. IEC shall not be held responsible for identifying any or all such patent rights.

This redline version of the official IEC Standard allows the user to identify the changes made to the previous edition. A vertical bar appears in the margin wherever a change has been made. Additions are in green text, deletions are in strikethrough red text.

Documents
Document Sharing Hub

Full document details: IEC 60335-2-2 2019 RLV

International Standard IEC 60335-2-2 has been prepared by IEC technical committee 61: Safety of household and similar electrical appliances.

This seventh edition cancels and replaces the sixth edition published in 2009, Amendment 1:2012 and Amendment 2:2016. This edition constitutes a technical revision.

This edition includes the following significant technical changes with respect to the previous edition:

– some requirements for appliances for animal grooming have been modified (6.1, 25.7)
– the note in 7.101 has been deleted;
– converted some notes to normative text (7.102, 10.1, 11.3, 13.1, 15.2, 15.101, 19.101, 20.1, 20.2, 21.103, 21.105, 22.32, 25.23);
– clarification that the test of 19.7 is applicable to vacuum cleaners with a motorized brush or similar device;
– modified Annex R for alignment with 22.201 of Annex B;
– modified Annex S in accordance with IEC 60335-2-2:2009/ISH1:2016;
– requirements for mechanical strength of handles have been added (21.106).

The text of this International Standard is based on the following documents:

FDIS	Report on voting
61/5790/FDIS	61/5807/RVD

Full information on the voting for the approval of this International Standard can be found in the report on voting indicated in the above table.

This document has been drafted in accordance with the ISO/IEC Directives, Part 2.

A list of all parts of the IEC 60335 series, under the general title: *Household and similar electrical appliances – Safety*, can be found on the IEC website.

This Part 2 is to be used in conjunction with the latest edition of IEC 60335-1 and its amendments. It was established on the basis of the fifth edition (2010) of that standard.

NOTE 1 When “Part 1” is mentioned in this standard, it refers to IEC 60335-1.

This Part 2 supplements or modifies the corresponding clauses in IEC 60335-1, so as to convert that publication into the IEC standard: Safety requirements for vacuum cleaners and water-suction cleaning appliances.

When a particular subclause of Part 1 is not mentioned in this Part 2, that subclause applies as far as is reasonable. When this standard states "addition", "modification" or "replacement", the relevant text in Part 1 is to be adapted accordingly.

NOTE 2 The following numbering system is used:

– subclauses, tables and figures that are numbered starting from 101 are additional to those in Part 1;
– unless notes are in a new subclause or involve notes in Part 1, they are numbered starting from 101, including those in a replaced clause or subclause;
– additional annexes are lettered AA, BB, etc.

NOTE 3 The following print types are used:

– requirements: in roman type;
– *test specifications: in italic type*;
– notes: in small roman type.

Documents
Document Sharing Hub

Full document details: IEC 60335-2-2 2019 RLV

Words in **bold** in the text are defined in Clause 3. When a definition concerns an adjective, the adjective and the associated noun are also in bold.

The committee has decided that the contents of this document will remain unchanged until the stability date indicated on the IEC website under "http://webstore.iec.ch" in the data related to the specific document. At this date, the document will be

- reconfirmed,
- withdrawn,
- replaced by a revised edition, or
- amended.

NOTE 4 The attention of National Committees is drawn to the fact that equipment manufacturers and testing organizations may need a transitional period following publication of a new, amended or revised IEC publication in which to make products in accordance with the new requirements and to equip themselves for conducting new or revised tests.

It is the recommendation of the committee that the content of this publication be adopted for implementation nationally not earlier than 12 months or later than 36 months from the date of publication.

The following differences exist in the countries indicated below.

– 3.1.9: Normal operation is defined differently and any control operating before 20 s is defeated when determining Pi (USA).
– 6.1: Class 0 appliances are allowed (Canada, Japan, USA).
– 6.1: Household vacuum cleaners are required to be class II or class III (Denmark and Norway).
– 6.2: IPX4 is not required (USA).
– 7.1: The additional marking for appliance outlets for accessories is not required (USA).
– 7.1: Appliance and outlet ratings are to be marked in amps. (USA).
– 10.1: The power input of booster settings is taken into account (USA).
– 11.3: Surface temperatures are measured with thermocouples (USA).
– 11.5: Booster settings are activated every 2 min out of 8 min (USA).
– 11.7: The test is carried out with one-third of the cord unreeled until steady conditions are established (USA).
– 11.8: Surface temperature limits are different (USA).
– 15.2: The test is carried out differently (USA).
– 16.3: The test is carried out differently (USA).
– 21.106 The test is carried out differently (USA).

IMPORTANT – The 'colour inside' logo on the cover page of this publication indicates that it contains colours which are considered to be useful for the correct understanding of its contents. Users should therefore print this document using a colour printer.

Documents
Document Sharing Hub

Full document details: IEC 60335-2-2 2019 RLV

INTRODUCTION

It has been assumed in the drafting of this International Standard that the execution of its provisions is entrusted to appropriately qualified and experienced persons.

This standard recognizes the internationally accepted level of protection against hazards such as electrical, mechanical, thermal, fire and radiation of appliances when operated as in normal use taking into account the manufacturer's instructions. It also covers abnormal situations that can be expected in practice and takes into account the way in which electromagnetic phenomena can affect the safe operation of appliances.

This standard takes into account the requirements of IEC 60364 as far as possible so that there is compatibility with the wiring rules when the appliance is connected to the supply mains. However, national wiring rules may differ.

If an appliance within the scope of this standard also incorporates functions that are covered by another part 2 of IEC 60335, the relevant part 2 is applied to each function separately, as far as is reasonable. If applicable, the influence of one function on the other is taken into account.

When a part 2 standard does not include additional requirements to cover hazards dealt with in Part 1, Part 1 applies.

NOTE 1 This means that the technical committees responsible for the part 2 standards have determined that it is not necessary to specify particular requirements for the appliance in question over and above the general requirements.

This standard is a product family standard dealing with the safety of appliances and takes precedence over horizontal and generic standards covering the same subject.

NOTE 2 Horizontal and generic standards covering a hazard are not applicable since they have been taken into consideration when developing the general and particular requirements for the IEC 60335 series of standards. For example, in the case of temperature requirements for surfaces on many appliances, generic standards, such as ISO 13732-1 for hot surfaces, are not applicable in addition to Part 1 or part 2 standards.

An appliance that complies with the text of this standard will not necessarily be considered to comply with the safety principles of the standard if, when examined and tested, it is found to have other features that impair the level of safety covered by these requirements.

An appliance employing materials or having forms of construction differing from those detailed in the requirements of this standard may be examined and tested according to the intent of the requirements and, if found to be substantially equivalent, may be considered to comply with the standard.

Documents
Document Sharing Hub

Full document details: IEC 60335-2-2 2019 RLV

HOUSEHOLD AND SIMILAR ELECTRICAL APPLIANCES – SAFETY –

Part 2-2: Particular requirements for vacuum cleaners and water-suction cleaning appliances

1 Scope

This clause of Part 1 is replaced by the following.

This International Standard deals with the safety of electric vacuum cleaners and **water-suction cleaning appliances** for household and similar purposes, including vacuum cleaners for animal grooming, their **rated voltage** being not more than 250 V. It also applies to **centrally-sited vacuum cleaners** and **automatic** ~~**battery-powered**~~ **battery-operated cleaners**.

This standard also applies to **motorized cleaning heads** and current-carrying hoses associated with a particular vacuum cleaner.

Battery-operated appliances and other DC supplied appliances are within the scope of this standard. Dual supply appliances, either mains-supplied or battery-operated, are regarded as **battery-operated appliances** when operated in the battery mode.

Appliances not intended for normal household use, but which nevertheless may be a source of danger to the public, such as appliances intended to be used by laymen in shops and other premises for normal housekeeping purposes, are within the scope of this standard.

NOTE 101 Examples of such appliances are appliances intended to be used for normal housekeeping purposes in hotels, offices, schools, hospitals and similar premises.

As far as is practicable, this standard deals with the common hazards presented by appliances that are encountered by all persons in and around the home. However, in general, it does not take into account

– persons (including children) whose
  - physical, sensory or mental capabilities; or
  - lack of experience and knowledge

  prevents them from using the appliance safely without supervision or instruction;
– children playing with the appliance.

NOTE 102 Attention is drawn to the fact that

– for appliances intended to be used in vehicles or on board ships or aircraft, additional requirements ~~may~~ can be necessary;
– in many countries additional requirements are specified by the national health authorities, the national authorities responsible for the protection of labour, the national water supply authorities and similar authorities.

NOTE 103 This standard does not apply to

– appliances intended exclusively for industrial purposes;
– appliances intended to be used in locations where special conditions prevail, such as the presence of a corrosive or explosive atmosphere (dust, vapour or gas);
– wet and dry vacuum cleaners, including power brush, for commercial use (IEC 60335-2-69).

Documents
Document Sharing Hub
Full document details: IEC 60335-2-2 2019 RLV

2 Normative references

This clause of Part 1 is applicable except as follows.

Addition:

~~IEC 60312, *Vacuum cleaners for household use – Methods of measuring the performance*~~

IEC 60584-1, *Thermocouples – Part 1: EMF specifications and tolerances*

IEC TS 62885-1: 2018, *Surface cleaning appliances – Part 1: General requirements on test material and test equipment*

ISO 216, *Writing paper and certain classes of printed matter – Trimmed sizes – A and B series, and indication of machine direction*

ISO 6344-2, *Coated abrasives – Grain size analysis – Part 2: Determination of grain size distribution of macrogrits P12 to P220*

ISO 7010:2011, *Graphical symbols – Safety colours and safety signs – Registered safety signs*

ISO 14688-1, *Geotechnical investigation and testing – Identification and classification of soil – Part 1: Identification and description*

3 Terms and definitions

This clause of Part 1 is applicable except as follows.

3.1 Definitions relating to physical characteristics

3.1.4 *Addition:*

Note 101 to entry: For appliances incorporating a **booster setting**, the **rated power input** corresponds to the operation of the appliance without the **booster setting** being used.

3.1.9 *Replacement:*

normal operation
operation of the appliance under the following conditions:

The appliance is supplied at **rated voltage** and operated continuously with the air inlet adjusted to give a power input P_m after 20 s

Three minutes later, a final adjustment of the air inlet is made, if necessary.

P_m is calculated from the formula

$$P_m = 0{,}5\ (P_f + P_i)$$

where

P_f is the power input in watts, after 3 min of operation with the air inlet unobstructed. Any device that ensures a flow of air to cool the motor in the event of a blockage of the main air inlet is allowed to operate;

Documents
Document Sharing Hub
Full document details: IEC 60335-2-2 2019 RLV

P_i is the power input in watts, after a further 20 s of operation with the air inlet blocked. Any device that is adjustable without the aid of a **tool**, and which ensures a flow of air to cool the motor in the event of a blockage of a main air inlet, is rendered inoperative. If P_i has a rapid non-linear decrease or cannot be measured due to the appliance suction motor stopping before 20 s, the air inlet is gradually blocked to the extent that the motor stops after 20 $^{+5}_{-0}$ s. In this case, P_i is the maximum value of power input in the last two seconds before the motor shuts off.

If the appliance is marked with a **rated voltage range**, it is supplied at the mean value of the range if the difference between the limits of the range does not exceed 10 % of the mean value. If the difference exceeds 10 %, the supply voltage is the upper value of the range.

The measurements are made with the appliance fitted with a clean dust bag and filter, any water collection container being empty. If the appliance is intended to be used only with a hose, detachable nozzles and tubes are removed and the hose is laid out straight. If the appliance is provided with a hose as an accessory, it is operated without the hose.

Rotating brushes and similar devices are in operation but not in contact with any surface. **Motorized cleaning heads** are connected by means of the hose or tube and are in operation but not in contact with any surface.

Appliance outlets for other accessories are loaded with a resistive load in accordance with the marking.

Automatic ~~battery-powered~~ **battery-operated cleaners** are operated with a clean dust bag or filter on the carpet ~~defined in IEC 60312~~ meeting the construction specifications given in Table 1 in IEC TS 62885-1:2018. A frame of 1,5 m by 1,5 m is used on the carpet to limit the area of action. The air inlet is unobstructed.

3.5 Definitions relating to types of appliances

3.5.101
ash vacuum cleaner
vacuum cleaner intended to vacuum cold ash from fireplaces, chimneys, ovens, ash-trays and similar places of ash accumulation

~~3.105~~ 3.5.102
automatic ~~battery-powered~~ **battery-operated cleaner**
~~automatic~~ vacuum cleaner that operates without human control only within a defined perimeter, within a pre-programmed area or in an area self-controlled by the appliance

Note 1 to entry: The cleaner consists of the mobile part and may have a **docking station**.

3.5.103
centrally-sited vacuum cleaner
vacuum cleaner that is connected to a ducting system installed in the building

Note 1 to entry: During use, the nozzle and its associated hose are connected to one of the suction inlets of the ducting system.

~~3.101~~ 3.5.104
water-suction cleaning appliance
appliance for aspirating an aqueous solution that may contain foaming detergent

3.6 Definitions relating to parts of an appliance

~~3.106~~ 3.6.101
docking station
unit that may provide

Documents
Document Sharing Hub
Full document details: IEC 60335-2-2 2019 RLV

– manual or automatic battery charging facilities,
– dust removal,
– data processing facility, and
– suction for the mobile part

Note 1 to entry: A **docking station** is also known as a base unit.

~~3.104~~ **3.6.102**
motorized cleaning head
accessory containing a motor that is supplied from the vacuum cleaner and which is attached to the end of a hose or tube

3.8 Definitions relating to miscellaneous matters

~~3.102~~ **3.8.101**
booster setting
position of a control resulting in a temporary higher power input that is automatically reduced to the power input value when the setting is not used

4 General requirement

This clause of Part 1 is applicable.

5 General conditions for the tests

This clause of Part 1 is applicable except as follows.

5.2 *Addition:*

A new hose is used for each of the tests of 21.101 to 21.105. The test of 19.105 may be carried out on a separate appliance.

5.101 *Current-carrying hoses operating at* ***safety extra-low voltage*** *are not subjected to the tests of 21.101 to 21.105.*

6 Classification

This clause of Part 1 is applicable except as follows.

6.1 *Modification:*

Vacuum cleaners and **water-suction cleaning appliances** shall be **class I**, **class II** or **class III**.

Vacuum cleaners for animal grooming shall be **class II** or **class III**.

~~Vacuum cleaners may be **class 0** provided that their **rated voltage** does not exceed 150 V.~~

Stationary parts of **automatic** ~~**battery-powered**~~ **battery-operated cleaners** may be **class 0** if the **rated voltage** does not exceed 150 V.

Documents
Document Sharing Hub
Full document details: IEC 60335-2-2 2019 RLV

6.2 *Addition:*

Vacuum cleaners for animal grooming and **water-suction cleaning appliances** shall be at least IPX4.

7 Marking and instructions

This clause of Part 1 is applicable except as follows.

7.1 Addition:

The appliance shall be marked with the sum of its **rated power input** and the maximum load of the appliance outlet in watts (if applicable). **Ash vacuum cleaners** shall be marked with symbol ISO 7000-0434A (2004-01), symbol ISO 7000-0790 (2004-01) and Warning sign ISO 7010 W021(2011-06).

7.6 *Addition:*

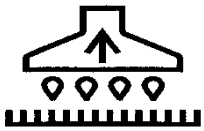	[symbol IEC 60417-5935 (~~2002-10~~2012-09)]	**motorized cleaning head** for water suction cleaning
	[Warning sign ISO 7010 W021(2011-06)]	warning; risk of fire/flammable materials

7.12 *Addition:*

The instructions for appliances having a current-carrying hose operating at other than **safety extra-low voltage** shall include the substance of the following:

CAUTION: This hose contains electrical connections:

– do not use to suck up water (for vacuum cleaners only);
– do not immerse in water for cleaning;
– the hose should be checked regularly and must not be used if damaged.

The instructions for vacuum cleaners incorporating rotating brushes or similar devices, and **water-suction cleaning appliances**, shall state that the plug must be removed from the socket-outlet before cleaning or maintaining the appliance.

If symbol IEC 60417-5935 (~~2002-10~~2012-09) is used, its meaning shall be explained.

7.12.1 *Addition:*

The instructions for **ash vacuum cleaners** shall include the substance of the following:

This appliance is intended to pick up cold ash from fireplaces, chimneys, ovens, ash-trays, and similar places of ash accumulation.

Documents
Document Sharing Hub

Full document details: IEC 60335-2-2 2019 RLV

WARNING: Risk of fire

– do not pick up hot, glowing or burning ash. Pick up cold ash only;
– the dust container must be emptied and cleaned before and after each use;
– do not use paper dust bags or bags made from similar flammable materials;
– do not use any other vacuum cleaner to vacuum ash;
– do not rest the ash vacuum cleaner on flammable or polymeric surfaces, including carpeting and vinyl tile.

7.14 *Addition:*

The height of symbol IEC 60417-5935 (~~2002-10~~2012-09), symbol ISO 7000-0434A (2004-01), symbol ISO 7000-0790 (2004-01) and Warning sign ISO 7010 W021 (2011-06) shall be at least
15 mm.

Compliance is checked by measurement.

7.15 Addition:

Symbol ISO 7000-0434A (2004-01) shall be located next to symbol ISO 7000-0790 (2004-01).

7.101 **Motorized cleaning heads** shall be marked with

– **rated voltage** or **rated voltage range** in volts;
– **rated power input** in watts;
– name, trade mark or identification mark of the manufacturer or responsible vendor;
– model or type reference.

Motorized cleaning heads for **water-suction cleaning appliances**~~, except those of **class III construction** having a **working voltage** up to 24 V,~~ shall be marked with symbol IEC 60417-5935 (~~2002-10~~2012-09).

~~NOTE This symbol is an information sign and, except for the colours, the rules of ISO 3864-1 apply.~~

Compliance is checked by inspection.

7.102 Appliance outlets for accessories shall be marked with the maximum load in watts.

~~NOTE~~ This marking may be on the appliance close to the appliance outlet.

Compliance is checked by inspection.

8 Protection against access to live parts

This clause of Part 1 is applicable except as follows.

8.1.1 *Addition:*

If the instructions state that a part is to be removed when replacing a lamp or a drive belt, and a **tool** is required for its removal, the part is not considered to be a **detachable part** provided that

– an instruction to disconnect the appliance from the supply before opening is marked on the cover or is visible during its removal; and

AVA Documents Document Sharing Hub

– after removal of the cover, access to **live parts** is prevented by at least **basic insulation**.

9 Starting of motor-operated appliances

This clause of Part 1 is not applicable.

10 Power input and current

This clause of Part 1 is applicable except as follows.

10.1 *Addition:*

*The power input of **motorized cleaning heads** is measured separately.*

~~NOTE 101~~ *Appliance outlets are not loaded when measuring the **rated power input**.*

Booster settings are not used during these measurements.

11 Heating

This clause of Part 1 is applicable except as follows.

11.3 *Addition:*

~~NOTE 101~~ *When measuring the power input to ensure that the appliance has been correctly reassembled, the power input P_i with the air-inlet blocked is measured.*

*Where the external **accessible surfaces** are suitably flat and access permits, then the test probe of Figure 105 is used to measure the temperature rises of external **accessible surfaces** specified in Table 101. The probe is applied with a force of 4 N ± 1 N to the surface in such a way that the best possible contact between the probe and the surface is ensured. The measurement is performed after a contact period of 30 s.*

The probe may be held in place using a laboratory stand clamp or similar device. Any measuring instrument giving the same results as the probe may be used.

11.5 *Addition:*

***Booster settings** are activated as often as allowed by the construction.*

***Docking stations** of **automatic** ~~**battery-powered**~~ **battery-operated** **cleaners** are operated at 0,94 or 1,06 times **rated voltage**, whichever is the most unfavourable.*

*If a suction mode is incorporated in **docking stations** of **automatic** ~~**battery-powered**~~ **battery-operated** **cleaners**, the test conditions of 3.1.9 are applied.*

11.7 *Addition:*

Appliances are operated until steady conditions are established.

Appliances incorporating an automatic cord reel are operated with one-third of the total length of the cord unreeled for 30 min, after which the cord is completely unreeled.

Documents
Document Sharing Hub
Full document details: IEC 60335-2-2 2019 RLV

11.8 *Addition:*

During the test, the temperature rises are monitored continuously and shall not exceed the values shown in Table 3 and Table 101.

Table 101 – Maximum temperature rises for specified accessible external surfaces under normal operating conditions

Surface	*Temperature rise of accessible external surfaces*[f] *K*		
	Surfaces of portable appliances situated on the floor [d]	*Surfaces of hand held appliances and other appliances* [e]	*Surfaces of centrally sited vacuum cleaners*
Bare metal	*38*	*42*	*48*
Coated metal [a]	*42*	*49*	*59*
Glass and ceramic	*51*	*56*	*65*
Plastic and plastic coating > 0,4 mm [b, c]	*58*	*62*	*74*

[a] *Metal is considered coated when a coating having a minimum thickness of 90 µm made by enamel or non-substantially plastic coating is used.*

[b] *The temperature rise limit of plastic also applies for plastic material having a metal finish of thickness less than 0,1 mm.*

[c] *When the thickness of the plastic coating does not exceed 0,4 mm, the temperature rise limits of the coated metal or of glass and ceramic material apply.*

[d] *Within 25 mm from air outlets, the above values can be increased by 10 K.*

[e] *Within 25 mm from air outlets, the above values can be increased by 5 K.*

[f] *Surfaces that are inaccessible to a 75 mm diameter probe having a hemispherical end, applied with a force not exceeding 1 N, are not measured.*

12 Void

13 Leakage current and electric strength at operating temperature

This clause of Part 1 is applicable except as follows.

13.1 *Addition:*

~~NOTE 101~~ ***Booster settings*** *are not used.*

14 Transient overvoltages

This clause of Part 1 is applicable.

15 Moisture resistance

This clause of Part 1 is applicable except as follows.

15.2 *Replacement:*

Documents
Document Sharing Hub

Full document details: IEC 60335-2-2 2019 RLV

Appliances having a liquid container shall be constructed so that spillage of liquid due to overfilling, and due to overturning of appliances liable to be overturned in normal use, does not affect their electrical insulation.

Compliance is checked by the following test.

The liquid container is filled with water to half the level indicated in the instructions. The appliance is placed on a support inclined at an angle of 10° to the horizontal. A force of 180 N is applied to the top of the appliance in the most unfavourable horizontal direction. If the appliance overturns, it is considered to be liable to be overturned in normal use.

Appliances with ***type X attachment****, except those having a specially prepared cord, are fitted with the lightest permissible type of flexible cord of the smallest cross-sectional area specified in Table 13.*

Appliances incorporating an appliance inlet are tested with or without an appropriate connector in position, whichever is more unfavourable.

Liquid containers that are filled by hand are completely filled with water containing approximately 1 % NaCl, and a further quantity, equal to 15 % of the capacity of the container or 0,25 l, whichever is the greater, is poured in steadily over a period of 1 min.

Containers of ***hand-held appliances*** *and other appliances liable to be overturned in normal use are completely filled, the cover being closed. The appliance is then overturned and left in that position for 5 min, unless it returns automatically to its normal position of use.*

Nozzles and ***motorized cleaning heads*** *of* ***water-suction cleaning appliances*** *are placed in a container, the base of which is level with the surface supporting the appliance. The container is filled with a detergent solution to a level of 5 mm above its base, this level being maintained throughout the test. The solution consists of 20 g of NaCl and 1 ml of a solution of 28 % by mass of dodecyl sodium sulphate in each 8 l of water. The solution is to be stored in a cool atmosphere and used within seven days of its preparation.*

The appliance is operated until its liquid container is completely full and for a further 5 min.

~~NOTE 101 The solution is to be stored in a cool atmosphere and used within seven days of its preparation.~~

NOTE ~~102~~101 The chemical designation of dodecyl sodium sulphate is $C_{12}H_{25}NaSO_4$.

After each of these tests, the appliance shall withstand the electric strength test of 16.3.

Inspection shall show that there is no trace of liquid on insulation that could result in a reduction of ***clearances*** *or* ***creepage distances*** *below the values specified in Clause 29.*

15.101 Motorized cleaning heads of **water-suction cleaning appliances** shall be resistant to liquids that may come into contact with them.

Compliance is checked by the following tests.

The ***motorized cleaning head*** *is subjected to an impact test as described in IEC 60068-2-75, the value of the impact being 2 J. The* ***motorized cleaning head*** *is rigidly supported and three blows are applied to every point of the enclosure that is likely to be weak.*

It is then subjected to the test Free fall – Procedure 1 of IEC 60068-2-~~32~~31. It is dropped 4 000 times from a height of 100 mm onto a steel plate having a thickness of not less than 15 mm. It is dropped

– *1 000 times on its right side,*

Documents
Document Sharing Hub
Full document details: IEC 60335-2-2 2019 RLV

– *1 000 times on its left side,*
– *1 000 times on its front face,*
– *1 000 times on its cleaning surface.*

*The **motorized cleaning head** is then subjected to the test described in 14.2.7 of IEC 60529, the water containing approximately 1 % NaCl.*

*The **motorized cleaning head** shall then withstand the electric strength test of 16.3, the voltage being applied between the **live parts** and the solution. Inspection shall show that there is no trace of saline solution on insulation that could result in a reduction of **clearances** or **creepage distances** below the values specified in Clause 29.*

~~NOTE~~ *The test is not carried out on **motorized cleaning heads** of **class III construction** having a **working voltage** up to 24 V.*

16 Leakage current and electric strength

This clause of Part 1 is applicable except as follows.

16.3 *Addition:*

Current-carrying hoses, except for their electrical connections, are immersed for 1 h in water containing approximately 1 % NaCl, at a temperature of 20 °C ± 5 °C. While the hose is still immersed, a voltage of 2 000 V is applied for 5 min between each conductor and all the other conductors connected together. A voltage of 3 000 V is then applied for 1 min between all the conductors and the saline solution.

17 Overload protection of transformers and associated circuits

This clause of Part 1 is applicable.

18 Endurance

This clause of Part 1 is not applicable.

19 Abnormal operation

This clause of Part 1 is applicable except as follows.

19.1 *Addition:*

*The test of 19.7 is only carried out on **motorized cleaning heads**, vacuum cleaners with a motorized brush or similar device, and separate fan motors of **centrally-sited vacuum cleaners**.*

***Water-suction cleaning appliances** having a valve are also subjected to the test of 19.101.*

*Appliances incorporating a **booster setting** that is not deactivated electronically are also subjected to the test of 19.102.*

***Centrally-sited vacuum cleaners** are also subjected to the tests of 19.103, and 19.104 if applicable.*

Documents
Document Sharing Hub
Full document details: IEC 60335-2-2 2019 RLV

Vacuum cleaners that stop automatically when there is a blockage are also subject to the test of 19.4.

19.4 *Addition:*

The appliance is tested under the conditions specified in Clause 11 with the inlet blocked. Any control that is allowed to disconnect the suction motor during the P_i determination of 3.1.9 is short-circuited.

19.7 *Addition:*

Motorized cleaning heads *and vacuum cleaners with a motorized brush or similar device are tested with the rotating brush or similar device locked for 30 s.*

Separate fan motors of ***centrally-sited vacuum cleaners*** *are operated until steady conditions are reached.*

19.9 *Replacement:*

Docking stations *of* ***automatic*** ~~***battery-powered***~~ ***battery-operated*** ***cleaners*** *incorporating a suction mode are tested at* ***rated voltage*** *with the air inlet fully blocked until steady conditions are established.*

The temperatures of the windings shall not exceed the values specified in Table 8.

19.10 *Replacement:*

Appliances incorporating series motors are supplied at 1,3 times ***rated voltage*** *and operated for 30 s with the air inlet blocked, rotating brushes and similar devices being removed.*

After this test, the safety of the appliance shall not have been impaired, in particular windings and connections shall not have worked loose.

19.101 ***Water-suction cleaning appliances****, the liquid container of which incorporates a valve or other overfill prevention device, are supplied at* ***rated voltage****. The appliance is operated with the nozzle placed in a trough containing water and with the valve or overfill prevention-device held open or otherwise rendered inoperative. The test is terminated 30 s after water starts to flow out of the appliance.*

~~NOTE~~ *If the appliance incorporates more than one overfill prevention device, these are rendered inoperative in turn.*

19.102 *The deactivating means of the* ***booster setting*** *is rendered inoperative and the appliance is operated under the conditions specified in Clause 11 using the* ***booster setting****.*

19.103 ***Centrally-sited vacuum cleaners*** *are supplied at* ***rated voltage*** *and operated with the inlet for the suction hose open and then closed.*

The temperatures of the windings shall not exceed the values specified in 19.9.

19.104 ***Centrally-sited vacuum cleaners*** *with separate ventilation for the motor are supplied at* ***rated voltage*** *and operated with the airflow through the motor blocked.*

19.105 **Ash vacuum cleaners** shall not cause a risk of fire or electric shock when operated under the following test conditions:

AVA Documents
Document Sharing Hub

Full document details: IEC 60335-2-2 2019 RLV

*The **ash vacuum cleaner** is prepared for operation according the instruction for use, but switched off.*

*The empty container of the **ash vacuum cleaner** is filled up to two-thirds of its useable volume with paper balls. Each paper ball is made out of crumpled sheets of A4 copy paper having a weight in the range 70 g/m^2 to 120 g/m^2 in accordance with ISO 216. Each paper sheet shall be crumpled to a size so that it fits into a cube having sides of 10 cm.*

The paper balls are ignited with a burning paper strip positioned in the centre of the paper balls top layer. After 1 min the container is closed and kept in this position until steady conditions are reached.

During the tests, the appliance shall not emit flames or molten material.

*Afterwards, this test is repeated with a new sample but with all suction motors switched on immediately after the closing of the container. If the **ash vacuum cleaner** has a control for air flow adjustment, the test shall be done with minimum and maximum air flow settings.*

After the test the appliance shall comply with 19.13.

20 Stability and mechanical hazards

This clause of Part 1 is applicable except as follows.

20.1 *Addition:*

~~NOTE 101~~ ***Motorized cleaning heads** are not subjected to this test.*

20.2 *Addition:*

~~NOTE 101~~ The requirement regarding moving parts does not apply to rotating brushes and similar devices. It does not apply to parts that become accessible when changing accessories and only move when the brush or similar device is in operation.

21 Mechanical strength

This clause of Part 1 is applicable except as follows.

21.101 Current-carrying hoses shall be resistant to crushing.

Compliance is checked by the following test.

The hose is placed between two parallel steel plates each having a length of 100 mm, a width of 50 mm and the edges of the longer sides rounded with a radius of 1 mm. The axis of the hose is positioned at right angles to the longer sides of the plates. The plates are placed at a distance of approximately 350 mm from one end of the hose.

The steel plates are pressed together at a rate of 50 mm/min ± 5 mm/min until the applied force is 1,5 kN. The force is then released and the electric strength test of 16.3 is carried out between the conductors connected together and the saline solution.

21.102 Current-carrying hoses shall be resistant to abrasion.

Compliance is checked by the following test.

Documents
Document Sharing Hub

Full document details: IEC 60335-2-2 2019 RLV

One end of the hose is attached to the connecting rod of the crank mechanism shown in Figure 101. The crank rotates at 30 r/min resulting in the end of the hose moving horizontally backwards and forwards over a distance of 300 mm.

The hose is supported by a rotating smooth roller over which a belt of abrasive cloth moves at a speed of 0,1 m/min. The abrasive is corundum grit size P100, as specified in ISO 6344-2. A mass of 1 kg is suspended from the other end of the hose, which is guided to avoid rotation. In the lowest position, the mass has a maximum distance of 600 mm from the centre of the roller.

The test is carried out for 100 revolutions of the crank.

After the test, ***basic insulation*** *shall not be exposed, and the electric strength test of 16.3 is carried out between the conductors connected together and the saline solution.*

21.103 Current-carrying hoses shall be resistant to flexing.

Compliance is checked by the following test.

The end of the hose intended to be connected to the ***motorized cleaning head*** *is attached to the pivoting arm of the test equipment shown in Figure 102. The distance between the pivot axis of the arm and the point where the hose enters the rigid part is 300 mm ± 5 mm. The arm can be raised from the horizontal position by an angle of 40° ± 1°. A mass of 5 kg is suspended from the other end of the hose or from a convenient point along the hose so that when the arm is in the horizontal position the mass is supported and there is no tension on the hose.*

~~NOTE 1 It may be necessary to reposition the mass during the test.~~

If necessary the mass may be repositioned during the test.

The mass slides against an inclined plate so that the maximum deflection of the hose is 3°. The arm is raised and lowered by means of a crank that rotates at a speed of 10 r/min ± 1 r/min.

The test is carried out for 2 500 revolutions of the crank after which the fixed end of the hose is turned through 90° and the test continued for a further 2 500 revolutions. The test is repeated in each of the other two 90° positions. If the hose ruptures before 10 000 revolutions of the crank, the flexing is terminated.

~~NOTE 2 If the hose ruptures before 10 000 revolutions of the crank, the flexing is terminated.~~

After the test, the hose shall withstand the electric strength test of 16.3.

21.104 Current-carrying hoses shall be resistant to torsion.

Compliance is checked by the following test.

One end of the hose is held in a horizontal position with the remainder of the hose freely suspended. The free end is rotated in cycles, each cycle consisting of five turns in one direction and five turns in the opposite direction, at a rate of 10 turns per minute.

The test is carried out for 2 000 cycles.

After the test, the hose shall withstand the electric strength test of 16.3 and shall not be damaged to such an extent that compliance with this standard is impaired.

Documents
Document Sharing Hub
Full document details: IEC 60335-2-2 2019 RLV

21.105 Current-carrying hoses shall be resistant to cold conditions.

Compliance is checked by the following test.

A 600 mm length of hose is bent as shown in Figure 103 and the ends are tied together over a length of 25 mm. The hose is then placed for 2 h in a cabinet having a temperature of –15 °C ± 2 °C. Immediately after, the hose is removed from the cabinet it is flexed three times, as shown in Figure 104, at a rate of one flexing per second.

The test is carried out three times.

There shall be no cracks or breaks in the hose, discolouration being neglected, and it shall withstand the electric strength test of 16.3.

~~NOTE Any discoloration is neglected.~~

21.106 A handle intended for carrying an appliance shall be constructed to withstand the weight of the appliance without damage. This requirement is not applicable to **hand-held vacuum cleaners** or **automatic battery-operated cleaners**.

Compliance is checked by the following test.

The load, consisting of the weight of the appliance with its dust receptacle filled with dry medium grade sand according to ISO 14688-1 shall be uniformly applied over a 75 mm width at the centre of the handle without clamping. If the receptacle is marked with a maximum dust level then the sand is added to this level. The load shall be started at zero and gradually increased so that the test value is reached in 5 s to 10 s and shall be maintained for 1 min.

When more than one handle is furnished on an appliance, and the appliance is unable to be carried by one handle, the force shall be distributed between the handles. The distribution of force shall be determined by measuring the percentage of the appliance weight sustained by each handle with the appliance in the normal carrying position.

When an appliance is furnished with more than one handle and can be carried by only one handle, each handle shall sustain the total force. A ***water-suction cleaning appliance*** *that is completely supported in the hand or by the body during use shall be filled to maximum normal capacity with water when determining the weight of the appliance and during the test. For an appliance with separate tanks for clean solution and recovery, only the largest tank shall be filled to maximum.*

After the test, there shall be no damage to the handle, its securing means, or that portion of the appliance to which the handle is attached. Damage to the finish, small dents and small chips are ignored.

22 Construction

This clause of Part 1 is applicable except as follows.

22.32 *Addition:*

Vacuum cleaners shall be constructed so that the internal parts of the motors and electrical connections are not subjected to deposition of dust due to the passage of air.

~~NOTE 101~~ This requirement is met if the air passes through the dust bag before it passes through the motor.

Documents
Document Sharing Hub

Full document details: IEC 60335-2-2 2019 RLV

~~NOTE 102~~ For **water-suction cleaning appliances**, compliance with the requirement concerning protection against deposition of pollution has been adequately checked by the test of 15.2.

22.101 Motorized cleaning heads for use with appliances that have a water-suction cleaning mode, except those of **class III construction** having a working voltage up to 24 V, shall be **motorized cleaning heads** for water-suction cleaning appliances.

*Compliance is checked by inspection of the marking and the tests for **motorized cleaning heads** for **water-suction cleaning appliances**.*

22.102 Ash vacuum cleaners shall be equipped with a finely woven metal pre-filter or a pre-filter manufactured using flame retardant material with a GWFI as specified in 30.2.101. All parts including accessories in direct contact with ash located before the pre filter shall be made out of metal or made of a non-metallic material complying with 30.2.102. Metal containers shall have a minimum wall thickness of 0,35 mm.

Compliance is checked by inspection, by measurement, by the tests of 30.2.101 and 30.2.102 if applicable and by the following test.

Test probe C from IEC 61032 shall not penetrate the finely woven metal pre-filter when applied with a force of 3 N.

22.103 The length of hoses supplied with **ash vacuum cleaners** shall be limited.

Compliance is checked by measuring the length of the hose between the part normally held in the hand and where it enters the ash container.

The fully extended length shall not exceed 2 m.

23 Internal wiring

This clause of Part 1 is applicable.

24 Components

This clause of Part 1 is applicable except as follows.

24.1.3 *Addition:*

Switches incorporated in vacuum cleaners, other than those for household use only, are tested for 50 000 cycles of operation.

25 Supply connection and external flexible cords

This clause of Part 1 is applicable except as follows.

25.1 *Addition:*

Vacuum cleaners for animal grooming and **water-suction cleaning appliances** shall not incorporate an appliance inlet.

Documents
Document Sharing Hub
Full document details: IEC 60335-2-2 2019 RLV

25.7 *Modification:*

Supply cords shall be not lighter than the following:

– for **hand-held appliances** having a mass not exceeding 1,5 kg when fitted with the heaviest accessory, but excluding the **supply cord**;
  - if rubber insulated, ordinary tough rubber sheathed flexible cord (code designation 60245 IEC 53);
  - if polyvinyl chloride insulated, light polyvinyl chloride sheathed flexible cord (code designation 60227 IEC 52).
– for appliances for animal grooming;
  - ordinary polychloroprene sheathed flexible cord (code designation 60245 IEC 57);
  - if polyvinyl chloride insulated, flat twin flexible cord (code designation 60227 IEC 42);
  - for appliances having a power cord greater than 3 m in length, polyvinyl chloride insulated, ordinary polyvinyl chloride sheathed flexible cord (code designation 60227 IEC 53).
– for other appliances;
  - if rubber insulated, ordinary tough rubber sheathed flexible cord (code designation 60245 IEC 53);
  - if polyvinyl chloride insulated, ordinary polyvinyl chloride sheathed flexible cord (code designation 60227 IEC 53).

25.23 *Addition:*

Live conductors in a flexible hose shall have an insulation and sheath thickness at least equivalent to that specified for a 60227 IEC 52 cord of 2 × 0,75 mm^2. The conductors used may consist of copper-plated steel wires.

~~NOTE 101 The conductors used may consist of copper-plated steel wires.~~

26 Terminals for external conductors

This clause of Part 1 is applicable.

27 Provision for earthing

This clause of Part 1 is applicable.

28 Screws and connections

This clause of Part 1 is applicable.

29 Clearances, creepage distances and solid insulation

This clause of Part 1 is applicable.

30 Resistance to heat and fire

This clause of Part 1 is applicable except as follows.

30.2 *Addition:*

Documents
Document Sharing Hub

Full document details: IEC 60335-2-2 2019 RLV

*For **centrally-sited vacuum cleaners**, 30.2.3 is applicable. For other appliances, 30.2.2 is applicable.*

30.2.101 *The container and filters of **ash vacuum cleaners** shall have a glow-wire flammability index (GWFI) of at least 850 °C according to IEC 60695-2-12, the test samples used for the classification shall be not thicker than the relevant part of the **ash vacuum cleaner**.*

*As an alternative, the container and filters of **ash vacuum cleaners** shall have a glow-wire ignition temperature (GWIT) of at least 875 °C according to IEC 60695-2-13, the test samples used for the classification shall be not thicker than the relevant part of the **ash vacuum cleaner**.*

*As an alternative the container and filters of **ash vacuum cleaners** are subjected to the glow wire test of IEC 60695-2-11 with a test severity of 850 °C. The value of $t_e - t_i$ shall not exceed 2 s.*

30.2.102 *All nozzles, deflectors and connectors located upstream of the pre-filter made out of non-metallic material are subjected to the needle flame test in accordance of Annex E. The needle flame test is not applicable to parts that comprise material classified as V-0 or V-1 according to IEC 60695-11-10 provided that the test sample used for the classification was no thicker than the relevant part of the **ash vacuum cleaner**.*

31 Resistance to rusting

This clause of Part 1 is applicable.

32 Radiation, toxicity and similar hazards

This clause of Part 1 is applicable.

Documents
Document Sharing Hub

Full document details: IEC 60335-2-2 2019 RLV

Dimensions in millimetres

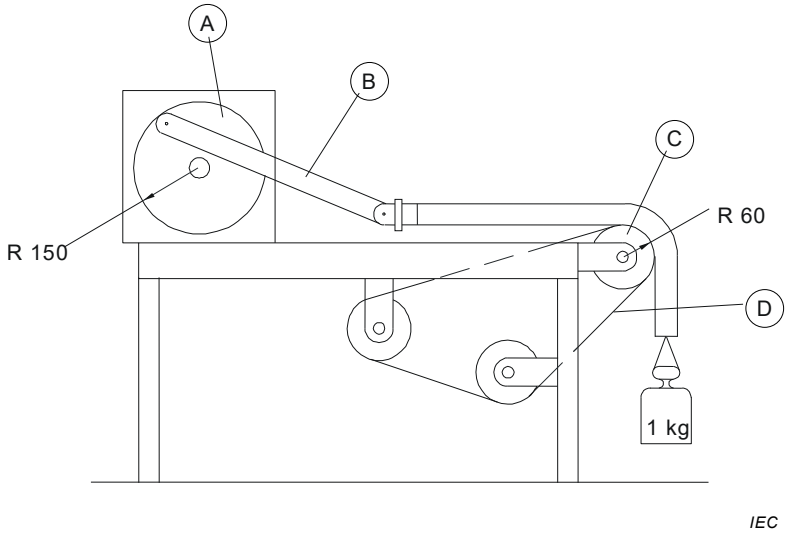

Key

A crank mechanism

B connecting rod

C roller, diameter 120 mm

D abrasive cloth belt

Figure 101 – Apparatus for testing the abrasion resistance of current-carrying hoses

Documents
Document Sharing Hub
Full document details: IEC 60335-2-2 2019 RLV

Dimensions in millimetres

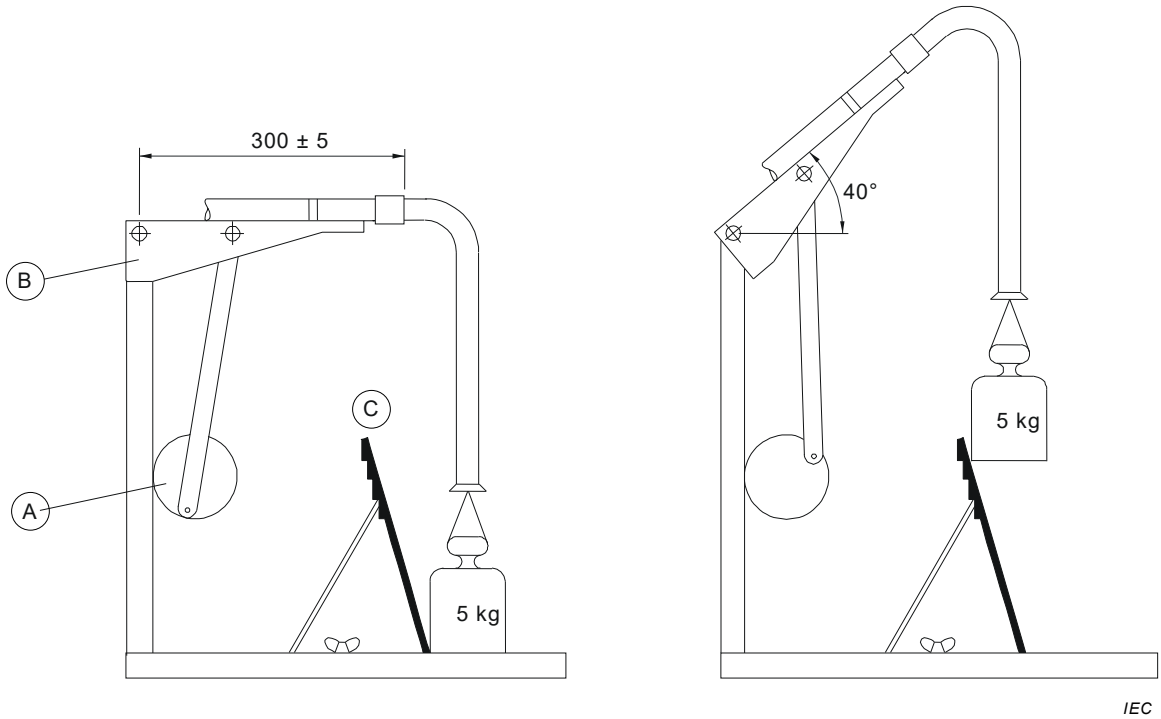

Key

A crank mechanism

B arm

C inclined plane

Figure 102 – Apparatus for testing the resistance to flexing of current-carrying hoses

Dimensions in millimetres

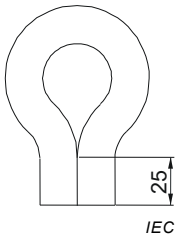

Figure 103 – Configuration of the hose for the freezing treatment

Documents
Document Sharing Hub
Full document details: IEC 60335-2-2 2019 RLV

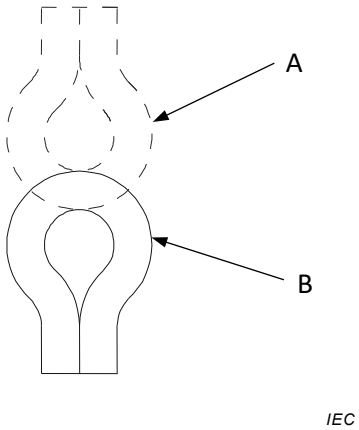

Key

A intermediate position

B Position of the hose at start and finish of each flexing

Figure 104 – Flexing positions for the hose after removal from the freezing cabinet

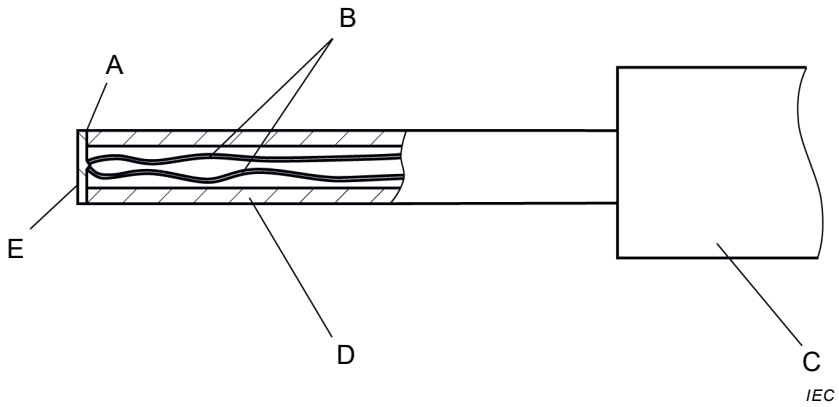

Key

A adhesive

B thermocouple wires 0,3 mm diameter to IEC 60584-1 Type K (chrome alumel)

C handle arrangement permitting a contact force of 4 N ± 1 N

D polycarbonate tube: inside diameter 3 mm, outside diameter 5 mm

E tinned copper disc: 5 mm diameter, 0,5 mm thick with a flat contact face

Figure 105 – Probe for measuring surface temperatures

Documents
Document Sharing Hub
Full document details: IEC 60335-2-2 2019 RLV

Annexes

The annexes of Part 1 are applicable except as follows.

Documents
Document Sharing Hub

Full document details: IEC 60335-2-2 2019 RLV

Annex B
(normative)

Appliances powered by rechargeable batteries that are recharged in the appliance

This annex of Part 1 is applicable except as follows.

NOTE Additional subclauses in this annex are numbered starting with 201.

Addition:

6 Classification

6.1 *Addition:*

Mobile parts of **automatic** ~~**battery-powered**~~ **battery-operated cleaners** shall be **class II** or **class III**.

7 Marking and instructions

7.1 *Addition:*

The mobile part of an **automatic** ~~**battery-powered**~~ **battery-operated cleaner** shall be marked with the

– name, trademark or identification mark of the manufacturer or responsible vendor;
– the model or type reference of the **docking station** with which the mobile part is intended to be used.

7.12 *Addition:*

Automatic battery-operated cleaners shall also be provided with cautionary instructions for room preparation and constant care.

11 Heating

11.7 *Addition:*

For mobile parts of ***automatic*** ~~***battery-powered***~~ ***battery-operated cleaners****, the test ends when the cleaning operation is stopped due to the discharging of the battery.*

19 Abnormal operation

19.1 *Addition:*

Mobile parts of ***automatic*** ~~***battery-powered***~~ ***battery-operated cleaners*** *are subjected to the test of 19.7 while they are being supplied by their battery.*

19.7 *Addition:*

On mobile parts of ***automatic*** ~~***battery-powered***~~ ***battery-operated****, the rotor is locked.*

AVA Documents
Document Sharing Hub

Full document details: IEC 60335-2-2 2019 RLV

21 Mechanical strength

21.201 Mobile parts of **automatic** ~~battery-powered~~ **battery-operated cleaners** shall have sufficient mechanical strength.

Compliance is checked by the following test.

An evenly distributed load of 60 kg is placed on top of the mobile part for 60 s. During this test, no short circuit shall occur. After the test, there shall be no visible damage that could impair compliance with this standard.

22 Construction

Addition:

22.40 *Addition:*

Mobile parts of **automatic** ~~battery-powered~~ **battery-operated cleaners** shall be fitted with a switch to turn the appliance off.

Compliance is checked by inspection.

If compliance relies on the operation of an electronic circuit, the electromagnetic phenomena tests of Subclause 19.11.4.1 and 19.11.4.2 have to be applied. During the tests, the motor which moves the mobile part shall not start.

22.201 Mobile parts of **automatic** ~~battery-powered~~ **battery-operated cleaners** shall be equipped with

– a device to stop movement within 1 s of accessible hazardous moving parts when they lose contact with the surface being cleaned; and
– a device to protect the appliance from dropping off the cleaning surface (e.g. stairways, etc.). When the mobile part senses that it has reached a critical edge, it shall
  - stop; or
  - reverse and move away from the edge of the cleaning surface and then continue to operate normally.

Compliance is checked by inspection and test.

NOTE The test can be carried out on a testing bed with rollers.

*If compliance relies on the operation of an **electronic circuit**, the test is repeated under the following conditions applied separately:*

– *the fault conditions in a) to g) of 19.11.2 applied one at a time to the **electronic circuit**;*
– *the electromagnetic phenomena test of 19.11.4.1 and 19.11.4.2 applied to the appliance.*

*If the **electronic circuit** is programmable, the software shall contain measures to control the fault/error conditions specified in Table R.1 and is evaluated in accordance with the relevant requirements of Annex R.*

22.202 When operating on a sloping surface, the speed of the mobile part shall not be excessive.

Compliance is checked by the following test.

Documents
Document Sharing Hub
Full document details: IEC 60335-2-2 2019 RLV

The speed of the mobile part is measured during the test of Clause 11.

The mobile part is then directed to move down a glass surface inclined at 10° to the horizontal and its speed is again measured. The measured speed shall not exceed the speed initially measured by more than 10 %.

Addition:

24 Components

24.201 Thermal cut-outs and **protective electronic circuits** incorporated in **automatic** ~~**battery-powered**~~ **battery-operated cleaners** for compliance with 19.7 shall be non-self-resetting.

Compliance is checked by inspection.

30 Resistance to heat and fire

30.2 *Addition:*

For ***automatic*** ~~***battery-powered***~~ ***battery-operated cleaners****, 30.2.3 is applicable.*

Documents
Document Sharing Hub

Full document details: IEC 60335-2-2 2019 RLV

Annex C
(normative)

Ageing test on motors

Modification:

The value of *p* in Table C.1 is 2 000.

Documents
Document Sharing Hub

Full document details: IEC 60335-2-2 2019 RLV

Annex R
(normative)

Software evaluation

R.2.2.5 *Modification*:

For **programmable electronic circuits** with functions requiring software incorporating measures to control the fault/error conditions specified in Table R.1, detection of a fault/error shall occur before compliance with Clause 19 and 22.201 of Annex B or Annex S is impaired.

R.2.2.9 *Modification*:

The software and safety-related hardware under its control shall be initialized and shall terminate before compliance with Clause 19 and 22.201 of Annex B or Annex S is impaired.

Documents
Document Sharing Hub

Full document details: IEC 60335-2-2 2019 RLV