IEC 60335-2-96

Edition 2.0 2019-05
REDLINE VERSION

INTERNATIONAL STANDARD

colour inside

Household and similar electrical appliances – Safety – Part 2-96: Particular requirements for flexible sheet heating elements for room heating

IEC 60335-2-96:2019-05 RLV(en)

Documents
Document Sharing Hub

Full document details: IEC 60335-2-96 2019 RLV

THIS PUBLICATION IS COPYRIGHT PROTECTED
Copyright © 2019 IEC, Geneva, Switzerland

All rights reserved. Unless otherwise specified, no part of this publication may be reproduced or utilized in any form or by any means, electronic or mechanical, including photocopying and microfilm, without permission in writing from either IEC or IEC's member National Committee in the country of the requester. If you have any questions about IEC copyright or have an enquiry about obtaining additional rights to this publication, please contact the address below or your local IEC member National Committee for further information.

IEC Central Office
3, rue de Varembé
CH-1211 Geneva 20
Switzerland

Tel.: +41 22 919 02 11
info@iec.ch
www.iec.ch

About the IEC
The International Electrotechnical Commission (IEC) is the leading global organization that prepares and publishes International Standards for all electrical, electronic and related technologies.

About IEC publications
The technical content of IEC publications is kept under constant review by the IEC. Please make sure that you have the latest edition, a corrigendum or an amendment might have been published.

IEC publications search - webstore.iec.ch/advsearchform
The advanced search enables to find IEC publications by a variety of criteria (reference number, text, technical committee,…). It also gives information on projects, replaced and withdrawn publications.

IEC Just Published - webstore.iec.ch/justpublished
Stay up to date on all new IEC publications. Just Published details all new publications released. Available online and once a month by email.

IEC Customer Service Centre - webstore.iec.ch/csc
If you wish to give us your feedback on this publication or need further assistance, please contact the Customer Service Centre: sales@iec.ch.

Electropedia - www.electropedia.org
The world's leading online dictionary on electrotechnology, containing more than 22 000 terminological entries in English and French, with equivalent terms in 16 additional languages. Also known as the International Electrotechnical Vocabulary (IEV) online.

IEC Glossary - std.iec.ch/glossary
67 000 electrotechnical terminology entries in English and French extracted from the Terms and Definitions clause of IEC publications issued since 2002. Some entries have been collected from earlier publications of IEC TC 37, 77, 86 and CISPR.

Documents
Document Sharing Hub

Full document details: IEC 60335-2-96 2019 RLV

IEC 60335-2-96

Edition 2.0 2019-05
REDLINE VERSION

INTERNATIONAL STANDARD

colour inside

Household and similar electrical appliances – Safety – Part 2-96: Particular requirements for flexible sheet heating elements for room heating

INTERNATIONAL
ELECTROTECHNICAL
COMMISSION

ICS 97.100.10; 13.120

ISBN 978-2-8322-6977-0

Warning! Make sure that you obtained this publication from an authorized distributor.

® Registered trademark of the International Electrotechnical Commission

Documents
Document Sharing Hub

Full document details: IEC 60335-2-96 2019 RLV

CONTENTS

FOREWORD 4
INTRODUCTION 2
1 Scope 8
2 Normative references 8
3 Terms and definitions 9
4 General requirement 10
5 General conditions for the tests 10
6 Classification 11
7 Marking and instructions 11
8 Protection against access to live parts 17
9 Starting of motor-operated appliances 17
10 Power input and current 17
11 Heating 17
12 Void 21
13 Leakage current and electric strength at operating temperature 21
14 Transient overvoltages 22
15 Moisture resistance 22
16 Leakage current and electric strength 22
17 Overload protection of transformers and associated circuits 23
18 Endurance 23
19 Abnormal operation 26
20 Stability and mechanical hazards 27
21 Mechanical strength 27
22 Construction 28
23 Internal wiring 31
24 Components 31
25 Supply connection and external flexible cords 31
26 Terminals for external conductors 31
27 Provision for earthing 32
28 Screws and connections 32
29 Clearances, creepage distances and solid insulation 32
30 Resistance to heat and fire 32
31 Resistance to rusting 33
32 Radiation, toxicity and similar hazards 33
Annexes 47
Annex AA (informative) Summary of installation instructions 48
Bibliography 50

Figure 101 – Arrangement for testing heating units in timber ceilings 34
Figure 102 – Arrangement for testing modular heating units 35
Figure 103 – Arrangement for testing heating units in timber floors 36

AVA Documents
Document Sharing Hub

Full document details: IEC 60335-2-96 2019 RLV

Figure 104 – Arrangement for testing heating units ~~in~~ below concrete ~~floors~~ 37
Figure 105 – Arrangement for testing heating units in timber floors and ceilings in combination 38
Figure 106 – Jig for locating the contact needle 39
Figure 107 – Arrangement for testing heating units above timber floors 40
Figure 108 – Arrangement for testing heating units above concrete floors 41
Figure 109 – Arrangement for measuring capacitive currents 42
Figure 110 – Arrangement for testing heating units in timber walls 43
Figure 111 – Arrangement for testing heating units in both sides of timber wall applications 44
Figure 112 – Arrangement for testing heating units intended to be installed in a wall of concrete or similar material 45
Figure 113 – Arrangement for testing heating units against wall of concrete or similar material 46

Table 101 – Temperature rise limits for surfaces 21
Table AA.1 – Summary of installation instructions 48

Documents
Document Sharing Hub

Full document details: IEC 60335-2-96 2019 RLV

INTERNATIONAL ELECTROTECHNICAL COMMISSION

HOUSEHOLD AND SIMILAR ELECTRICAL APPLIANCES – SAFETY –

Part 2-96: Particular requirements for flexible sheet heating elements for room heating

FOREWORD

1) The International Electrotechnical Commission (IEC) is a worldwide organization for standardization comprising all national electrotechnical committees (IEC National Committees). The object of IEC is to promote international co-operation on all questions concerning standardization in the electrical and electronic fields. To this end and in addition to other activities, IEC publishes International Standards, Technical Specifications, Technical Reports, Publicly Available Specifications (PAS) and Guides (hereafter referred to as "IEC Publication(s)"). Their preparation is entrusted to technical committees; any IEC National Committee interested in the subject dealt with may participate in this preparatory work. International, governmental and non-governmental organizations liaising with the IEC also participate in this preparation. IEC collaborates closely with the International Organization for Standardization (ISO) in accordance with conditions determined by agreement between the two organizations.
2) The formal decisions or agreements of IEC on technical matters express, as nearly as possible, an international consensus of opinion on the relevant subjects since each technical committee has representation from all interested IEC National Committees.
3) IEC Publications have the form of recommendations for international use and are accepted by IEC National Committees in that sense. While all reasonable efforts are made to ensure that the technical content of IEC Publications is accurate, IEC cannot be held responsible for the way in which they are used or for any misinterpretation by any end user.
4) In order to promote international uniformity, IEC National Committees undertake to apply IEC Publications transparently to the maximum extent possible in their national and regional publications. Any divergence between any IEC Publication and the corresponding national or regional publication shall be clearly indicated in the latter.
5) IEC itself does not provide any attestation of conformity. Independent certification bodies provide conformity assessment services and, in some areas, access to IEC marks of conformity. IEC is not responsible for any services carried out by independent certification bodies.
6) All users should ensure that they have the latest edition of this publication.
7) No liability shall attach to IEC or its directors, employees, servants or agents including individual experts and members of its technical committees and IEC National Committees for any personal injury, property damage or other damage of any nature whatsoever, whether direct or indirect, or for costs (including legal fees) and expenses arising out of the publication, use of, or reliance upon, this IEC Publication or any other IEC Publications.
8) Attention is drawn to the Normative references cited in this publication. Use of the referenced publications is indispensable for the correct application of this publication.
9) Attention is drawn to the possibility that some of the elements of this IEC Publication may be the subject of patent rights. IEC shall not be held responsible for identifying any or all such patent rights.

This redline version of the official IEC Standard allows the user to identify the changes made to the previous edition. A vertical bar appears in the margin wherever a change has been made. Additions are in green text, deletions are in strikethrough red text.

Documents
Document Sharing Hub

Full document details: IEC 60335-2-96 2019 RLV

International Standard IEC 60335-2-96 has been prepared by IEC technical committee 61: Safety of household and similar electrical appliances.

This second edition cancels and replaces the first edition published in 2002, Amendment 1:2003 and Amendment 2:2008. This edition constitutes a technical revision.

This edition includes the following significant technical changes with respect to the first edition:

– aligns the text with IEC 60335-1:2010, and its Amendments 1 and 2;
– some notes have been converted to normative text or deleted (5.6, 7.12.1, 10.1, 11.2.103, 13.1, 13.2, 16.2, 16.3, 18.101, 18.102.5, 21.1, 22.103, 22.105, 22.106);
– the strength test for heating units incorporating insulated wires intended to be installed in floors has been modified a (21.103);
– the scope and specific requirements have been added for heating units installed in walls below a height of 1,2 m (6.2, 7.1, 7.12.1, 7.12.6, 7.101, 11.2, 19.2, 22.106, 24.102, Annex AA).

The text of this International Standard is based on the following documents:

FDIS	Report on voting
61/5789/FDIS	61/5806/RVD

Full information on the voting for the approval of this International Standard can be found in the report on voting indicated in the above table.

This document has been drafted in accordance with the ISO/IEC Directives, Part 2.

A list of all parts of the IEC 60335 series, under the general title: *Household and similar electrical appliances – Safety*, can be found on the IEC website.

This part 2 is to be used in conjunction with the latest edition of IEC 60335-1 and its amendments. It was established on the basis of the fifth edition (2010) of that standard.

NOTE 1 When “Part 1” is mentioned in this standard, it refers to IEC 60335-1.

This part 2 supplements or modifies the corresponding clauses in IEC 60335-1, so as to convert that publication into the IEC standard: Particular requirements for flexible sheet heating elements for room heating.

When a particular subclause of Part 1 is not mentioned in this part 2, that subclause applies as far as is reasonable. When this standard states "addition", "modification" or "replacement", the relevant text in Part 1 is to be adapted accordingly.

NOTE 2 The following numbering system is used:

– subclauses, tables and figures that are numbered starting from 101 are additional to those in Part 1;
– unless notes are in a new subclause or involve notes in Part 1, they are numbered starting from 101, including those in a replaced clause or subclause;
– additional annexes are lettered AA, BB, etc.

NOTE 3 The following print types are used:

– requirements: in roman type;
– *test specifications: in italic type*;
– notes: in small roman type.

Words in **bold** in the text are defined in Clause 3. When a definition concerns an adjective, the adjective and the associated noun are also in bold.

AVA Documents
Document Sharing Hub

Full document details: IEC 60335-2-96 2019 RLV

The committee has decided that the contents of this document will remain unchanged until the stability date indicated on the IEC website under "http://webstore.iec.ch" in the data related to the specific document. At this date, the document will be

- reconfirmed,
- withdrawn,
- replaced by a revised edition, or
- amended.

NOTE 4 The attention of National Committees is drawn to the fact that equipment manufacturers and testing organizations may need a transitional period following publication of a new, amended or revised IEC publication in which to make products in accordance with the new requirements and to equip themselves for conducting new or revised tests.

It is the recommendation of the committee that the content of this publication be adopted for implementation nationally not earlier than 12 months or later than 36 months from the date of publication.

The following additional differences exist in the countries indicated below.

– 1: Flexible sheet heating elements that are cut on site are not allowed (France).
– 1: The intended installation is not to include walls (USA).
– 7.1: The intended installation is not to include walls (USA).
– 7.12.1 c): The instructions in timber floors shall state that the heating unit is to be covered with additional insulation, be supplied through an isolating transformer, or be class II (Sweden).
– 7.12.1 c): The instructions need not refer to residual current devices (USA).
– Clause 18: The tests are different (USA).
– 22.102: The test is different (USA).
– 22.103: The test is different (USA).
– 25.3: Heating units are not allowed to incorporate supply cords (USA).

IMPORTANT – The “colour inside” logo on the cover page of this publication indicates that it contains colours which are considered to be useful for the correct understanding of its contents. Users should therefore print this publication using a colour printer.

Documents
Document Sharing Hub

Full document details: IEC 60335-2-96 2019 RLV

INTRODUCTION

It has been assumed in the drafting of this International Standard that the execution of its provisions is entrusted to appropriately qualified and experienced persons.

This standard recognizes the internationally accepted level of protection against hazards such as electrical, mechanical, thermal, fire and radiation of appliances when operated as in normal use taking into account the manufacturer's instructions. It also covers abnormal situations that can be expected in practice and takes into account the way in which electromagnetic phenomena can affect the safe operation of appliances.

This standard takes into account the requirements of IEC 60364 as far as possible so that there is compatibility with the wiring rules when the appliance is connected to the supply mains. However, national wiring rules may differ.

If an appliance within the scope of this standard also incorporates functions that are covered by another part 2 of IEC 60335, the relevant part 2 is applied to each function separately, as far as is reasonable. If applicable, the influence of one function on the other is taken into account.

When a part 2 standard does not include additional requirements to cover hazards dealt with in Part 1, Part 1 applies.

NOTE 1 This means that the technical committees responsible for the part 2 standards have determined that it is not necessary to specify particular requirements for the appliance in question over and above the general requirements.

This standard is a product family standard dealing with the safety of appliances and takes precedence over horizontal and generic standards covering the same subject.

NOTE 2 Horizontal and generic standards covering a hazard are not applicable since they have been taken into consideration when developing the general and particular requirements for the IEC 60335 series of standards. For example, in the case of temperature requirements for surfaces on many appliances, generic standards, such as ISO 13732-1 for hot surfaces, are not applicable in addition to Part 1 or part 2 standards.

An appliance that complies with the text of this standard will not necessarily be considered to comply with the safety principles of the standard if, when examined and tested, it is found to have other features which impair the level of safety covered by these requirements.

An appliance employing materials or having forms of construction differing from those detailed in the requirements of this standard may be examined and tested according to the intent of the requirements and, if found to be substantially equivalent, may be considered to comply with the standard.

Documents
Document Sharing Hub

Full document details: IEC 60335-2-96 2019 RLV

HOUSEHOLD AND SIMILAR ELECTRICAL APPLIANCES – SAFETY –

Part 2-96: Particular requirements for flexible sheet heating elements for room heating

1 Scope

This clause of Part 1 is replaced by the following.

This part of IEC 60335 deals with the safety of **flexible sheet heating elements** intended to be incorporated into ~~the building to heat the room in which they are located~~ floors and walls below 1,2 m and above 2,3 m and in ceilings, their **rated voltage** being not more than 250 V for single-phase installations and 480 V for other installations.

Flexible sheet heating elements are converted into **heating units** that are incorporated in the building in accordance with the instructions after which the required level of protection against hazards is achieved.

NOTE 101 Attention is drawn to the fact that

– in many countries, different wiring rules apply;

– for **heating units** intended to be used in vehicles or on board ships or aircraft, additional requirements ~~may~~ can be necessary;

– in many countries, additional requirements are specified by the national authorities for fire protection, the national authorities for building regulations, the national health authorities, the national authorities responsible for the protection of labour and similar authorities.

NOTE 102 This standard does not apply to

– **heating units** intended exclusively for industrial purposes;

– **heating units** intended to be used in locations where special conditions prevail, such as the presence of a corrosive or explosive atmosphere (dust, vapour or gas);

– blankets, pads, clothing and similar flexible heating appliances (IEC 60335-2-17);

– foot warmers and heating mats (IEC 60335-2-81);

~~– heating appliances intended to be used under a carpet;~~

– heated carpets and for heating units for room heating installed under removable floor coverings (IEC 60335-2-106);

– **flexible sheet heating elements** incorporated in other appliances.

2 Normative references

This clause of Part 1 is applicable except as follows.

Addition:

IEC 60364-7-701:2006, *Low-voltage electrical installations~~ of buildings~~ – Part 7-701: Requirements for special installations or locations –~~ Section 701: Electrical installations in bathrooms~~ Locations containing a bath or shower*

IEC 60884-1:~~1995~~2002, *Plugs and socket-outlets for household and similar purposes – Part 1: General requirements*

Documents
Document Sharing Hub
Full document details: IEC 60335-2-96 2019 RLV

IEC 60884-1:2002/AMD1:2006
IEC 60884-1:2002/AMD2:2013[1]

ISO 3864-1, *Graphical symbols – Safety colours and safety signs – Part 1: Design principles for safety signs and safety markings*

3 Terms and definitions

This clause of Part 1 is applicable except as follows.

3.1 Definitions relating to physical characteristics

Replacement:

3.1.9
normal operation
operation of the **heating unit** after incorporation into the building in accordance with the instructions.

Flexible sheet heating elements, the current of which can vary depending on the length of the **flexible sheet heating elements** and those that can supply other **flexible sheet heating elements** are loaded so that the current marked on the **flexible sheet heating elements** flows through the **heating unit**.

Heating units for **storage heating applications** are charged for 75 % of the **rated charging period**.

3.1.101
rated charging period
longest uninterrupted charging period assigned to the **heating unit** by the manufacturer

3.2 Definitions relating to means of connection

Replacement:

3.2.1
supply leads
set of wires intended for connecting the appliance to fixed wiring

3.5 Definitions relating to types of appliances

3.5.4 *Addition:*

Heating units are considered to be **fixed appliances**.

3.5.101
flexible sheet heating element
heating element consisting of sheets of electrical insulation laminated with electrical resistance material, or a base material on which electrically insulated heating wires are fixed

Note 1 to entry: This definition does not preclude other methods of combining the insulation and resistance materials.

[1] There exists a consolidated edition 3.2:2013 that includes edition 3:2002, its Amendment 1:2006 and Amendment 2:2013.

AVA Documents
Document Sharing Hub

3.5.102
heating unit
flexible sheet heating element equipped with means of connection to the supply and with insulation surrounding **live parts**

Note 1 to entry: The **heating unit** can be partly or completely prefabricated.

3.5.103
modular heating unit
prefabricated assembly consisting of a **heating unit** and other materials to form a rigid construction for mounting on a ceiling

3.5.104
storage heating application
use of **heating units** to heat thermal accumulating material

Note 1 to entry: The heat is discharged naturally, the heat output being varied by adjusting the energy input.

~~**3.105**~~
~~**rated charging period**~~
~~longest uninterrupted charging period assigned to the **heating unit** by the manufacturer~~

3.6 Definitions relating to parts of an appliance

3.~~106~~6.101
electrode
conductive part incorporated in a **flexible sheet heating element** for supplying the heating material

4 General requirement

This clause of Part 1 is applicable.

5 General conditions for the tests

This clause of Part 1 is applicable except as follows.

5.2 *Replacement:*

In general, eight samples are required for the tests.

The tests of 13.3 and of Clauses 15 and 16 are carried out on one sample.

The tests of 18.101 and of Clause 30 are carried out on one sample.

The test of 21.102 is carried out on two samples. One of these samples is also used for the test of 22.101.

The test of 22.103 is carried out on one sample.

The remaining tests are carried out on the sixth sample. The other two samples are required for incorporating into the test arrangement to create the necessary thermal environment.

NOTE 101 Additional samples ~~may~~ can be necessary if tests have to be repeated.

Nine samples of **modular heating units** are necessary for the tests of 11.2.102.

Documents
Document Sharing Hub

Full document details: IEC 60335-2-96 2019 RLV

Additional samples are necessary if the tests of 18.102 are carried out.

Additional samples ~~may~~ can be necessary for testing different sizes of **heating units**.

The test of 22.105 is carried out on the same sample as that used for the test of 13.2.

*Two samples of the additional layer of material, of sufficient size to cover the **heating unit**, are required if the test of 21.104 is carried out.*

5.3 *Addition:*

The test of 22.105 is carried out after the test of 13.2.

5.6 *Addition*:

***Thermostats** sensitive to room air temperature or outdoor air temperature are short circuited. However, the **thermostat** is not short circuited if it can be set so that it does not cycle.*

~~NOTE 101 For electronic controls, it may be necessary to render the sensing elements inoperative instead of short circuiting the **thermostat**.~~

5.10 *Addition:*

*However, for **flexible sheet heating elements** that are cut on site, the tests are carried out after connecting the **supply leads** and protecting the edges in accordance with the instructions.*

5.101 ***Heating units** intended to be installed in walls above a height of 2,3 m are subjected to the tests for installation in ceilings.*

6 Classification

This clause of Part 1 is applicable except as follows.

6.1 *Addition:*

Heating units need not be classified. However, if a **heating unit** is classified, the relevant requirements apply.

6.2 *Addition:*

Heating units for installation in ~~a floor of~~ concrete or similar material shall be at least IPX7.

Other **heating units** shall be at least IPX1.

7 Marking and instructions

This clause of Part 1 is applicable except as follows.

7.1 *Modification:*

Instead of the marking of **rated power input** or **rated current** the following applies:

– **heating units** shall be marked with their **rated power input**;

Documents
Document Sharing Hub

Full document details: IEC 60335-2-96 2019 RLV

– **flexible sheet heating elements** without connection between adjacent elements shall be individually marked with their **rated power input**;
– other **flexible sheet heating elements** shall be marked with their **rated power input** per metre length.

Flexible sheet heating elements shall be marked with their maximum current if

– the current can vary depending on the length of the **flexible sheet heating element**;
– other **flexible sheet heating elements** can be supplied through them.

Addition:

Flexible sheet heating elements shall be marked with:

– the indication of orientation, unless **heating units** are symmetrical;
– the intended installation (ceilings, walls between 0,2 m and 1,2 m and/or above 2,3 m, or floors);
– the heating mode (direct heating or storage heating), unless intended for both modes.

If the **heating unit** is only intended for application in floors of concrete or similar materials, it shall be marked ~~accordingly~~ with the symbol for installation in concrete or similar materials.

~~NOTE 101 The marking may be in the form of symbols that are explained in the instructions.~~

The marking shall be repeated at least once every 0,5 m of the **flexible sheet heating element** or on every section that can be cut to form a **heating unit**.

Flexible sheet heating elements that can be cut on site and have to be cut at specified places shall be marked appropriately.

Appliances with separate controls, without a control, or with **detachable controls** shall be marked with the reference number or by other means of identification of the control.

7.6 *Addition:*

direct ceiling heating

direct floor heating

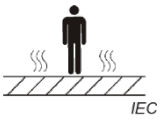

floor storage heating

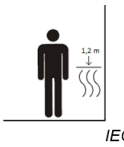

wall heating

Documents
Document Sharing Hub
Full document details: IEC 60335-2-96 2019 RLV

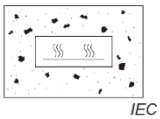

installation in concrete or similar material

These symbols are information signs and, except for the colours, the rules of ISO 3864-1 apply.

7.12.1 *Addition:*

Instructions shall be provided. They shall include

a) explanation of the marking and symbols, if necessary;

b) information for incorporating the **heating units** into the building, in particular the following:

- precautions to be taken to avoid damage during installation, such as dropping sharp objects or stepping on the **heating unit**, or careless pouring of concrete;
- dimensions and distances to be taken into account;
- a statement that the **heating units** have to be separated from other heat sources such as luminaires and chimneys;
- description of the fixing areas of the **heating unit** and the separate screen, if applicable;
- guidance on how to avoid air gaps between the **flexible sheet heating element** and the screed of concrete floors;
- guidance on how to avoid damage to a **flexible sheet heating element** and its terminations in timber constructions due to relative movement after installation;
- ~~a warning against incorporating **heating units** below a height of 2,3 m into walls or into ceilings inclined at less than 45° to the vertical;~~
- the lowest ambient temperature at which **heating units** may be installed;
- the minimum radius for bending the **flexible sheet heating element**, if applicable;
- a statement that **heating units** shall not cross expansion joints of the building or structure;
- a statement to ensure that attachment of room fittings does not restrict heat emission from heated areas.

Except for **modular heating units**, the instructions shall include the following:

- precautions to be taken to avoid creasing the **flexible sheet heating element**;
- a statement that the **heating unit** is not to be installed on irregular surfaces;
- a description of the intended orientation and a statement that the **heating unit** is to be installed ~~with the correct orientation~~ in this way (for **heating units** having non-symmetric construction);

c) a statement that the installation is to be in accordance with the national wiring rules. The substance of the following information shall be included:

- the **heating units** are to be supplied through a residual current device (RCD) having a rated residual operating current not exceeding 30 mA. The RCD shall not be of the time delayed type. Alternatively, except for installations in floors surrounding swimming pools or walls below a height of 2,3 m, they may be supplied through an isolating transformer. This statement is not required for **class III heating units** and for applications in
  - timber floors provided that the instructions for installation state that there is to be an air gap between the **heating unit** and the floor;
  - timber ceilings;

Documents
Document Sharing Hub

Full document details: IEC 60335-2-96 2019 RLV

- floors of concrete or similar material in dry locations (dry locations are areas outside zone 3 as defined in IEC 60364-7-701) as long as the **basic insulation** and additional electrical insulation each withstand the electric strength test of 16.3 for **reinforced insulation**;

– how to connect **heating units** to the supply, giving the cross-sectional area of the leads, if applicable;

– how to interconnect the **heating units**, giving the cross-sectional area of the leads, if applicable;

– **heating units** shall be installed to avoid increasing the ambient temperature of any existing electrical installation;

d) the maximum current allowed to flow through one **heating unit** when other units are supplied through it or when the current can vary depending on its length;

e) list of controls, unless they are incorporated into the **heating unit**;

~~NOTE 101 Only those controls that are necessary to ensure compliance with the standard need be listed.~~

f) the maximum thermal resistance between the **heating unit** and the room;

g) the type of covering materials that are allowed to be used in conjunction with the **heating units** with a statement that the advice of the manufacturer is to be requested before materials other than those recommended are used; the thickness of covering materials, which for floors shall be at least 5 mm;

h) characteristics of the thermal insulation that is to be inserted between separate **heating units** installed to heat a floor and the ceiling below it;

i) characteristics of the thermal insulation that is to be inserted between separate **heating units** installed to heat both sides of a wall;

j) specification of any adhesive to be used;

k) a statement that a label is to be fixed adjacent to the distribution board and that it has to contain the locations of the **heating units**;

l) if the **heating units** are installed in a suspended ceiling, or are accessible from the roof space, a statement that a label giving this information is to be fixed to the access point of the ceiling;

m) in applications in timber floors, a statement indicating that **heating units** having **basic insulation** only shall be covered by additional electrical insulation or supplied through an isolating transformer.

NOTE ~~102~~101 A summary of particular installation requirements for different applications is given in Annex AA.

7.12.101 The instructions for applications in floors of concrete or similar material or under tiles shall state that

a) a grid is to be installed above the **heating unit**. The grid is to

– be protected against corrosion but not electrically insulated;

– be electrically and mechanically equivalent to a steel grid having a mesh not more than 50 mm × 50 mm and a wire diameter of 1 mm, unless the grid covers

- **class II heating units**;
- **heating units** installed with additional electrical insulation;

– fully cover the **heating unit** including the fixing areas. It may cover several **heating units**;

– be connected to earth;

– be fitted with terminals suitable for the connection of two conductors each having a nominal cross-sectional area of 2,5 mm^2;

– be checked for electrical continuity during installation.

The grid is not required for

Documents
Document Sharing Hub
Full document details: IEC 60335-2-96 2019 RLV

- **class III heating units**;
- **class II heating units** supplied through an isolating transformer;
- **class II heating units** that are installed in dry locations (dry locations are areas outside zone 3 as defined in IEC 60364-7-701) and are supplied through a residual current device (RCD);
- **heating units** installed in dry locations (dry locations are areas outside zone 3 as defined in IEC 60364-7-701) if the **basic insulation** and additional electrical insulation each withstand the electric strength test of 16.3 of **reinforced insulation**;
- **heating units** incorporating a metallic shield or braid having a resistance per unit length equivalent to that of 0,5 mm^2 copper wire;

b) when the **heating units** have been positioned, they must be covered with an additional layer of ~~polyethylene film approximately 250 µm thick or other~~ material ~~having similar mechanical properties~~ for mechanical protection. If the **heating units** are placed on concrete, a similar layer is to be inserted between the **heating unit** and the concrete. Adjacent layers are to overlap and be fixed to each other. The layer is to extend up each wall to the surface level of the screed. These statements are not required if

- screened insulated heating wires are covered with a sheath complying with 21.103;
- the additional electrical insulation complies with the test of 21.102;

c) when **heating units** having **basic insulation** only, other than those supplied at **safety extra-low voltage**, are provided with additional electrical insulation, this additional insulation is to be placed directly on the **heating unit**;

d) **class II heating units** are to be installed at a distance of at least 30 mm from conductive parts of the building, such as water pipes.

NOTE These instructions apply to applications where the concrete or similar material is laid on a timber floor.

7.12.102 The instructions for applications in metallic ceilings or metallic floors for **heating units** with **basic insulation** only, other than those supplied at **safety extra-low voltage**, shall state that

a) the **flexible sheet heating element** is to be fully covered by the ceiling or floor;

b) the metallic parts of the ceiling or floor are to be earthed. The instructions shall state that they have to be fitted with terminals suitable for the connection of two conductors each having a nominal cross-sectional area of 2,5 mm^2 and explain how the connection to the earthing terminal is to be made to ensure a low resistance. The statements regarding the need for earthing are not required if it is stated that a layer of additional electrical insulation is to be installed between the **heating unit** and the ceiling. If this insulation is not provided, the name of the manufacturer and reference of the insulation shall be given.

7.12.103 The instructions for applications on floors where the **heating units** are to be covered by tiles shall state that the **heating units** are to be covered by additional electrical insulation, unless the **heating units** are **class I**, **class II** or **class III**.

7.12.104 The instructions for **flexible sheet heating elements** that can be cut on site shall state that this work is only to be carried out by persons authorized by the manufacturer and shall give information on how to

- cut the **flexible sheet heating elements**;
- protect the edges of the **flexible sheet heating elements**;
- connect the **supply leads** and the interconnection leads, and insulate the connections.

7.12.105 The instructions for **heating units** for **storage heating applications** shall specify the **rated charging period**.

7.12.106 Unless **heating units**

Documents
Document Sharing Hub
Full document details: IEC 60335-2-96 2019 RLV

– incorporate a metallic shield or braid having a resistance per unit length equivalent to that of 0,5 mm^2 copper wire; or

– are of **class III**; or

– consist of a base material on which metallically screened electrically insulated heating wires are fixed and are for application in walls below a height of 1,2 m,

their instructions shall state that the **heating units** shall be of the type constructed with an electrical conductive screen. The **heating unit** shall be installed so that the screen is towards the covering material.

The instructions for **heating units** which are for application in walls below a height of 1,2 m and with a separate electrical conductive screen shall state that the screen shall be placed between the covering material and the **heating unit**.

The instructions for **heating units** which are for application in walls, shall state that the heating unit shall be installed:

– between 0,2 m and 1,2 m above the floor; or

– above 2,3 m above the floor.

The screen is to be connected to the earthing conductor of the fixed installation.

If the **heating unit** is installed in an internal wall with the distance between the wall materials less than 50 mm, the **heating unit** shall be installed so that the screen is towards the wall covering material on both sides of the **heating unit**.

The instructions for **heating units** with **detachable protection circuit** shall give instructions for their installation.

7.14 *Modification:*

The test with petroleum spirit is not carried out.

Addition:

If symbols are used relating to the intended installation or heating mode, the superimposed rectangle shall have a height of at least 15 mm.

7.15 *Modification:*

Only the requirements for switches and controls are applicable.

7.101 A label that contains sufficient space for the locations of the **heating units** to be listed shall be provided for each installation giving

– the name, trade mark or identification mark of the manufacturer or responsible vendor;

– the model or type reference.

It shall state the substance of the following:

– **flexible sheet heating units** are installed in the ceiling/wall/floor, as applicable;

– do not restrict the thermal emission of the heated ceiling/wall/floor, as applicable;

~~NOTE The specific application is to be stated on the label.~~

– do not affix materials other than those recommended;

– do not insert nails, screws and do not drill in other than heating free areas;

Documents
Document Sharing Hub

Full document details: IEC 60335-2-96 2019 RLV

– this label shall be fixed to or adjacent to the distribution board that supplies the **heating unit**.

If **heating units** are installed in walls below a height of 1,2 m, the label shall state the locations of the heating free areas or heated areas.

Compliance is checked by inspection.

8 Protection against access to live parts

This clause of Part 1 is applicable.

9 Starting of motor-operated appliances

This clause of Part 1 is not applicable.

10 Power input and current

This clause of Part 1 is applicable except as follows.

10.1 *Addition:*

~~NOTE 101~~ The requirement also applies to the **rated power input** per metre length of **flexible sheet heating elements**.

11 Heating

This clause of Part 1 is applicable except as follows.

11.1 *Addition:*

The tests are carried out in a room that is maintained at an ambient temperature of 20 °C ± 2 °C.

11.2 *Replacement:*

Heating units *intended to be installed in ceilings are positioned in accordance with 11.2.101.*

Modular heating units *for suspended ceilings are positioned in accordance with 11.2.102.*

Heating units *intended to be installed in floors are positioned in accordance with 11.2.103.*

Separate ***heating units*** *intended to heat a timber floor and the ceiling below it are positioned in accordance with 11.2.104.*

Heating units *intended to be installed in timber walls below 1,2 m are positioned in accordance with 11.2.105.*

Separate ***heating units*** *intended to heat both sides of a timber wall are positioned in accordance with 11.2.106.*

Heating units *intended to be installed in walls or against walls of concrete or similar material are positioned in accordance with 11.2.107.*

AVA Documents
Document Sharing Hub

Full document details: IEC 60335-2-96 2019 RLV

*If a **heating unit** is provided with a **thermostat** having a separate sensor, the sensor is located on the centreline of one of the adjacent **heating units** but minimum 0,3 m outside the area of the thermal insulation placed on the floor and minimum 0,3 m from the edge of the heated area.*

11.2.101 ***Heating units** intended to be installed in a timber ceiling are placed in a test framework, as shown in Figure 101. An area of at least 4 m^2 having a shorter dimension not less than 2 m is covered by at least three **heating units**, the unit under test being placed in the middle. The **heating units** are installed in accordance with the instructions, attention being paid to where they can be located under parts of timber structures such as cross-members. The upper side of the **heating units** is fully covered by a layer of thermal insulation having a thermal resistance of approximately 5 m^{2}K/W. The underside of the **heating units** is covered with the most unfavourable material listed in the instructions.*

The test framework is suspended so that there is a space having a height of approximately 0,3 m above its upper surface and at least 1,5 m below the lower surface. The test framework is surrounded by wooden boards extending approximately 0,2 m below its lower surface.

If the instruction for installation allows the use of gypsum boards as a covering material, an additional test is carried out using this material.

***Heating units** intended to be installed in a metallic ceiling are installed in accordance with the instructions.*

11.2.102 *Nine **modular heating units** are installed in accordance with the instructions. They are arranged in a three by three matrix, the **heating unit** under test being located in the centre as shown in Figure 102. However, if a dimension of the matrix is less than 1,8 m, additional **heating units** are installed. The upper surface of the matrix is fully covered with a layer of thermal insulation so that the total thermal resistance above the **flexible sheet heating elements** is approximately 5 m^{2}K/W. The insulation is positioned so that it is in full contact with the top surfaces of the **heating units**.*

The test framework is suspended so that there is a space having a height of approximately 0,3 m above its upper surface and at least 1,5 m below its lower surface. The test framework is surrounded by wooden boards extending approximately 0,2 m below its lower surface and up to the ceiling of the room.

11.2.103 ***Heating units** intended to be installed in a timber floor are placed in a test framework, as shown in Figure 103. **Heating units** intended to be installed on top of a timber floor are placed in a test framework as shown in Figure 107. An area of at least 4 m^2 having a shorter dimension not less than 2 m is covered by at least three **heating units**, the unit under test being placed in the middle. ~~The underside of the **heating units** is covered by a layer of~~ Thermal insulation having a thermal resistance of approximately 5 m^{2}K/W is located below the **heating units**. The **heating units** are installed in accordance with the instructions for installation, attention being paid to where they can be located over parts of the timber structure such as cross-members. The upper side of the framework is covered with the most unfavourable floor with regard to the total thermal resistance in accordance with the instructions for installation, an air gap being maintained ~~between the floor and the **heating unit**~~ as shown in the figures, if specified in the instructions.*

The test framework has a free space of at least 0,1 m below its lower surface and at least 1,5 m above its upper surface. The test framework is surrounded by wooden boards extending at least 1 m above its upper surface.

*A piece of thermal insulation having a thermal resistance of approximately 1,25 m^{2}K/W is placed on the floor centrally across the **heating units**, as shown in Figure 103 and Figure 107. The insulation has a length of 0,8 m and a width equal to that of the **heating unit**.*

Documents
Document Sharing Hub
Full document details: IEC 60335-2-96 2019 RLV

Heating units *intended to be installed in a floor of concrete or similar material are placed as shown in Figure 104.* ***Heating units*** *intended to be installed above a floor of concrete or similar material are placed as shown in Figure 108.* ***Heating units*** *are installed in accordance with the instructions for installation, any specified additional electrical insulation being placed over them. An area of at least 4 m^2, having a shorter dimension not less than 2 m, is covered by at least three* ***heating units****, the unit under test being placed in the middle.* ~~*The* ***heating units*** *are placed on*~~ *Thermal insulation having a thermal resistance of approximately 2,5 m^{2}K/W* ~~*that*~~ *is located underneath the* ***heating units****. For* ***heating units*** *intended to be installed in concrete or similar material, the thermal insulation is supported by a dull black painted plywood board approximately 20 mm thick.*

The ***heating units*** *are covered with the* ~~*polyethylene film or similar material*~~ *additional layer, if specified in the instructions. They are then covered with a layer of concrete approximately 40 mm thick or the* ~~*maximum*~~ *thickness stated in the instructions, whichever is greater.* ~~*A grid is included in the concrete if specified.*~~ *Instead of pouring concrete* ~~*onto the* ***heating units****, they may be covered by*~~ *the concrete layer may consist of concrete slabs 40 mm thick and having dimensions at least 500 mm × 500 mm, the gaps between the slabs being filled with dry sand. If the* ***heating unit*** *is intended for a* ***storage heating application****, the thickness of the concrete is increased to 80 mm.* ~~*If the* ***heating unit*** *is intended for a* ***storage heating application****, the thickness of the concrete is increased to 80 mm. The concrete is covered with the most unfavourable flooring material listed in the instructions.*~~ *The concrete layer is not included for* ***heating units*** *intended to be installed on top of a concrete floor. A grid is included in the test arrangement if specified. The floor is covered with the most unfavourable flooring material listed in the instructions for installation. There is a free space of at least 1,5 m above the floor.*

~~NOTE 1~~ *Thermal insulation may be used instead to represent the most unfavourable flooring material.*

A piece of thermal insulation having a thermal resistance of approximately 1,25 m^{2}K/W is placed on the floor centrally across the ***heating units****, as shown in Figures 104 and 108. The insulation has a length of 0,8 m and a width equal to that of the* ***heating unit****.*

~~NOTE 2~~ *Part of the thickness of concrete may be replaced by sand provided that the thermal resistance is maintained.*

~~NOTE 3~~ *Care* ~~*is to*~~ *shall be taken to minimize air gaps in the floor and between the slabs of concrete.*

~~NOTE 4~~ *In order to measure the highest temperature rise of the floor, it may be necessary to repeat the test with the covering material having the minimum thickness specified in the instructions.*

Heating units *intended to be installed in metallic floors are installed in accordance with the instructions.*

11.2.104 *Separate* ***heating units*** *intended to heat a timber floor and the ceiling below it are installed in a test framework shown in Figure 105 in accordance with the instructions. An area of at least 4 m^2 having a shorter dimension not less than 2,0 m is covered by two sets of at least three* ***heating units*** *separated by thermal insulation. The* ***heating units*** *under test are placed in the middle, one over the other. The insulation has a thermal resistance of approximately 1,45 m^{2}K/W unless a lower value is specified in the instructions. The other details for the arrangement are as specified in 11.2.101 and 11.2.103 for timber constructions.*

11.2.105 ***Heating units*** *intended to be installed in timber walls below 1,2 m are placed in a test framework, as shown in Figure 110. An area of at least 4 m^2 having a shorter dimension not less than 2 m is covered by at least three* ***heating units****, the unit under test being placed in the middle. The* ***heating units*** *are installed in accordance with the instructions, attention*

AVA Documents
Document Sharing Hub

Full document details: IEC 60335-2-96 2019 RLV

being paid to where they can be located under parts of timber structures such as cross-members.

*The side, towards the room to be heated, of the **heating units** is covered with the most unfavourable covering material listed in the instructions. The side without the **heating units** is fully covered by a layer of thermal insulation having a thermal resistance of approximately 5 m²K/W and which is held against the **heating unit** according to the instructions for installation.*

*Covering material is added even to the side of the wall without the **heating units**. No air gap is to be left between the covering material and the thermal insulation.*

The test framework is situated so that there is a space having a width of approximately 0,3 m from its unheated surface and at least 1,5 m from the surface to be heated. The test framework is surrounded by wooden boards extending approximately 0,2 m from the covering material.

*A piece of thermal insulation having a thermal resistance of approximately 1,25 m²K/W is placed against the wall towards the room centrally across the **heating units**, as shown in Figure 110. The insulation has a length of 0,8 m and a width equal to that of the **heating unit**.*

If the instruction for installation allows the use of gypsum boards as a covering material, an additional test is carried out using this material.

***Heating units** intended to be installed in a metallic wall are installed in accordance with the instructions.*

11.2.106 *Separate **heating units** intended to heat a timber wall on both sides are installed in a test framework shown in Figure 111 in accordance with the instructions. An area of at least 4 m² having a shorter dimension not less than 2,0 m is covered by two sets of at least three **heating units** separated by a thermal insulation. The **heating units** under test are placed in the middle, one opposite the other. The insulation has a thermal resistance of approximately 1,45 m²K/W unless a lower value is specified in the instructions. The test framework is surrounded by wooden boards extending approximately 0,2 m from the covering material. The other details for the arrangement are as specified in 11.2.101 and 11.2.103 for timber constructions.*

*A piece of thermal insulation having a thermal resistance of approximately 0,9 m²K/W is placed against one of the walls centrally across the **heating units**, as shown in Figure 111. The insulation has a length of 0,8 m and a width equal to that of the **heating unit**.*

11.2.107 ***Heating units** intended to be installed in a wall of concrete or similar material are placed as shown in Figure 112. **Heating units** intended to be installed against a wall of concrete or similar material are placed as shown in Figure 113. **Heating units** are installed in accordance with the instructions for installation, any specified additional electrical insulation being placed against them. An area of at least 4 m², having a shorter dimension not less than 2 m, is covered by at least three **heating units**, the unit under test being placed in the middle. Thermal insulation having a thermal resistance of approximately 2,5 m²K/W is located on the back side of the **heating units**. For **heating units** intended to be installed in concrete or similar material, the thermal insulation is supported by a dull black painted plywood board approximately 20 mm thick.*

*The **heating units** are covered with the additional layer, if specified in the instructions. They are then covered with a layer of concrete approximately 40 mm thick or the thickness stated in the instructions, whichever is greater. Instead of pouring concrete, the concrete layer may consist of concrete slabs 40 mm thick and having dimensions at least 500 mm × 500 mm, the gaps between the slabs being filled with fine grain concrete. If the **heating unit** is intended for a **storage heating application**, the thickness of the concrete is increased to 80 mm. The concrete layer is not included for **heating units** intended to be installed against a concrete*

AVA Documents
Document Sharing Hub

wall. A grid is included in the test arrangement if specified. The wall is covered with the most unfavourable covering material listed in the instructions for installation. There is a free space of at least 1 5 m from the wall. The test framework is surrounded by wooden boards extending approximately 0,2 m from the covering material.

Care shall be taken to minimize air gaps in the wall and between the slabs of concrete.

11.7 *Replacement:*

***Heating units** are operated until steady conditions are established.*

***Heating units** for **storage heating applications** are operated as specified for **normal operation** or until the charging control operates for the first time if this occurs first.*

11.8 *Addition:*

The temperature rise of surfaces shall not exceed the values shown in Table 101.

Table 101 – Temperature rise limits for surfaces

Part	*Temperature rise* K
Floor surface, 5 cm outside the edge of the piece of thermal insulation	*22*[a]
Wood of the test framework	*60*
*Surface of the **flexible sheet** **heating element** and additional electrical insulation*[b]	–

[a] *For **storage heating applications**, the temperature rise may be up to 4 K higher for a period not exceeding 3 h.*

[b] *No temperature rise limit is specified. However, the temperature has to be determined in order that other tests of the standard can be carried out.*

12 Void

13 Leakage current and electric strength at operating temperature

This clause of Part 1 is applicable except as follows.

13.1 *Addition:*

*The **heating units** are installed as specified in 11.2, the most unfavourable covering material with respect to its electrical insulation characteristics being used.*

~~NOTE 101~~ *The concrete ~~is to~~ shall be fully dry before the test.*

13.2 *Addition:*

*The value specified for **class 0 appliances** applies to **heating units** having **basic insulation** only.*

*The value specified for **class II appliances** applies to **heating units** intended to be installed on a conductive surface and those covered by concrete or similar material.*

AVA Documents
Document Sharing Hub

Full document details: IEC 60335-2-96 2019 RLV

~~NOTE 101~~ *If the **heating unit** is intended to be installed on a conductive surface or covered by concrete or similar material, any additional electrical insulation specified in the instructions is placed in position.*

Grids and screens of insulated heating wires are disconnected from earth.

*The metal foil is placed on **accessible surfaces**. It is connected to the metal support of the test arrangement when testing **modular heating units**. The metal foil is not brought into contact with the terminations of grids or screens of insulated heating wires.*

13.3 *Modification:*

*The test is carried out directly on a **heating unit** and additional electrical insulation. The test voltage is applied after they have been conditioned for a period of 1 h at the temperature determined during the test of Clause 11.*

14 Transient overvoltages

This clause of Part 1 is applicable.

15 Moisture resistance

This clause of Part 1 is applicable except as follows.

15.1 *Addition:*

*The test is carried out directly on a **heating unit**.*

15.1.1 *Addition:*

*IPX7 **heating units** are immersed for 72 h.*

15.1.2 *Replacement:*

***Heating units**, other than IPX7 **heating units**, are placed horizontally on a perforated support in accordance with IEC 60529, taking into account the marking of orientation. If the orientation is not marked, they are tested in both positions.*

15.3 *Modification:*

*The test is carried out directly on a **heating unit** and additional electrical insulation.*

16 Leakage current and electric strength

This clause of Part 1 is applicable except as follows.

16.1 *Modification:*

*The tests are carried out directly on a **heating unit** and additional electrical insulation.*

16.2 *Addition:*

Documents
Document Sharing Hub

Full document details: IEC 60335-2-96 2019 RLV

*The value specified for **class 0 appliances** applies to **heating units** with **basic insulation** only.*

*The value specified for **class II appliances** applies to **heating units** intended to be installed on a conductive surface or covered by concrete or similar material.*

~~NOTE 101~~ *If the **heating unit** is intended to be installed on a conductive surface or covered by concrete or similar material, any electrical insulation specified in the instructions is placed in position.*

16.3 *Addition:*

*The values specified for **class 0 appliances** apply to **heating units** with **basic insulation** only.*

*The values specified for **class II appliances** apply to **heating units** intended to be installed on a conductive surface or covered by concrete or similar material.*

~~NOTE 101~~ *If the **heating unit** is intended to be installed on a conductive surface or covered by concrete or similar material, any electrical insulation specified in the instructions is placed in position.*

*For **heating units** with **basic insulation** only, other than those supplied at **safety extra-low voltage**, that are provided with additional electrical insulation for application in floors of concrete or similar material, each insulation shall withstand the test voltage specified for **reinforced insulation**.*

*For **heating units** with **basic insulation** only, other than those supplied at **safety extra-low voltage**, that are provided with additional electrical insulation for application in metallic ceilings, this additional insulation shall withstand the test voltage specified for **supplementary insulation**.*

*For **heating units** with **basic insulation** only, other than those supplied through an isolating transformer, that are provided with additional electrical insulation for application in timber floors, this additional insulation shall withstand the test voltage specified for **supplementary insulation**.*

17 Overload protection of transformers and associated circuits

This clause of Part 1 is applicable.

18 Endurance

This clause of Part 1 is applicable except as follows.

18.101 The connections from the **flexible sheet heating element** to the **supply leads** and to interconnection leads shall be reliable.

Compliance is checked by the following test.

*The **heating unit** is placed in a heating cabinet at a temperature of 20 °C ± 2 °C and is supplied with a voltage so that the current is equal to the value marked on the **flexible sheet heating element** or to the **rated current**, as applicable. The voltage drop at each connection is measured.*

Documents
Document Sharing Hub
Full document details: IEC 60335-2-96 2019 RLV

~~NOTE 1~~ *The length of the **heating unit** ~~is to~~ shall be as short as possible but not less than 0,5 m.*

~~NOTE 2~~ *The **heating unit** is not moved after it has been placed in the cabinet.*

~~NOTE 3~~ *If the connections are made by using crimp connectors, the voltage drop measurement is carried out between the **supply lead** and the connector as well as between the connector and the **flexible sheet heating element**. The measuring points are as close as possible to the connections.*

*The **heating unit** is heated in cycles. Each cycle has a duration of 1 h and comprises*

- *a period of 30 min, during which*
  - *the **heating unit** is supplied with the voltage that was applied when the voltage drop was measured;*
  - *for the first 20 min, the temperature of the heating cabinet is raised to 85 °C or to the temperature of the **flexible sheet heating element** determined during the test of Clause 11, whichever is lower;*
  - *for the last 10 min, the temperature of the heating cabinet is maintained within ±5 K of this temperature.*
- *a period of 20 min, during which the temperature is lowered to approximately 30 °C;*
- *a stabilization period of 10 min.*

~~NOTE 4~~ *The temperature in the heating cabinet is measured at a distance of at least 50 mm from the **heating unit**.*

~~NOTE 5~~ *Forced cooling may be used.*

The test is carried out for 400 cycles. The temperature of the heating cabinet is then reduced to 20 °C ± 2 °C and the voltage drop at each connection is measured again.

The voltage drop shall not exceed 22,5 mV or 1,5 times the first value measured, whichever is lower.

After the test, inspection shall show no damage to the extent that compliance with this standard is impaired.

18.102 The electrical connections between the resistance material and **electrodes** of **flexible sheet heating elements** shall be reliable.

*Compliance is checked by tests that are carried out on two **heating units**, each having a length exceeding 1 m.*

*One **heating unit** is subjected to the test of 18.102.2 after which it is subjected to the test of 18.102.5. The other **heating unit** is subjected to the tests of 18.102.1 to 18.102.5.*

*After the tests, the voltage drop of the second **heating unit**, determined at the location where bending is applied during the tests of 18.102.2, shall not exceed 1,5 times the voltage drop that was determined on the first **heating unit**. In addition, the average voltage drop determined at the other locations of the second **heating unit**, shall not exceed 1,5 times the average voltage drop of the first **heating unit**.*

*Inspection shall show no contact degradation such as pitting under the **electrodes** or damage adjacent to the **electrodes**.*

Documents
Document Sharing Hub
Full document details: IEC 60335-2-96 2019 RLV

18.102.1 *The **heating unit** is wound on a cylindrical mandrel having a diameter equal to twice the minimum radius for bending the **flexible sheet heating element** specified in the instructions and then unwound. This is repeated with the other face of the **flexible sheet heating element** against the mandrel.*

The test is carried out three times.

*If the instructions state that the **heating unit** is only to be wound in one direction, the test is carried out six times in this direction.*

18.102.2 *Part of the **heating unit** is held between two boards 100 mm thick and of sufficient size to fully cover the width of the **flexible sheet heating element**. One pair of edges of the boards is rounded with a radius of 50 mm.*

*The assembly is placed in an ambient temperature of –5 °C or the lowest ambient temperature specified for installation, whichever is lower. When the **flexible sheet heating element** has reached this temperature, its free end is bent over the rounded edges of the boards. It is bent through an angle of 180° and back to its normal position, in both directions. This bending operation is carried out three times.*

18.102.3 *The **heating unit** is placed in a humidity cabinet having a relative humidity of 80 % ± 5 % and a temperature of 40 °C ± 2 °C. It is supplied at **rated voltage** and operated for 1 h after which the supply is switched off for 1 h.*

The test is carried out for 1 000 cycles.

18.102.4 *The **heating unit** is subjected to the test of 18.101 which is carried out for 2 000 cycles. However, the voltage drop and inspection for damage is not determined.*

18.102.5 *The **heating unit** is placed on a horizontal surface and supplied at **rated voltage**. A needle is inserted into the resistance material of the **flexible sheet heating element** at an angle of 45 ° and at a distance of 5 mm from the inside edge of the **electrode**.*

~~NOTE 1~~ *Any conductive material between the **electrode** and the resistance material is considered to be part of the **electrode**.*

~~NOTE 2~~ *A jig such as that shown in Figure 106 may be used to locate the needle.*

*The voltage (U_m) between the needle and the supply connection to the **electrode** is measured.*

~~NOTE 3~~ *Compensation for the voltage drop in the **electrode** itself is allowed.*

The voltage drop (ΔU) at the contact is determined from the following formula:

$$\Delta U = U_{\mathrm{m}} \frac{5U_{\mathrm{r}}}{d}$$

where

U_{m} *is the voltage measured between the needle and the supply connection to the **electrode**;*

U_{r} *is the **rated voltage** of the **heating unit**;*

d *is the distance, in millimetres, between the inside edges of the **electrodes**. If the conductive path is not perpendicular to the **electrodes**, the distance is measured along the centreline of the path.*

Documents
Document Sharing Hub
Full document details: IEC 60335-2-96 2019 RLV

The voltage drop is determined at the location where bending is applied during the test of 18.102.2. It is also determined at not less than six other locations and the average value is calculated.

~~NOTE 4~~ *The location of the test points may be selected with the aid of thermal imaging equipment.*

18.103 The resistance of the **heating unit** shall not decrease significantly during use.

Compliance is checked by the following test.

*The **heating unit** is placed in a heating cabinet having a temperature 5 K higher than the temperature on the surface of the **flexible sheet heating element** determined during the test of Clause 11.*

*After a period of 2 h, the resistance of the **heating unit** is measured. The resistance is measured again at intervals not exceeding 72 h. The **heating unit** is left in the heating cabinet for 3 000 h. During the test, the resistance of the **heating unit** shall not decrease by more than 5 % below the value measured after the initial period of 2 h.*

19 Abnormal operation

This clause of Part 1 is applicable except as follows.

~~**19.1** *Addition:*~~

~~***Heating units** intended to be connected in series in timber floors or ceilings are also subjected to the test of 19.101.*~~

19.2 *Addition:*

*For ceiling applications, a piece of thermal insulation having a thermal resistance of approximately 0,9 m^2K/W is held against the ceiling covering material and located centrally across the **heating units**. It has a length of 0,8 m and a width equal to that of the **heating unit**.*

*For wall applications, a piece of thermal insulation having a thermal resistance of approximately 1,45 m^2K/W is held against the wall covering material and located centrally across the **heating units**. It has a length of 0,8 m and a width equal to that of the **heating unit**.*

*For wall applications, if the **heating unit** is intended to be installed on both sides of a wall, a piece of thermal insulation having a resistance of approximately 1,45 m^2K/W is held against the wall on both sides and located centrally across the **heating units**. It has a length of 0,8 m and a width equal to that of the **heating unit**.*

For floor applications, the thermal resistance of the piece of thermal insulation placed on the floor is increased to approximately 1,45 m^2K/W and is placed in the most unfavourable position.

*For **storage heating applications**, the **heating units** are charged for the **rated charging period**.*

19.13 *Addition:*

The temperature rise of the floor and the wood of the test framework shall not exceed 150 K.

Documents
Document Sharing Hub
Full document details: IEC 60335-2-96 2019 RLV

~~**19.101** ***Heating units*** *are installed as specified in Clause 11. The* ***heating unit*** *under test is supplied with 1,1 times the nominal voltage with which the installation is supplied.*~~

20 Stability and mechanical hazards

This clause of Part 1 is not applicable.

21 Mechanical strength

This clause of Part 1 is applicable except as follows.

21.1 *Addition:*

The blows are only applied to rigid parts of the ***heating unit****.*

~~NOTE 101 Normal use includes transportation and installation.~~

Heating units *are subjected to the tests of 21.101.*

Heating units *intended to be installed in floors are also subjected to the test of 21.102.*

Heating units *incorporating insulated wires intended to be installed in floors are also subjected to the test of 21.103.*

The additional layer of material covering ***heating units*** *in floors of concrete or similar material, or under tiles, is subjected to the test of 21.104.*

These tests are not applicable to ***modular heating units****.*

21.101 *Part of the* ***flexible sheet heating element*** *is held between two boards 100 mm thick and of sufficient size to fully cover the width of the* ***flexible sheet heating element****. One pair of edges of the boards is rounded with a radius of 50 mm.*

The assembly is placed in an ambient temperature of –5 °C or the lowest ambient temperature specified for installation, whichever is lower. When the ***flexible sheet heating element*** *has reached this temperature, its free end is bent over the rounded edges of the boards. It is bent through an angle of 180 ° and back to its normal position, in both directions. This bending operation is carried out three times.*

The ***heating unit*** *shall then withstand the electric strength test of 16.3 and shall not be damaged to such an extent that compliance with this standard is impaired.*

21.102 *This test is carried out on two* ***heating units****. The* ***heating unit*** *is placed on a horizontal steel plate having a smooth surface and the surface of the* ***flexible sheet heating element*** *is scratched by means of a hardened steel pin, the end of which has the form of a cone with an angle of 40°. Its tip is rounded with a radius of 0,25 mm ± 0,02 mm. The pin is loaded so that the force exerted along its axis is 10 N ± 0,5 N for applications in concrete and similar floors and 5 N ± 0,5 N for applications in other floors. The scratches are made by drawing the pin along the surface at a speed of approximately 20 mm/s. The pin is held at an angle of 5° to 10° from the vertical in the direction of movement.*

Three scratches, at least 50 mm apart, are made on both sides of one ***flexible sheet heating element****. They are made parallel with the length of the* ***heating unit*** *and at least 10 mm from one of the edges. The length of the scratches is approximately equal to the width of the* ***heating unit****. If the* ***flexible sheet heating element*** *incorporates* ***electrodes****, one of the scratches is made along one of the* ***electrodes****.*

AVA Documents
Document Sharing Hub

*Two similar scratches are made across the full width on both sides of the other **flexible sheet heating element**.*

*The **heating unit** shall then withstand the electric strength test of 16.3.*

21.103 *The part of the **heating unit** containing an insulated heating wire is placed on a rigid steel plate. A steel rod, 6 mm in diameter, is placed across the heating wire so that it is only in contact in one location.*

A force is applied to the rod for 30 s and has a value of

- *600 N, for **heating units** for applications in floors of concrete;*
- *300 N, for **heating units** for other floor applications.*

The force is applied to five different locations at least 50 mm apart.

*The **heating unit** shall then withstand the electric strength test of 16.3. If the insulated heating wire contains more than one conductor, the test for **basic insulation** is also carried out between the conductors.*

*If the **heating unit** contains screened insulated wires covered by a sheath, the test for **basic insulation** is also carried out between the conductors and the screen.*

There shall be no penetration of the sheath.

21.104 *A sample of the additional layer of material is placed on a horizontal steel plate having a smooth surface and is scratched by means of a hardened steel pin, the end of which has the form of a cone with an angle of 40°. Its tip is rounded with a radius of 0,25 mm ± 0,02 mm. The pin is loaded so that the force exerted along its axis is 10 N ± 0,5 N for applications in concrete and similar floors and 5 N ± 0,5 N for other applications. The pin is held at an angle of 80° to 85° to the horizontal and scratches are made by drawing the pin along the surface at a speed of approximately 20 mm/s.*

*Three scratches are made at least 50 mm apart. Scratches shall be at least 10 mm from one of the edges. The length of the scratches is approximately equal to the width of the **heating unit**.*

Similar scratches are made on the second sample, but at right angles to the direction of the scratches on the first sample.

There shall be no penetration of the material.

22 Construction

This clause of Part 1 is applicable except as follows.

~~*Addition:*~~

22.101 The means of connection to the supply shall be securely fixed to the **flexible sheet heating element**.

*Compliance is checked by the following test which is carried out on two **heating units**.*

*The **heating unit** is laid flat on a horizontal surface and held in position so that approximately 100 mm length of **flexible sheet heating element** together with the **supply leads** hang over the edge of the surface. The free length of the **supply leads** is approximately 300 mm.*

AVA Documents
Document Sharing Hub
Full document details: IEC 60335-2-96 2019 RLV

*A force of 60 N is applied without jerks to each **supply lead** for 1 min. The test is repeated after a rest period of 1 min.*

*There shall be no damage to the lead, connection or **flexible sheet heating element** impairing compliance with this standard. The **heating unit** shall withstand the electric strength test of 16.3.*

22.102 The insulation covering the connections and the edges of the **flexible sheet heating element** shall not affect the material of the **flexible sheet heating element**.

Compliance is checked by the following test.

*The **heating unit** is placed in a cabinet at a temperature of 80 °C or 45 °C plus the temperature rise determined during the test of Clause 11, whichever is higher. The test is carried out for 336 h.*

*After the **heating unit** has cooled down to approximately room temperature, it shall withstand the electric strength test of 16.3.*

22.103 The sheets of electrical insulation of laminated **flexible sheet heating elements** shall be reliably bonded together. However, if the **heating units** are for application in a floor of concrete or similar material, only the edges of the **flexible sheet heating element** have to be bonded.

Compliance is checked by the following test.

*Two sets of three samples having dimensions approximately 15 mm × 150 mm are cut from a new **flexible sheet heating element**. The samples for each set are taken from the edge and from the heating surface both perpendicular and parallel to an edge. For applications in floors of concrete or similar material, the set consists of one sample that is cut from the edges.*

*One set is placed for 336 h in a heating cabinet corresponding to the temperature of the **flexible sheet heating element** determined during the test of Clause 11.*

The layers of insulation are then separated at one end of each of the samples and attached to the clamps of a tensile machine in turn.

~~NOTE~~ *If it is not possible to separate the layers, specially prepared samples may be used.*

The clamps are separated at a rate of 250 mm/min ± 50 mm/min.

The bond strength of each sample shall be at least 1,5 N.

The average bond strength of the conditioned samples shall be not less than 80 % of the average bond strength of the unconditioned samples.

22.104 Connecting devices fitted to **supply leads** and interconnection leads shall be of **class II construction**. It shall not be possible to separate them without the aid of a **tool**.

Compliance is checked by inspection.

22.105 **Heating units** of **class II construction** intended to be installed under floors in damp locations shall not subject the user to excessive capacitive currents.

Heating units having **basic insulation** only, but covered with additional electrical insulation, are considered to be **class II construction**.

AVA Documents
Document Sharing Hub

Full document details: IEC 60335-2-96 2019 RLV

*Compliance is checked by the following test. However, the test is not carried out if the instructions for installation specify that an air gap is required between the **heating unit** and the floor.*

*The grid is connected to earth and to a metal foil having an area approximately 200 mm × 100 mm through the measurement instrument shown in Figure 109. The surface of the floor directly above a **heating unit** is covered with 0,25 l of water containing approximately 1 % NaCl and left for 2 h. The metal foil is placed on the wet surface and the **heating units** are supplied at 1,06 times **rated voltage**.*

22.106 **Heating units** other than **class III heating units** for wall installations below a height of 1,2 m, shall be fitted with an earthed conductive screen which is laminated with electrical insulation or shall be provided by the manufacturer of the **heating unit** with a separate earthed conductive screen which is laminated with electrical insulation.

The conductive screen shall incorporate a terminal or wire that enables the screen to be connected to the protective conductor of the electrical installation.

The conductive screen shall fully cover the current carrying parts of the **flexible sheet heating element**.

Heating units other than **class III heating units** for wall installations below a height of 1,2 m shall incorporate or be delivered with a protection circuit that disconnects both poles of the supply within one cycle of supply frequency when the **flexible sheet heating element** insulation is penetrated.

The protection circuit shall not automatically reset or automatically reconnect the supply when the penetrating object is removed.

Compliance is checked by inspection and by the test of 22.106.1. Electrically insulated tools shall be used when the voltage is applied to the sample.

22.106.1 *The appliance is supplied at **rated voltage**. An attempt is made with a steel pin with a diameter of 1 mm, to touch the **flexible sheet heating element** in three locations. A suitable supporting surface which allows pin to penetrate through the surface shall be used in order to ensure that the current carrying part of the **flexible sheet heating element** can be touched with the pin.*

*If contact with the current carrying part of the **flexible sheet heating element** is made, a protection circuit shall operate to give all pole disconnection of the **flexible sheet heating element** within one cycle of the supply frequency.*

*When the test pin is removed from the contact with the current carrying part of the **flexible sheet heating element**, a manual operation shall be required to reenergize the **flexible sheet heating element**.*

If the protection circuit does not rely on a connection to the supply system protective earth to cause its operation,

- *the voltage on the test pin prior and during detection shall not be greater than 24 V, and*
- *the maximum current through the test pin shall not exceed 5 mA, when measured to earth or any of the supply conductors.*

*If the protection system relies on contact with a conductive layer, such as metal braiding or metal foil, to cause its operation and if the conductive layer does not comply with the requirements for **accessible metal parts** of 27.5, then the conductive layer shall be insulated from **live parts** by **reinforced insulation** or **double insulation** and be covered by a sheath complying with the requirements for **basic insulation**.*

AVA Documents
Document Sharing Hub

Full document details: IEC 60335-2-96 2019 RLV

23 Internal wiring

This clause of Part 1 is applicable.

24 Components

This clause of Part 1 is applicable except as follows.

24.101 **Thermal cut-outs** that are necessary for compliance with Clause 19 shall be **non-self resetting** with a trip-free mechanism.

Compliance is checked by inspection.

24.102 Controls and other components necessary for the **heating unit** to comply with this standard shall be supplied with the **flexible sheet heating element** or sufficiently specified in the instructions for installation so they can be obtained separately.

Controls and other components necessary for the **heating unit** to comply with 22.106 of this standard shall be supplied with the **flexible sheet heating element**.

Compliance is checked by inspection.

25 Supply connection and external flexible cords

This clause of Part 1 is applicable except as follows.

25.3 *Replacement:*

Heating units, other than those that can be cut on site, shall incorporate one of the following means for permanent connection to fixed wiring:

– a set of terminals, or
– a set of **supply leads**, or
– a **supply cord**.

Heating units that can be cut on site shall be supplied with a suitable means for connection to the supply mains. **Supply leads** shall be double insulated or fitted with insulating sleeves. The sleeves shall be at least 300 mm long and have a thickness corresponding to that of a sheath of a **supply cord** (code designation 60245 IEC 53).

Compliance is checked by inspection.

25.5 *Modification:*

Type Z attachment is allowed.

26 Terminals for external conductors

This clause of Part 1 is applicable except as follows.

26.1 *Addition:*

Heating units shall not incorporate screw-type terminals.

Documents
Document Sharing Hub

Full document details: IEC 60335-2-96 2019 RLV

26.5 *Modification:*

This requirement applies to all terminals to which connections are made during installation.

26.11 *Addition:*

This requirement also applies to **heating units** fitted with **supply leads**.

27 Provision for earthing

This clause of Part 1 is applicable except as follows.

27.1 *Addition:*

Components provided for the reduction of capacitive currents, and which are earthed, are not considered to provide provision for earthing.

28 Screws and connections

This clause of Part 1 is applicable.

29 Clearances, creepage distances and solid insulation

This clause of Part 1 is applicable except as follows.

29.1 *Modification:*

Modular heating units are in overvoltage category II. Other **heating units** are in overvoltage category III.

29.3 *Modification:*

There are no dimensional requirements for the insulation of ~~flexible sheet~~ **heating** ~~elements~~ **units** or additional electrical insulation.

29.3.2 *Addition:*

*For **class II heating units**, there shall be two layers of insulation on the **flexible sheet heating element** and each of these layers shall withstand the electric strength test of 16.3 for **reinforced insulation**. However, if the layers are inseparable, the combination shall withstand the electric strength test of 16.3 for **reinforced insulation**.*

30 Resistance to heat and fire

This clause of Part 1 is applicable except as follows.

30.1 *Addition:*

*The test is not applicable to **flexible sheet heating elements**.*

The tests of 25.1 and 25.4 of IEC 60884-1 are applicable to the flexible parts of connecting devices.

Documents
Document Sharing Hub

Full document details: IEC 60335-2-96 2019 RLV

30.2 *Modification:*

The requirement is not applicable to **heating units** intended for applications in ~~floors of~~ concrete or similar material.

~~**30.2.1** *Modification:*~~

~~*Only the burning test of ISO 9772 is applicable to* **flexible sheet heating elements**. *The glow wire test of IEC 60695-2-11 is applicable to other components, the temperature being increased to 650 °C.*~~

30.2.3.1 *Modification:*

This subclause is not applicable~~, irrespective of the value of the current~~ to **flexible sheet heating elements**.

~~**30.2.3.2** *Modification:*~~

~~*The test is carried out at the higher temperature irrespective of the value of the current.*~~

31 Resistance to rusting

This clause of Part 1 is applicable.

32 Radiation, toxicity and similar hazards

This clause of Part 1 is applicable.

Documents
Document Sharing Hub

Full document details: IEC 60335-2-96 2019 RLV

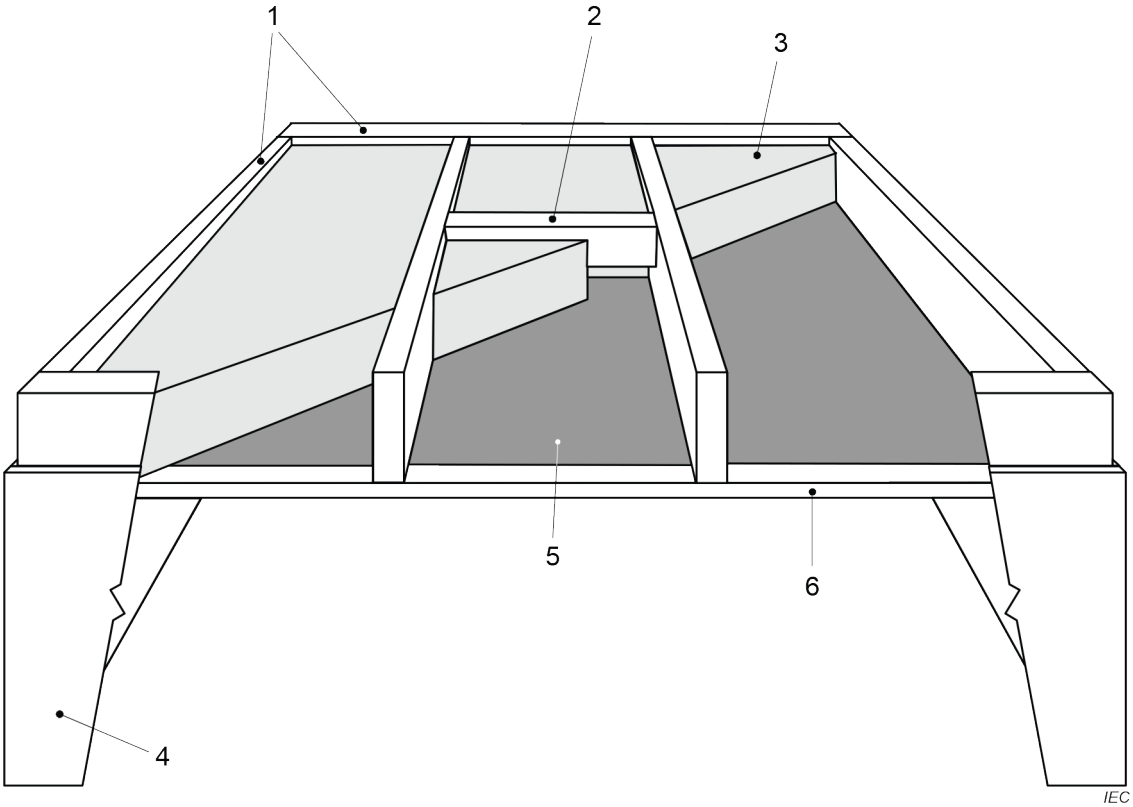

Key

1 50 mm × 200 mm timber frame

2 cross member

3 thermal insulation

4 wooden board

5 heating unit

6 covering material

Figure 101 – Arrangement for testing heating units in timber ceilings

Documents
Document Sharing Hub
Full document details: IEC 60335-2-96 2019 RLV

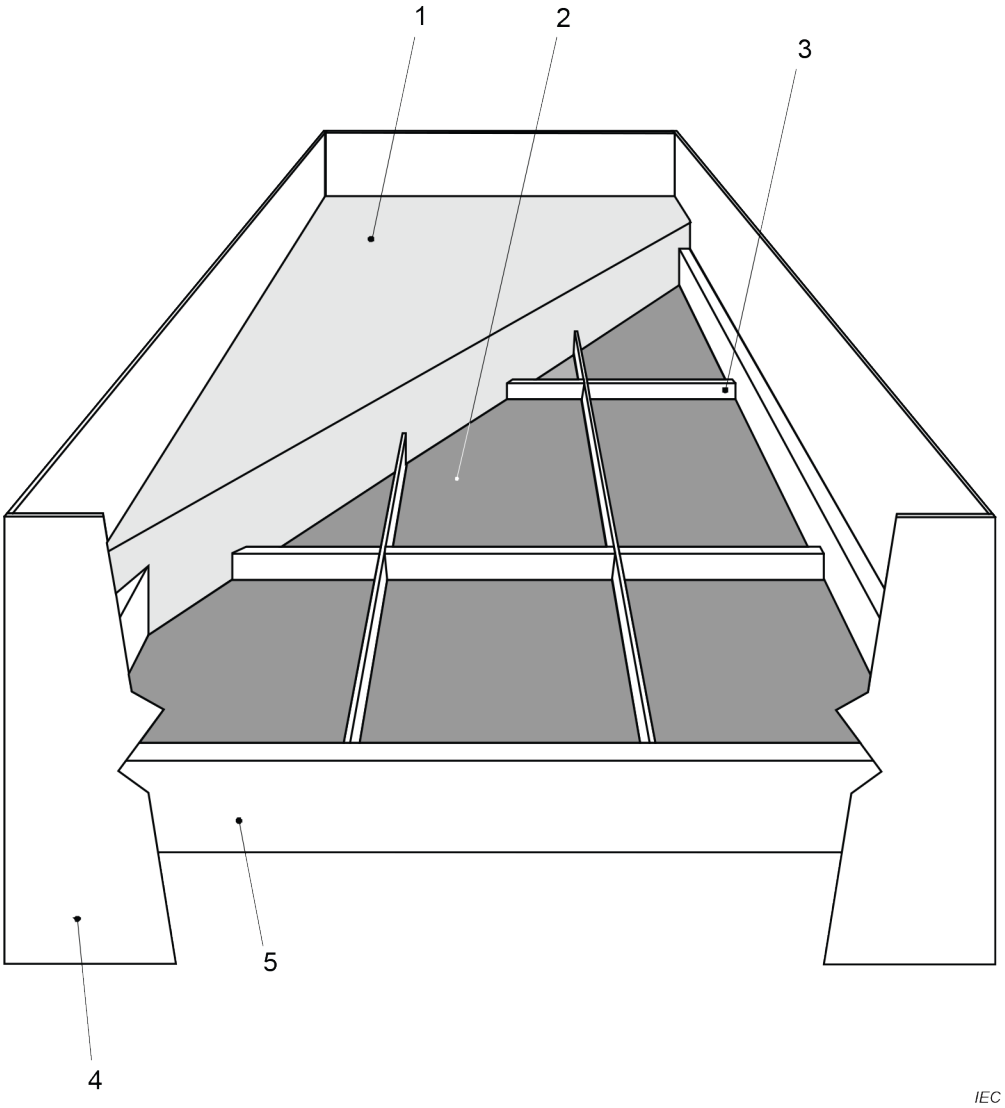

Key

1 thermal insulation

2 modular heating unit

3 support frame

4 wooden board

5 50 mm × 200 mm timber frame

Figure 102 – Arrangement for testing modular heating units

Documents
Document Sharing Hub

Full document details: IEC 60335-2-96 2019 RLV

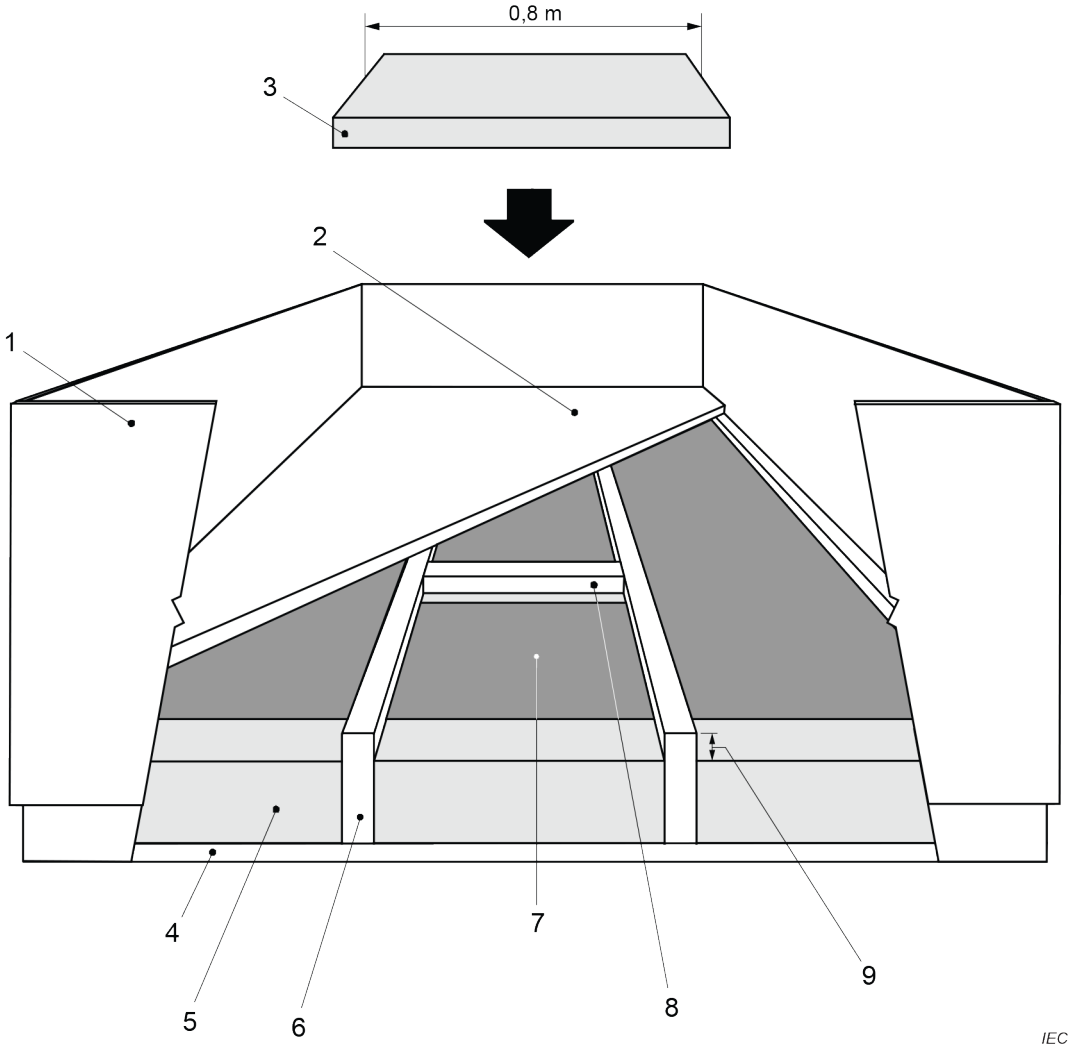

Key

1 wooden board
2 floor
3 piece of insulation
4 support for thermal insulation
5 thermal insulation
6 50 mm × 200 mm timber frame
7 heating unit
8 cross member
9 air gap

Figure 103 – Arrangement for testing heating units in timber floors

Documents
Document Sharing Hub
Full document details: IEC 60335-2-96 2019 RLV

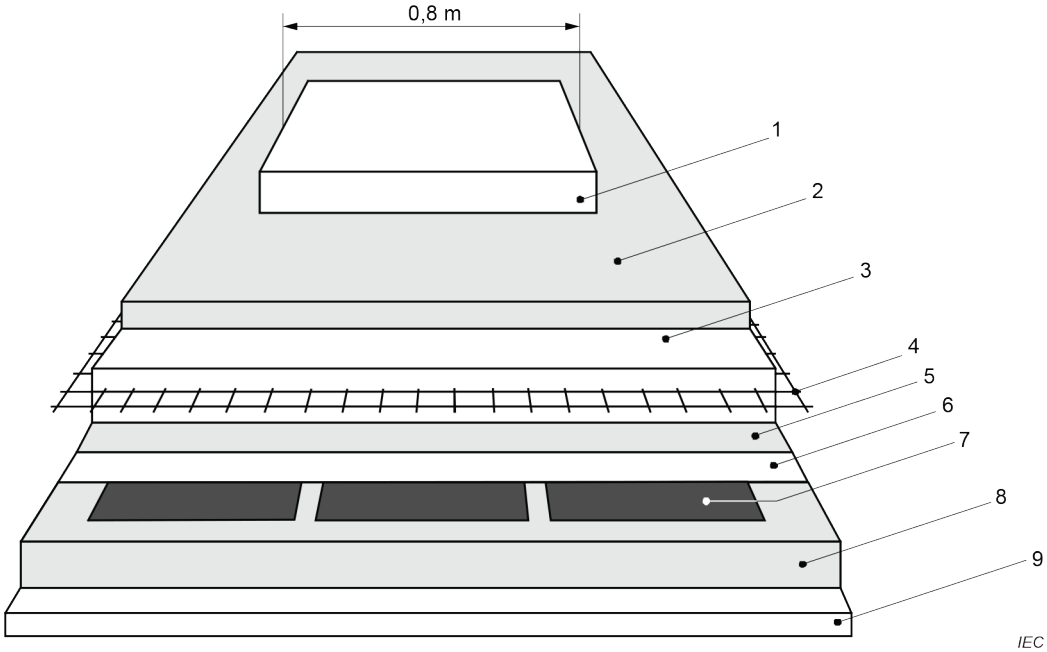

Key

1 piece of insulation
2 flooring
3 concrete
4 grid (if specified)
5 ~~Polyethylene film~~ additional layer (if ~~required~~ specified)
6 additional electrical insulation (if specified)
7 heating unit
8 thermal insulation
9 plywood

Figure 104 – Arrangement for testing heating units ~~in~~ below concrete ~~floors~~

Documents
Document Sharing Hub
Full document details: IEC 60335-2-96 2019 RLV

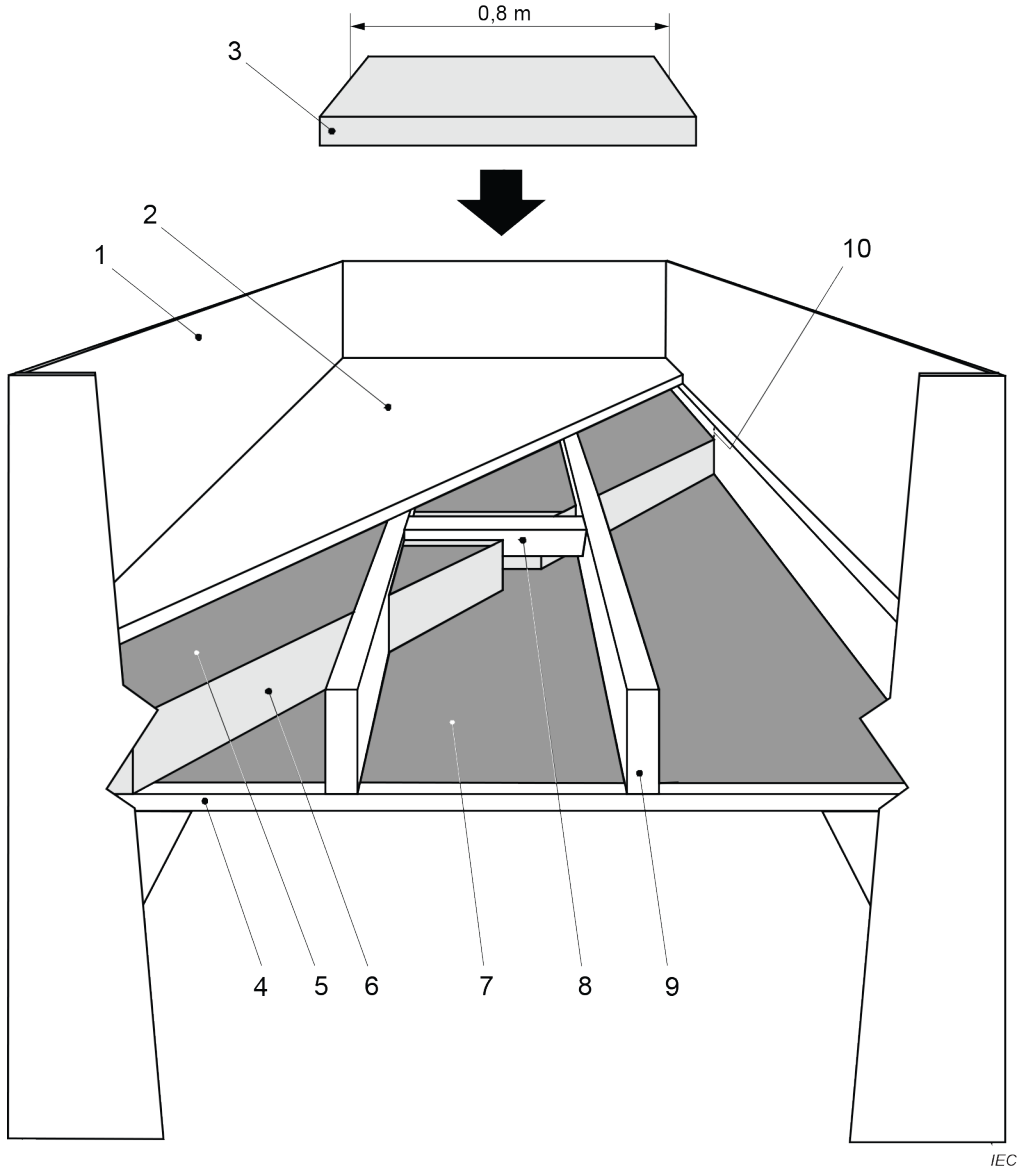

Key

1 wooden board
2 floor
3 piece of insulation
4 covering material
5 floor heating unit
6 thermal insulation
7 ceiling heating unit
8 cross member
9 50 mm × 200 mm timber frame
10 air gap

Figure 105 – Arrangement for testing heating units in timber floors and ceilings in combination

Documents
Document Sharing Hub
Full document details: IEC 60335-2-96 2019 RLV

Dimensions in millimetres

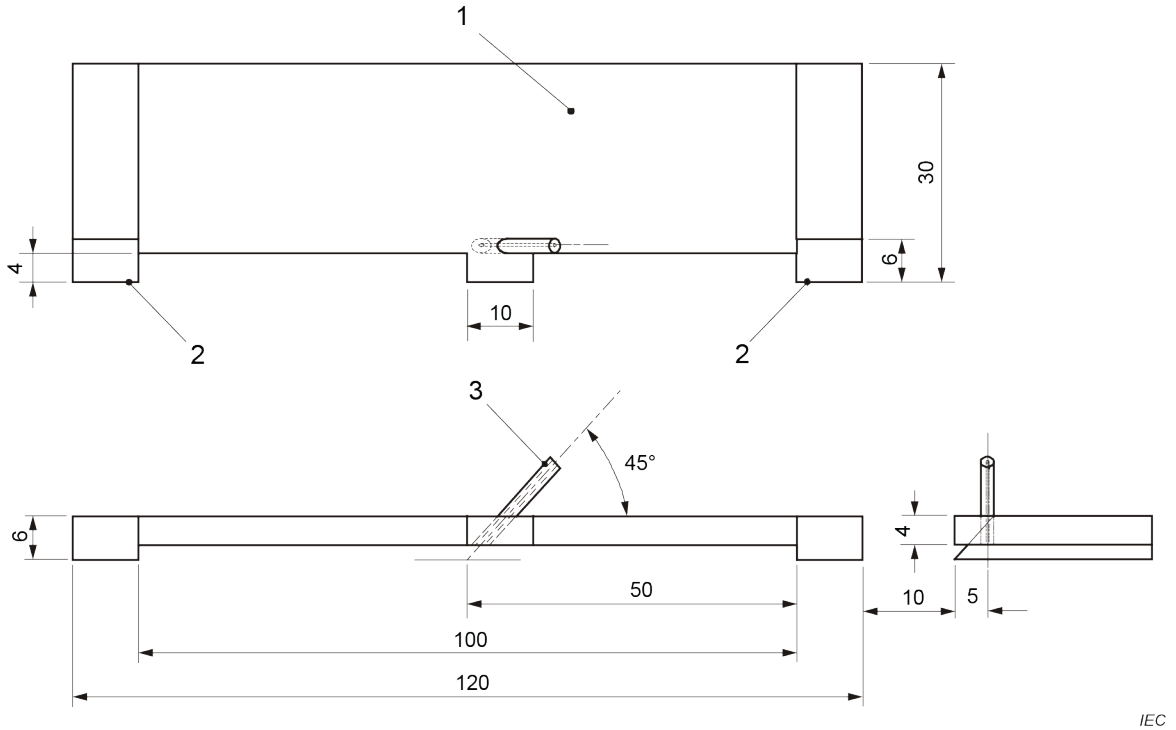

~~NOTE – Jig body is made from insulating material.~~

Key

1 jig body made from insulating material

2 reference edge

3 needle guide

Figure 106 – Jig for locating the contact needle

Documents
Document Sharing Hub
Full document details: IEC 60335-2-96 2019 RLV

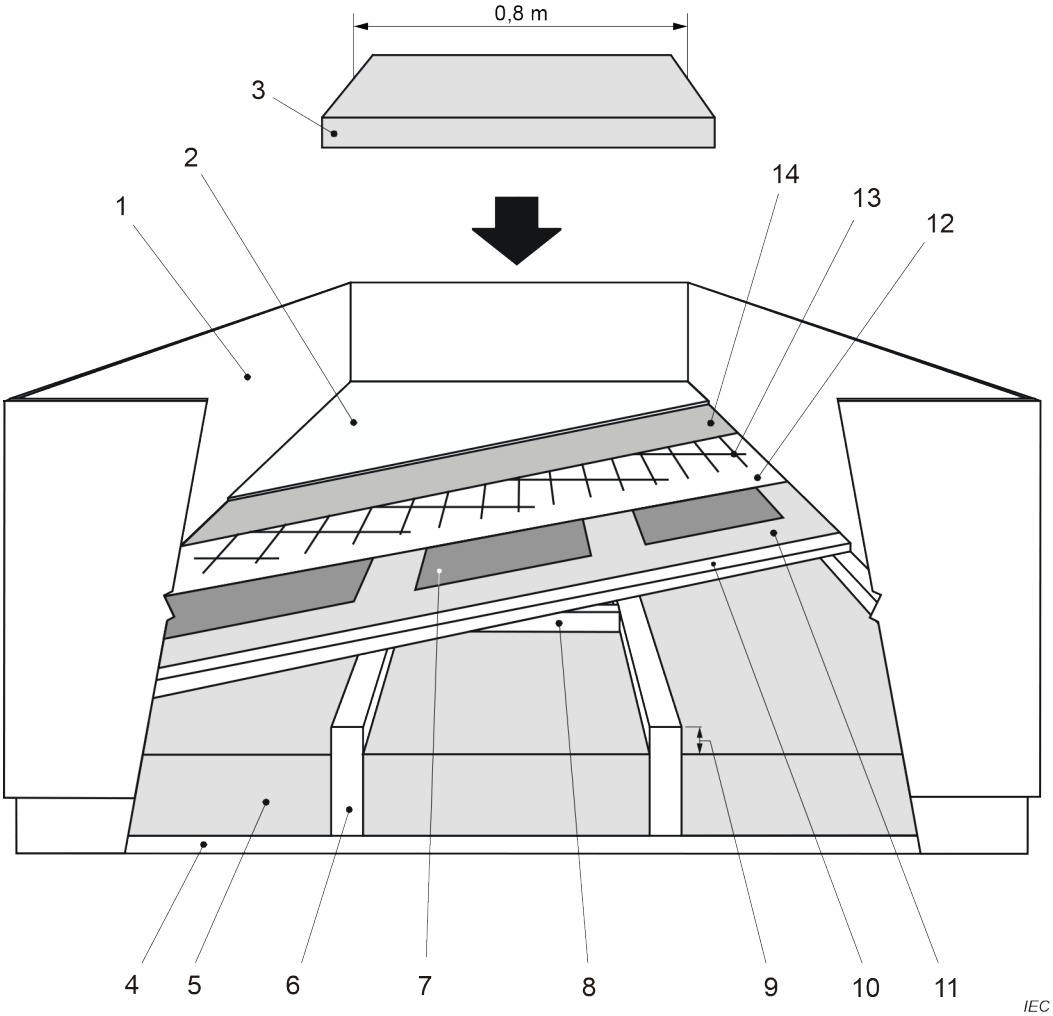

Key

1 wooden board
2 floor
3 piece of insulation
4 support for thermal insulation
5 thermal insulation
6 50 mm × 200 mm timber frame
7 heating unit
8 cross member
9 air gap (if specified)
10 plywood
11 additional material (if specified)
12 additional electrical insulation (if specified)
13 grid
14 additional layer (if specified)

Figure 107 – Arrangement for testing heating units above timber floors

Documents
Document Sharing Hub
Full document details: IEC 60335-2-96 2019 RLV

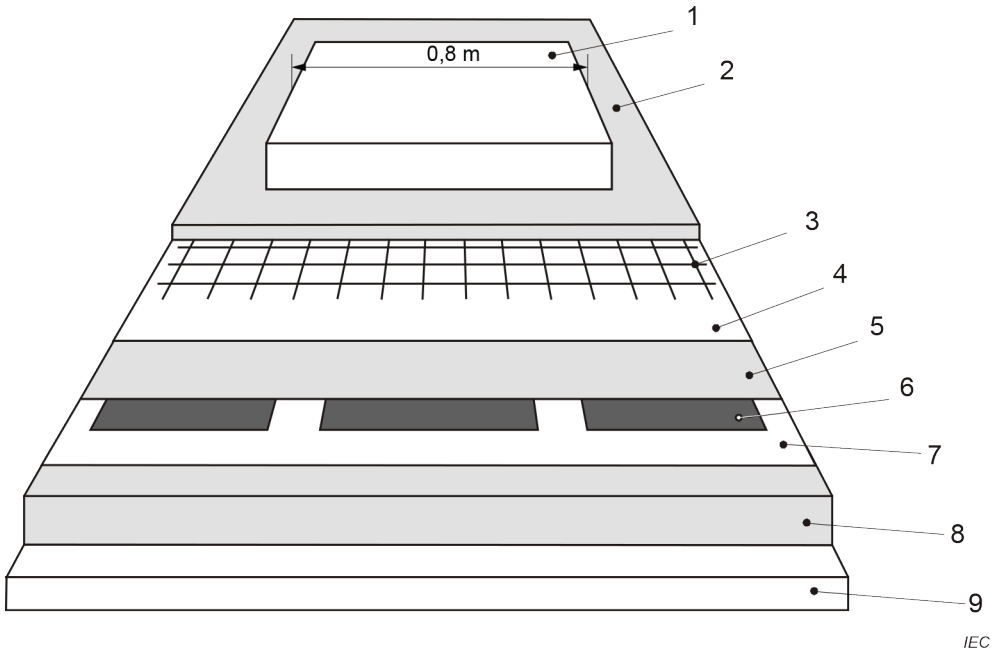

Key

1 piece of insulation
2 floor
3 grid
4 additional layer (if specified)
5 additional electrical insulation (if specified)
6 **heating unit**
7 additional layer (if specified)
8 thermal insulation
9 concrete base

Figure 108 – Arrangement for testing heating units above concrete floors

Documents
Document Sharing Hub
Full document details: IEC 60335-2-96 2019 RLV

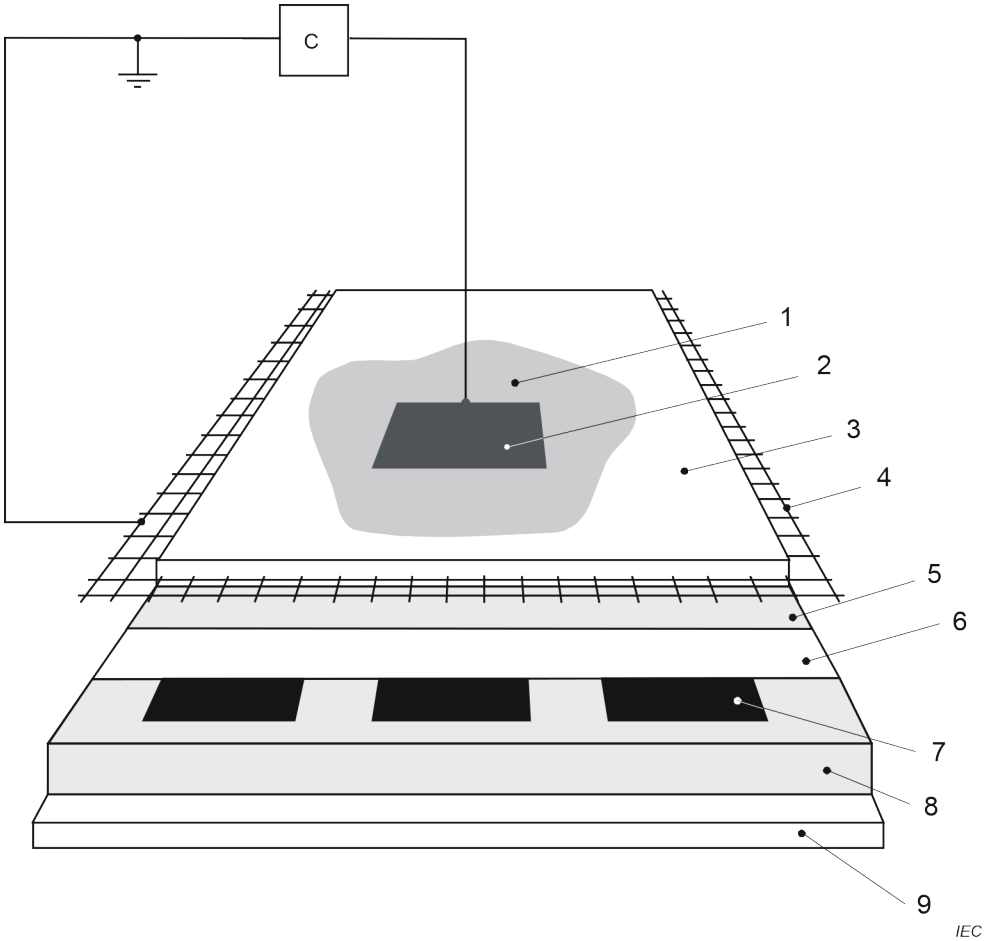

Key

C circuit of Figure 4 of IEC 60990

1 saline solution

2 metal foil

3 floor covering

4 grid

5 additional layer (if specified)

6 additional electrical insulation (if specified)

7 **heating unit**

8 thermal insulation

9 plywood base

Figure 109 – Arrangement for measuring capacitive currents

Documents
Document Sharing Hub
Full document details: IEC 60335-2-96 2019 RLV

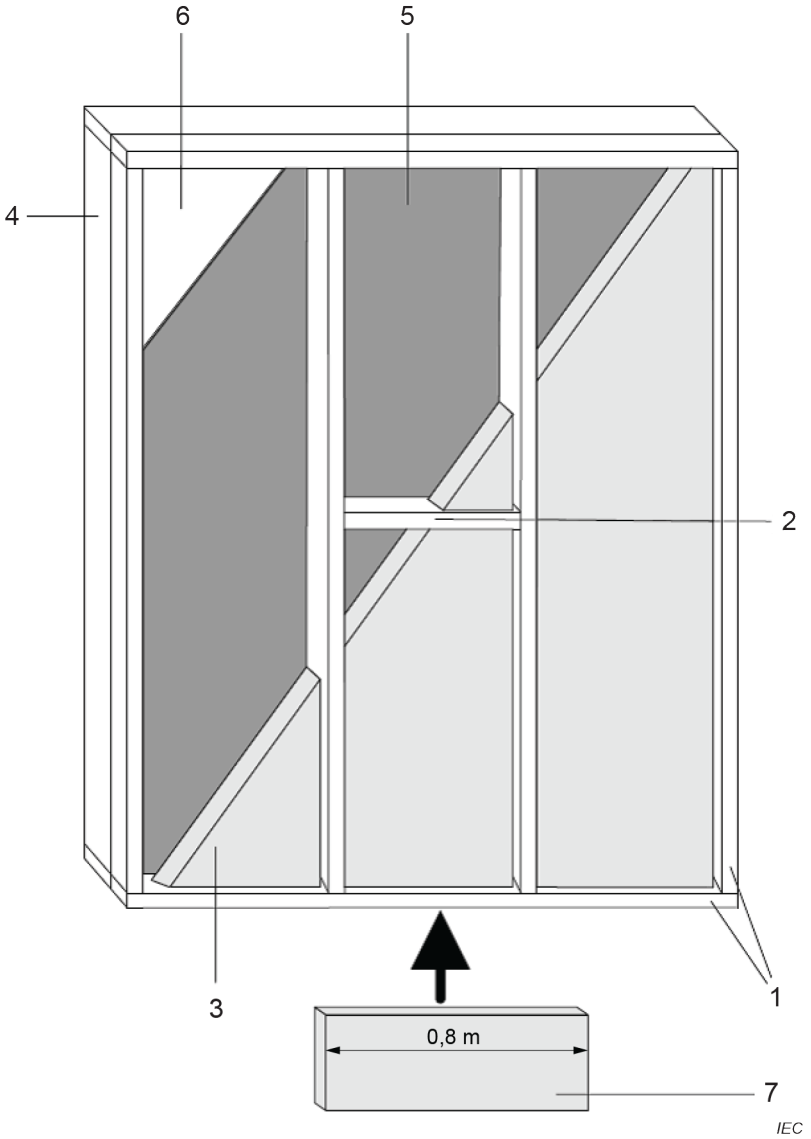

Key

1 50 mm × 200 mm timber frame

2 cross member

3 thermal insulation

4 wooden board extending approx. 0,2 m from the covering material

5 **heating unit**

6 covering material; add covering material even to the side of wall without the **flexible sheet heating element**. No air gap to be left between the covering material and the thermal insulation

7 piece of insulation to be inserted against the covering material

Figure 110 – Arrangement for testing heating units in timber walls

Documents
Document Sharing Hub
Full document details: IEC 60335-2-96 2019 RLV

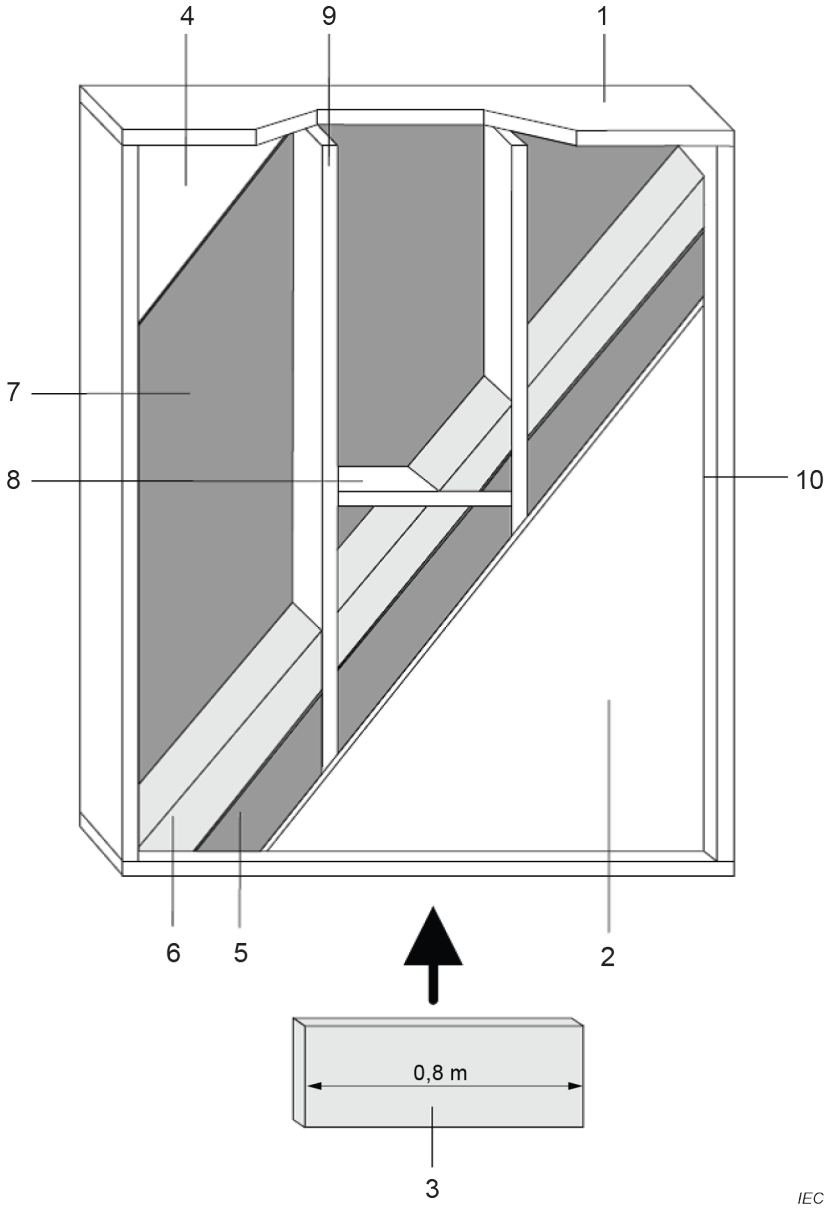

Key

1 wooden board extending approx. 0,2 m from the covering materials
2 wall covering material for **heating unit** 1
3 piece of insulation
4 wall covering material for **heating unit** 2
5 wall **heating unit** 1
6 thermal insulation
7 wall **heating unit** 2
8 cross member
9 50 mm × 200 mm timber frame
10 no air gaps for wall applications

Figure 111 – Arrangement for testing heating units in both sides of timber wall applications

Documents
Document Sharing Hub
Full document details: IEC 60335-2-96 2019 RLV

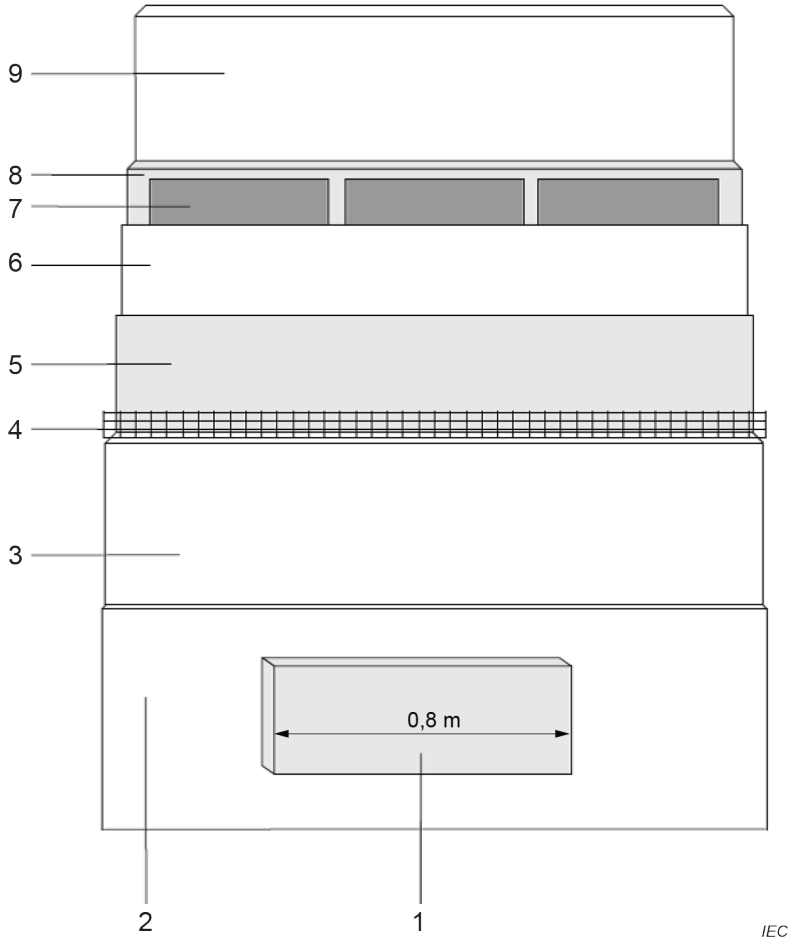

Key

1 piece of insulation
2 wall covering material
3 concrete or similar material
4 grid (if specified)
5 additional electrical insulation (if specified)
6 earthed conductive screen
7 **heating unit**
8 thermal insulation
9 plywood

Figure 112 – Arrangement for testing heating units intended to be installed in a wall of concrete or similar material

Documents
Document Sharing Hub
Full document details: IEC 60335-2-96 2019 RLV