IEC 60350-2

Edition 1.0 2011-12

INTERNATIONAL STANDARD

NORME INTERNATIONALE

Withdrawn

Household electric cooking appliances – Part 2: Hobs – Methods for measuring performance

Appareils de cuisson électrodomestiques – Partie 2: Tables de cuisson – Méthodes de mesure de l'aptitude à la fonction

IEC 60350-2:2011

Documents
Document Sharing Hub

Full document details: IEC 60350-2 2011

THIS PUBLICATION IS COPYRIGHT PROTECTED

Copyright © 2011 IEC, Geneva, Switzerland

All rights reserved. Unless otherwise specified, no part of this publication may be reproduced or utilized in any form or by any means, electronic or mechanical, including photocopying and microfilm, without permission in writing from either IEC or IEC's member National Committee in the country of the requester.
If you have any questions about IEC copyright or have an enquiry about obtaining additional rights to this publication, please contact the address below or your local IEC member National Committee for further information.

Droits de reproduction réservés. Sauf indication contraire, aucune partie de cette publication ne peut être reproduite ni utilisée sous quelque forme que ce soit et par aucun procédé, électronique ou mécanique, y compris la photocopie et les microfilms, sans l'accord écrit de la CEI ou du Comité national de la CEI du pays du demandeur.
Si vous avez des questions sur le copyright de la CEI ou si vous désirez obtenir des droits supplémentaires sur cette publication, utilisez les coordonnées ci-après ou contactez le Comité national de la CEI de votre pays de résidence.

IEC Central Office
3, rue de Varembé
CH-1211 Geneva 20
Switzerland
Email: inmail@iec.ch
Web: www.iec.ch

About the IEC

The International Electrotechnical Commission (IEC) is the leading global organization that prepares and publishes International Standards for all electrical, electronic and related technologies.

About IEC publications

The technical content of IEC publications is kept under constant review by the IEC. Please make sure that you have the latest edition, a corrigenda or an amendment might have been published.

- Catalogue of IEC publications: www.iec.ch/searchpub
The IEC on-line Catalogue enables you to search by a variety of criteria (reference number, text, technical committee,…). It also gives information on projects, withdrawn and replaced publications.
- IEC Just Published: www.iec.ch/online_news/justpub
Stay up to date on all new IEC publications. Just Published details twice a month all new publications released. Available on-line and also by email.
- Electropedia: www.electropedia.org
The world's leading online dictionary of electronic and electrical terms containing more than 20 000 terms and definitions in English and French, with equivalent terms in additional languages. Also known as the International Electrotechnical Vocabulary online.
- Customer Service Centre: www.iec.ch/webstore/custserv
If you wish to give us your feedback on this publication or need further assistance, please visit the Customer Service Centre FAQ or contact us:
Email: csc@iec.ch
Tel.: +41 22 919 02 11
Fax: +41 22 919 03 00

A propos de la CEI

La Commission Electrotechnique Internationale (CEI) est la première organisation mondiale qui élabore et publie des normes internationales pour tout ce qui a trait à l'électricité, à l'électronique et aux technologies apparentées.

A propos des publications CEI

Le contenu technique des publications de la CEI est constamment revu. Veuillez vous assurer que vous possédez l'édition la plus récente, un corrigendum ou amendement peut avoir été publié.

- Catalogue des publications de la CEI: www.iec.ch/searchpub/cur_fut-f.htm
Le Catalogue en-ligne de la CEI vous permet d'effectuer des recherches en utilisant différents critères (numéro de référence, texte, comité d'études,…). Il donne aussi des informations sur les projets et les publications retirées ou remplacées.
- Just Published CEI: www.iec.ch/online_news/justpub
Restez informé sur les nouvelles publications de la CEI. Just Published détaille deux fois par mois les nouvelles publications parues. Disponible en-ligne et aussi par email.
- Electropedia: www.electropedia.org
Le premier dictionnaire en ligne au monde de termes électroniques et électriques. Il contient plus de 20 000 termes et définitions en anglais et en français, ainsi que les termes équivalents dans les langues additionnelles. Egalement appelé Vocabulaire Electrotechnique International en ligne.
- Service Clients: www.iec.ch/webstore/custserv/custserv_entry-f.htm
Si vous désirez nous donner des commentaires sur cette publication ou si vous avez des questions, visitez le FAQ du Service clients ou contactez-nous:
Email: csc@iec.ch
Tél.: +41 22 919 02 11
Fax: +41 22 919 03 00

Withdrawn

Documents
Document Sharing Hub

Full document details: IEC 60350-2 2011

IEC 60350-2

Edition 1.0 2011-12

INTERNATIONAL STANDARD

NORME INTERNATIONALE

withdrawn

Household electric cooking appliances – Part 2: Hobs – Methods for measuring performance

Appareils de cuisson électrodomestiques – Partie 2: Tables de cuisson – Méthodes de mesure de l'aptitude à la fonction

INTERNATIONAL ELECTROTECHNICAL COMMISSION

COMMISSION ELECTROTECHNIQUE INTERNATIONALE

PRICE CODE
CODE PRIX S

ICS 97.040.20

ISBN 978-2-88912-843-3

® Registered trademark of the International Electrotechnical Commission
Marque déposée de la Commission Electrotechnique Internationale

Documents
Document Sharing Hub

Full document details: IEC 60350-2 2011

CONTENTS

FOREWORD 4
1 Scope 6
2 Normative references 6
3 Terms and definitions 6
4 List of measurements 7
4.1 Dimensions and mass 7
4.2 Hotplates and cooking zones 7
4.3 Cleaning 7
5 General conditions for the measurements 8
5.1 Test room 8
5.2 Electricity supply 8
5.3 Instrumentation 8
5.4 Positioning the appliance 8
5.5 Setting of controls 8
6 Dimensions and mass 8
6.1 Overall dimensions 8
6.2 Dimensions of hotplates and cooking zones 10
6.3 Level of hotplates 10
6.4 Distance between hotplates or cooking zones 11
6.5 Mass of the appliance 11
7 Hotplates and cooking zones 11
7.1 Ability to heat water 11
7.2 Ability to control the temperature of a load 13
7.2.1 Temperature control 13
7.2.2 Temperature overshoot 13
7.3 Heat distribution 14
7.3.1 General 14
7.3.2 Recipe for pancakes 14
7.3.3 Procedure 15
7.3.4 Assessment 15
7.4 Heat performance of hobs 15
7.4.1 Test purpose 15
7.4.2 Test procedure 15
7.5 Smallest detected diameter 17
7.5.1 Test purpose 17
7.5.2 Test procedure 17
8 Standby power 18
9 Spillage capacity of hobs 19
Annex A (normative) Shade chart 20
Annex B (informative) Addresses of suppliers 22
Bibliography 23

Figure 1 – Dimensions of appliances 9
Figure 2 – Dimensions of built-in hobs 10

Withdrawn

AVA Documents
Document Sharing Hub

Full document details: IEC 60350-2 2011

Figure 3 – Device for checking the level of hotplates 11
Figure 4 – Saucepan 12
Figure 5 – Frying pan 14
Figure 6 – Disc to determine the smallest detected diameter 18

Table 1 – Quantity of water in the saucepan 13
Table 2 – Ingredients and cooking durations 14
Table 3 – Quantities 16
Table 4 – Frying times 16
Table A.1 – Classification of shade numbers 20
Table A.2 – Examples for the shade charts 20

Withdrawn

Documents
Document Sharing Hub

Full document details: IEC 60350-2 2011

INTERNATIONAL ELECTROTECHNICAL COMMISSION

HOUSEHOLD ELECTRIC COOKING APPLIANCES –

Part 2: Hobs – Methods for measuring performance

FOREWORD

1) The International Electrotechnical Commission (IEC) is a worldwide organization for standardization comprising all national electrotechnical committees (IEC National Committees). The object of IEC is to promote international co-operation on all questions concerning standardization in the electrical and electronic fields. To this end and in addition to other activities, IEC publishes International Standards, Technical Specifications, Technical Reports, Publicly Available Specifications (PAS) and Guides (hereafter referred to as "IEC Publication(s)"). Their preparation is entrusted to technical committees; any IEC National Committee interested in the subject dealt with may participate in this preparatory work. International, governmental and non-governmental organizations liaising with the IEC also participate in this preparation. IEC collaborates closely with the International Organization for Standardization (ISO) in accordance with conditions determined by agreement between the two organizations.
2) The formal decisions or agreements of IEC on technical matters express, as nearly as possible, an international consensus of opinion on the relevant subjects since each technical committee has representation from all interested IEC National Committees.
3) IEC Publications have the form of recommendations for international use and are accepted by IEC National Committees in that sense. While all reasonable efforts are made to ensure that the technical content of IEC Publications is accurate, IEC cannot be held responsible for the way in which they are used or for any misinterpretation by any end user.
4) In order to promote international uniformity, IEC National Committees undertake to apply IEC Publications transparently to the maximum extent possible in their national and regional publications. Any divergence between any IEC Publication and the corresponding national or regional publication shall be clearly indicated in the latter.
5) IEC itself does not provide any attestation of conformity. Independent certification bodies provide conformity assessment services and, in some areas, access to IEC marks of conformity. IEC is not responsible for any services carried out by independent certification bodies.
6) All users should ensure that they have the latest edition of this publication.
7) No liability shall attach to IEC or its directors, employees, servants or agents including individual experts and members of its technical committees and IEC National Committees for any personal injury, property damage or other damage of any nature whatsoever, whether direct or indirect, or for costs (including legal fees) and expenses arising out of the publication, use of, or reliance upon, this IEC Publication or any other IEC Publications.
8) Attention is drawn to the Normative references cited in this publication. Use of the referenced publications is indispensable for the correct application of this publication.
9) Attention is drawn to the possibility that some of the elements of this IEC Publication may be the subject of patent rights. IEC shall not be held responsible for identifying any or all such patent rights.

International Standard IEC 60350-2 has been prepared by subcommittee 59K: Ovens and microwave ovens, cooking ranges and similar appliances, of IEC technical committee 59: Performance of household and similar electrical appliances.

This first edition of IEC 60350-2 is related to IEC 60350:1999 which shall be separated in two parts: one part for cooking ranges, ovens and steam ovens and the other part for hobs. This part 2 of IEC 60350 covers hobs, and IEC 60350-1 covers ovens.

This edition includes the following significant technical changes with respect to IEC 60350:1999:

– A measurement procedure for measuring the smallest detected diameter for induction hobs (see 7.5).

IEC 60350:1999 will be withdrawn after the publication of IEC 60350-1 and IEC 60350-2.

In this standard, terms in bold characters are defined in Clause 3.

Withdrawn

AVA Documents Document Sharing Hub

Full document details: IEC 60350-2 2011

The text of this standard is based on the following documents:

FDIS	Report on voting
59K/233/FDIS	59K/236/RVD

Full information on the voting for the approval of this standard can be found in the report on voting indicated in the above table.

This publication has been drafted in accordance with the ISO/IEC Directives, Part 2.

A list of all the parts in the IEC 60350 series, under the general title *Household electric cooking appliances*, can be found on the IEC website.

The committee has decided that the contents of this publication will remain unchanged until the stability date indicated on the IEC web site under "http://webstore.iec.ch" in the data related to the specific publication. At this date, the publication will be

- reconfirmed,
- withdrawn,
- replaced by a revised edition, or
- amended.

withdrawn

Documents
Document Sharing Hub

Full document details: IEC 60350-2 2011

HOUSEHOLD ELECTRIC COOKING APPLIANCES –

Part 2: Hobs – Methods for measuring performance

Withdrawn

1 Scope

This part of IEC 60350 defines methods for measuring the performance of electric **hobs** for household use.

NOTE 1 Appliances covered by this standard may be built-in or for placing on a working surface or the floor. The hob can also be a part of a cooking range.

NOTE 2 This standard does not apply to

– portable appliances for cooking, grilling and similar functions (IEC 61817).

This standard defines the main performance characteristics of these appliances which are of interest to the user and specifies methods for measuring these characteristics.

NOTE 3 Some of the tests which are specified in this standard are not considered to be reproducible since the results may vary between laboratories. They are therefore intended for comparative testing purposes only.

This standard does not specify requirements for performance.

NOTE 4 This standard does not deal with safety requirements (IEC 60335-2-6 and IEC 60335-2-9).

2 Normative references

The following referenced documents are indispensable for the application of this document. For dated references, only the edition cited applies. For undated references, the latest edition of the referenced document (including any amendments) applies.

IEC 62301:2005[1], *Household electrical appliances – Measurement of standby power*

3 Terms and definitions

For the purposes of this document, the following terms and definitions apply.

3.1
cooking range
appliance having a **hob** and at least one **oven**. It may incorporate a **grill**

NOTE Methods for measuring performance of ovens are described in IEC 60350-1.

3.2
hob
appliance or part of an appliance which incorporates one or more **cooking zones**

NOTE A hob is also known as a cooktop.

3.3
cooking zone
part of the **hob** or area marked on the surface of a **hob** on which pans are placed for heating

[1] This document has been replaced by a new edition (2011), but for the purposes of this standard, the 2005 edition is cited.

Documents
Document Sharing Hub

Full document details: IEC 60350-2 2011

3.4
hotplate
part attached to the surface of a **hob** which forms a **cooking zone**

3.5
solid hotplate
hotplate having a closed surface which is usually constructed from cast iron with an integrated heating element

3.6
tubular hotplate
hotplate having a surface which is formed by the configuration of a tubular sheathed heating element in a substantially flat plane

3.7
glass ceramic hob
hob in which the heating elements are located beneath a glass ceramic surface

3.8
induction cooking zone
cooking zone on which the pan is heated by means of eddy currents

NOTE 1 The eddy currents are induced in the bottom of the pan by the electromagnetic field of a coil.

NOTE 2 The hob surface may be of glass ceramic.

4 List of measurements

4.1 Dimensions and mass

The following measurements are carried out:

– overall dimensions (see 6.1);
– dimensions of **hotplates** and **cooking zones** (see 6.2);
– level of **hotplates** (see 6.3);
– distance between the **hotplates** or **cooking zones** (see 6.4);
– mass of the appliance (see 6.5).

4.2 Hotplates and cooking zones

The following tests are carried out:

– ability to heat water (see 7.1);
– ability to control the temperature of a load (see 7.2);
– heat distribution (see 7.3);
– heat performance of hobs (see 7.4);
– smallest detected diameter for induction hobs (see 7.5).

4.3 Cleaning

– Spillage capacity of hobs (see Clause 9).

Withdrawn

AVA Documents
Document Sharing Hub

Full document details: IEC 60350-2 2011

5 General conditions for the measurements

5.1 Test room

The tests are carried out in a substantially draught-free room in which the ambient temperature is maintained at 20 °C ± 5 °C.

The measurement of the ambient temperature shall not be influenced by the appliance itself or by any other appliance.

5.2 Electricity supply

The appliance is supplied at rated voltage, ± 1 %.

If the appliance has a rated voltage range, the tests are carried out at the nominal voltage of the country where the appliance is intended to be used.

NOTE In case of a fixed cable, the plug (or the end of the cable) is the reference point to maintain the voltage.

5.3 Instrumentation

The temperature measuring instrument including thermocouples shall have an accuracy of 0,5 K within the temperature range of 0 °C to 100 °C and an accuracy of 2 K within the temperature range 100 °C to 300 °C.

The energy measuring meter shall have an accuracy of 1 %.

5.4 Positioning the appliance

Built-in appliances are installed in accordance with the instructions for installation. Other appliances are placed with their back against a wall, unless otherwise specified in the instructions.

Floor-standing appliances are positioned between kitchen cabinets. Table-top appliances are positioned away from side walls.

5.5 Setting of controls

The control is set to give the temperature specified for the test. However, if the temperature cannot be attained due to the construction of the control, the nearest setting related to the specified temperature is chosen.

6 Dimensions and mass

6.1 Overall dimensions

The overall dimensions of the appliance are measured and stated in millimetres as follows:

– cooking ranges and other appliances placed on a surface are measured as shown in Figure 1;

– built-in **hobs** are measured as shown in Figure 2.

Withdrawn

Documents
Document Sharing Hub

Full document details: IEC 60350-2 2011

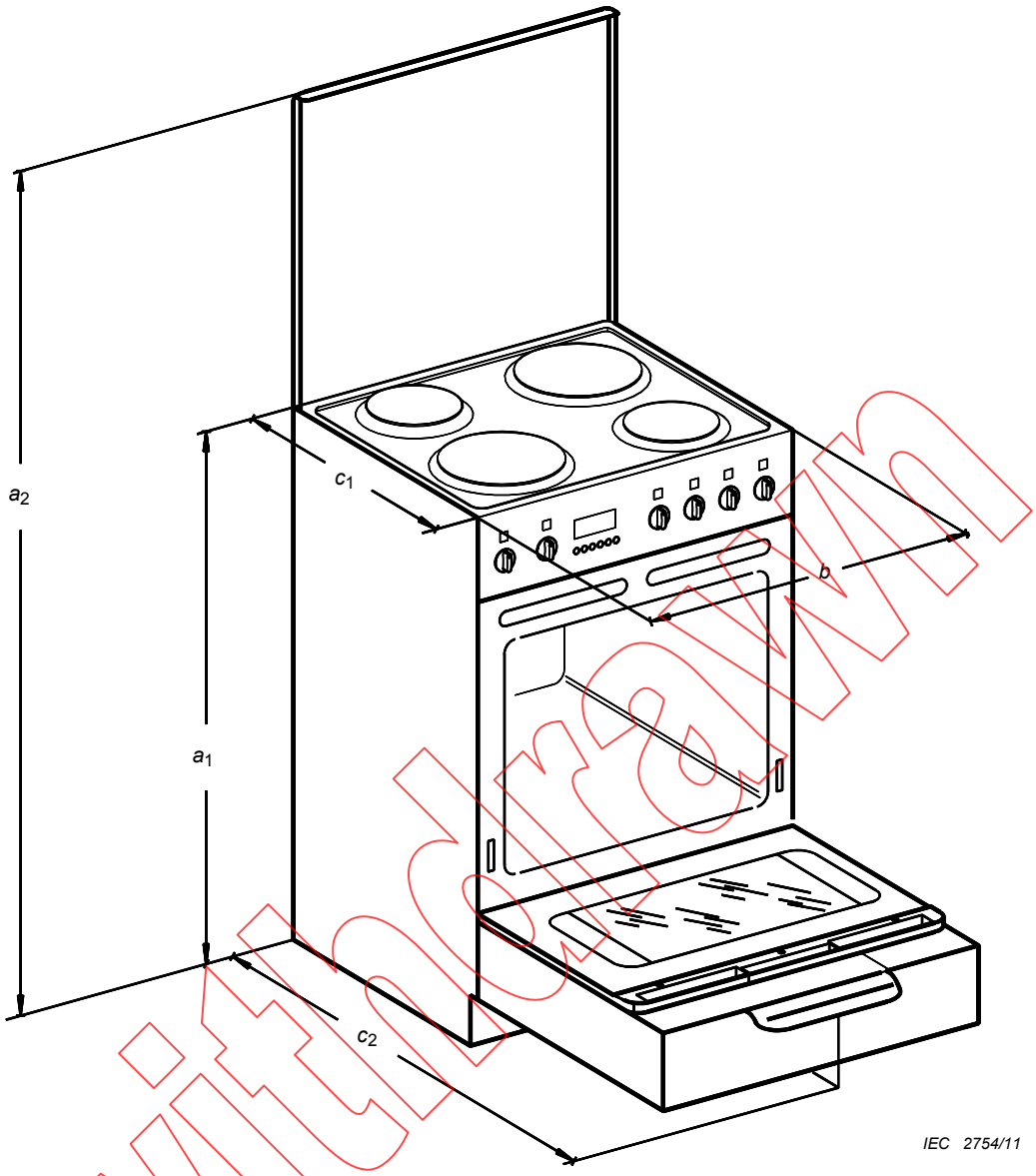

Withdrawn

Key

a_1 height from the supporting surface to the hob surface

NOTE If adjustable feet are provided, the height is measured with the feet in both extreme positions.

b overall width of the appliance

a_2 maximum height from the supporting surface to the uppermost part of the appliance, with any lid in the open position

c_1 depth of the appliance, ignoring any knobs, etc.

c_2 maximum depth of the appliance, with any doors and drawers fully open

Figure 1 – Dimensions of appliances

Documents
Document Sharing Hub
Full document details: IEC 60350-2 2011

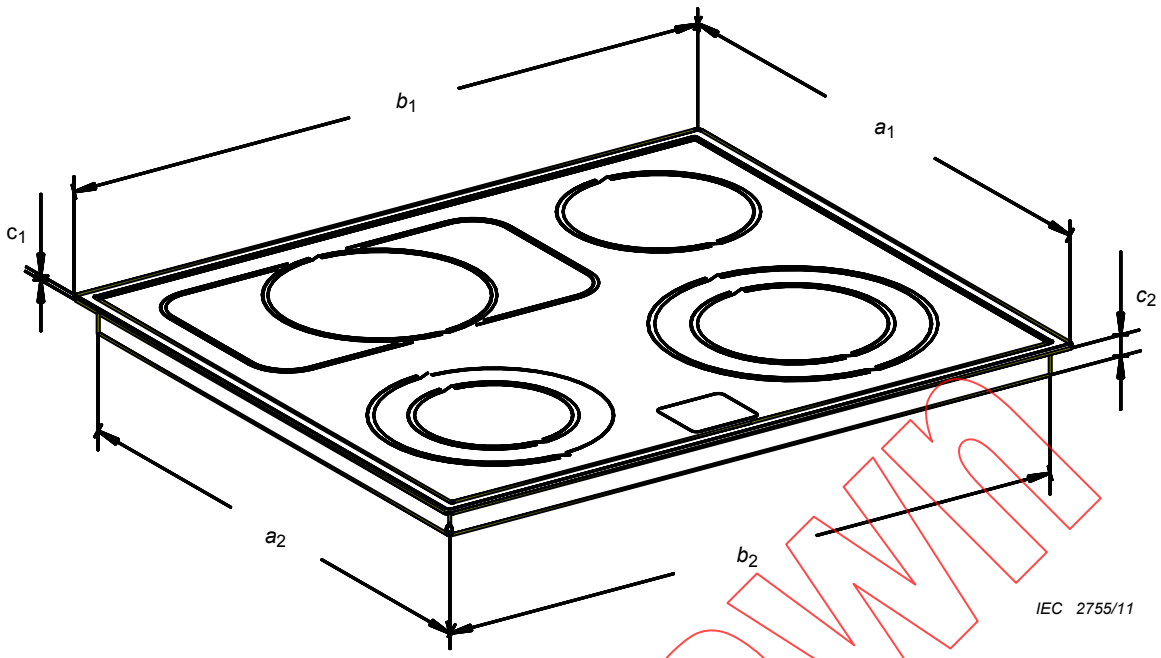

Key

a_1 depth of the hob

b_1 width of the hob

c_1 height of the hob on the outside of the kitchen furniture

c_2 height of the hob on the inside of the kitchen furniture

a_2 depth of the hob on the inside of the kitchen furniture

b_2 width of the hob on the inside of the kitchen furniture

Figure 2 – Dimensions of built-in hobs

Withdrawn

6.2 Dimensions of hotplates and cooking zones

The main dimensions of **hotplates** and **cooking zones** are determined as follows:

– for **solid hotplates**, the diameter of the surface intended to come into direct contact with the bottom of saucepans is measured;

– for **tubular hotplates**, the diameter of the periphery excluding any lead-in section is measured;

– for **glass ceramic hobs**, the diameters of the **cooking zones** are measured.

The dimensions are indicated in millimetres rounded to the nearest 5 mm.

If the **hotplates** or **cooking zones** are not circular the dimensions are determined as follows:

– for rectangular shapes, the lengths of the sides are measured;

– for elliptical and similar shapes, the major and minor dimensions are measured.

NOTE If the markings identifying **cooking zones** are not clear, this is stated.

6.3 Level of hotplates

Cooking ranges with adjustable feet and **hobs** are installed with the perimeter of the hob surface horizontal.

A device consisting of a disc and an annular ring is placed centrally on the **hotplate**. A spirit level is placed centrally on the ring, as shown in Figure 3.

AVA Documents Document Sharing Hub

Full document details: IEC 60350-2 2011

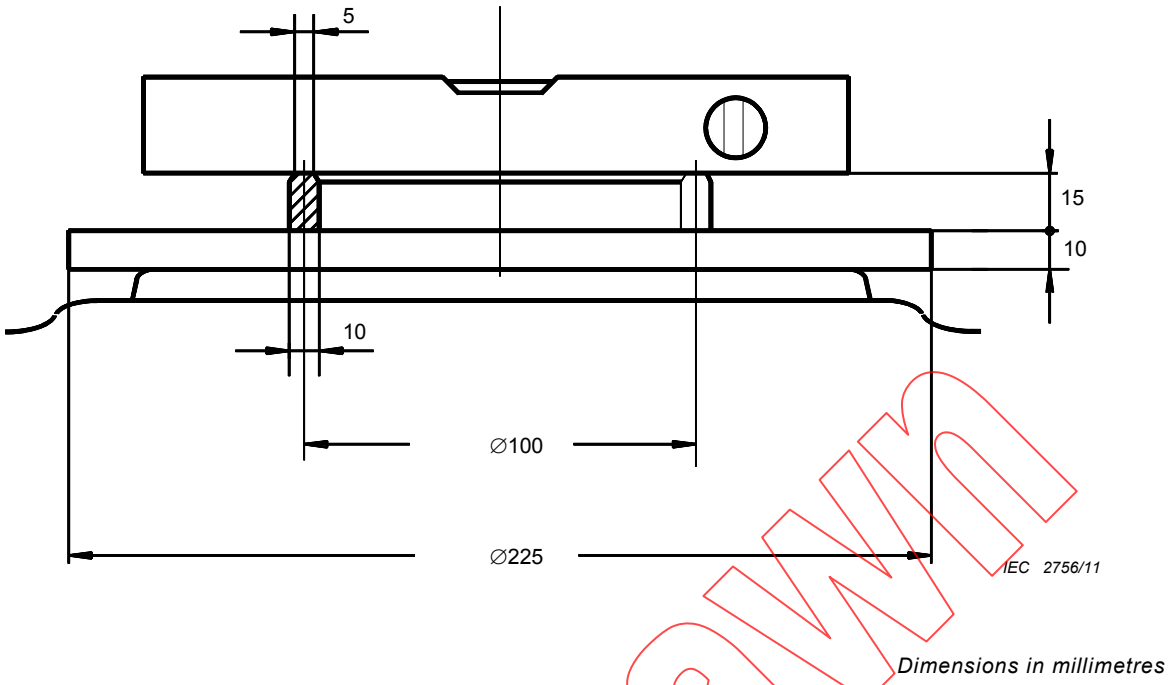

Figure 3 – Device for checking the level of hotplates

A mass of 3 kg is placed on each of the remaining **hotplates**.

The spirit level is rotated to the position where it shows the maximum inclination from the horizontal. Its lower side is then lifted to the horizontal by inserting a feeler gauge between the level and the ring.

The measurement is carried out on each **hotplate**.

The deviation from the horizontal is given by the thickness of the gauge, in millimetres, to two decimal places. It is expressed as a percentage, rounded to the nearest 0,1 %.

NOTE The direct conversion from millimetres to percentage is possible due to the ring having a diameter of 100 mm.

6.4 Distance between hotplates or cooking zones

The shortest distance between the edges of adjacent **hotplates** or **cooking zones** is measured and indicated in millimetres, rounded to the nearest millimetre. If the **hob** has more than two **hotplates** or **cooking zones**, the distance between each pair is determined.

NOTE The result may be shown by means of a sketch.

6.5 Mass of the appliance

The mass of the appliance, including accessories, is determined and expressed in kilograms, rounded to the nearest kilogram.

7 Hotplates and cooking zones

7.1 Ability to heat water

The purpose of this test is to assess the heat transfer from the **cooking zone** to water in a pan.

Withdrawn

Documents
Document Sharing Hub
Full document details: IEC 60350-2 2011

NOTE 1 This test is applicable for comparative testing only.

A steel saucepan which completely covers the **cooking zone** is used for the test, as specified in Figure 4.

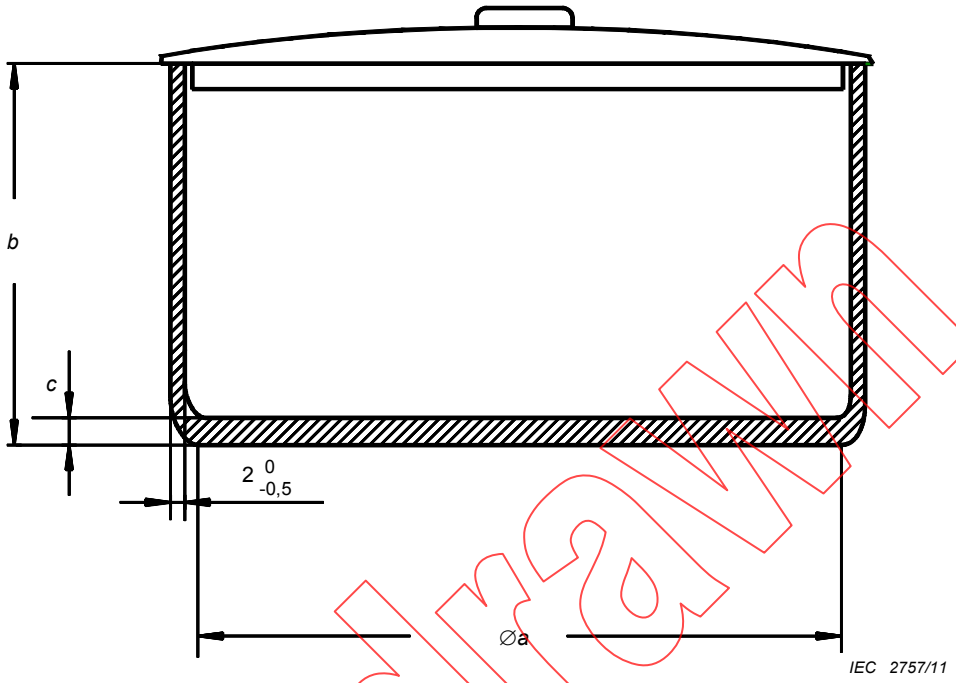

Dimensions in millimetres

Specification of the saucepan

Diameter of cooking zone mm	Dimensions of the saucepan		
	a	***b***	***c***
≤ 145	145	140	3
> 145 ≤ 180	180	140	≥ 3 ≤ 5
> 180 ≤ 220	220	140	≥ 3 ≤ 5

The saucepan is made of low carbon steel having a maximum carbon content of 0,08 %. It is cylindrical without metallic handles or protrusions. The diameter of the flat area at the base of the saucepan is to be at least the diameter of the **cooking zone**. The maximum concavity of the base of the saucepan is to be not more than 0,006 *a*, where *a* is the diameter of the flat area at the base of the saucepan. The base of the saucepan shall not be convex.

NOTE The lid is adapted to accommodate a stirrer.

Figure 4 – Saucepan

NOTE 2 In order to prevent distortion of the base, a pan with sidewalls glued to the base by silicon-rubber may be used for heating water.

NOTE 3 Commercially available pans which have equivalent thermal and mechanical properties may be used.

The saucepan is filled with the quantity of potable water specified in Table 1. The water has a temperature of 15 °C ± 1 °C. The saucepan covered with the lid is positioned centrally on the **cooking zone**.

NOTE 4 For non-circular **cooking zones**, an appropriately shaped saucepan may be used.

Withdrawn
Documents
Document Sharing Hub
Full document details: IEC 60350-2 2011

Table 1 – Quantity of water in the saucepan

Diameter of cooking zone mm	Quantity of water ℓ
≤ 145	1
> 145 and ≤ 180	1,5
> 180 and ≤ 220	2

The **cooking zone** is heated with the control set at maximum. During the test the water is stirred continuously with the aid of a non-metallic stirrer. The time taken for the water temperature to rise by 75 K and the corresponding energy consumption are measured. The test is repeated with the pan turned through 90 °.

The average value of the two results is determined.

The time is stated in minutes and seconds. The energy consumption is expressed in watt-hours.

7.2 Ability to control the temperature of a load

7.2.1 Temperature control

The purpose of this test is to check the function of a control.

NOTE 1 This test is applicable for comparative testing only.

NOTE 2 Controls may be automatic, step-by-step, energy-regulated or temperature-regulated.

A saucepan as shown in Figure 4 but without a lid is filled to a height of 30 mm with fresh sunflower oil at room temperature and placed on the **cooking zone**.

NOTE 3 Sunflower oil is considered to be fresh if it has not been used more than three times.

The **cooking zone** is heated with the control set at the minimum marked position. The temperature at the centre of the oil is recorded continuously by means of a thermocouple. The oil is not stirred. The time taken for the oil to reach a steady temperature is measured.

The test is repeated with the control set at the maximum position and also at an intermediate position.

NOTE 4 If a steady temperature is not reached within 30 min or when the oil temperature reaches 250 °C, the test is interrupted and the result noted.

The heating-up time and the temperature obtained for each setting are stated.

7.2.2 Temperature overshoot

The purpose of this test is to assess the heat retention of the **hotplate**.

NOTE This test is applicable for comparative testing only.

A saucepan, as shown in Figure 4 but without a lid, is filled to a height of 30 mm with fresh sunflower oil at room temperature and placed on the **cooking zone**.

The **cooking zone** is heated with the control set at the maximum position. The temperature at the centre of the oil is recorded. When the oil temperature reaches 80 °C ± 0,5 °C, the supply

Withdrawn

AVA Documents Document Sharing Hub

Full document details: IEC 60350-2 2011