IEC 60364-4-43

Edition 3.0 2008-08

INTERNATIONAL STANDARD

NORME INTERNATIONALE

Low-voltage electrical installations – Part 4-43: Protection for safety – Protection against overcurrent

Installations électriques à basse tension – Partie 4-43: Protection pour assurer la sécurité – Protection contre les surintensités

IEC 60364-4-43:2008

Documents
Document Sharing Hub

Full document details: IEC 60364-4-43 2008

THIS PUBLICATION IS COPYRIGHT PROTECTED

Copyright © 2008 IEC, Geneva, Switzerland

All rights reserved. Unless otherwise specified, no part of this publication may be reproduced or utilized in any form or by any means, electronic or mechanical, including photocopying and microfilm, without permission in writing from either IEC or IEC's member National Committee in the country of the requester.
If you have any questions about IEC copyright or have an enquiry about obtaining additional rights to this publication, please contact the address below or your local IEC member National Committee for further information.

Droits de reproduction réservés. Sauf indication contraire, aucune partie de cette publication ne peut être reproduite ni utilisée sous quelque forme que ce soit et par aucun procédé, électronique ou mécanique, y compris la photocopie et les microfilms, sans l'accord écrit de la CEI ou du Comité national de la CEI du pays du demandeur.
Si vous avez des questions sur le copyright de la CEI ou si vous désirez obtenir des droits supplémentaires sur cette publication, utilisez les coordonnées ci-après ou contactez le Comité national de la CEI de votre pays de résidence.

IEC Central Office
3, rue de Varembé
CH-1211 Geneva 20
Switzerland
Email: inmail@iec.ch
Web: www.iec.ch

About the IEC

The International Electrotechnical Commission (IEC) is the leading global organization that prepares and publishes International Standards for all electrical, electronic and related technologies.

About IEC publications

The technical content of IEC publications is kept under constant review by the IEC. Please make sure that you have the latest edition, a corrigenda or an amendment might have been published.

- Catalogue of IEC publications: www.iec.ch/searchpub
The IEC on-line Catalogue enables you to search by a variety of criteria (reference number, text, technical committee,…). It also gives information on projects, withdrawn and replaced publications.
- IEC Just Published: www.iec.ch/online_news/justpub
Stay up to date on all new IEC publications. Just Published details twice a month all new publications released. Available on-line and also by email.
- Electropedia: www.electropedia.org
The world's leading online dictionary of electronic and electrical terms containing more than 20 000 terms and definitions in English and French, with equivalent terms in additional languages. Also known as the International Electrotechnical Vocabulary online.
- Customer Service Centre: www.iec.ch/webstore/custserv
If you wish to give us your feedback on this publication or need further assistance, please visit the Customer Service Centre FAQ or contact us:
Email: csc@iec.ch
Tel.: +41 22 919 02 11
Fax: +41 22 919 03 00

A propos de la CEI

La Commission Electrotechnique Internationale (CEI) est la première organisation mondiale qui élabore et publie des normes internationales pour tout ce qui a trait à l'électricité, à l'électronique et aux technologies apparentées.

A propos des publications CEI

Le contenu technique des publications de la CEI est constamment revu. Veuillez vous assurer que vous possédez l'édition la plus récente, un corrigendum ou amendement peut avoir été publié.

- Catalogue des publications de la CEI: www.iec.ch/searchpub/cur_fut-f.htm
Le Catalogue en-ligne de la CEI vous permet d'effectuer des recherches en utilisant différents critères (numéro de référence, texte, comité d'études,…). Il donne aussi des informations sur les projets et les publications retirées ou remplacées.
- Just Published CEI: www.iec.ch/online_news/justpub
Restez informé sur les nouvelles publications de la CEI. Just Published détaille deux fois par mois les nouvelles publications parues. Disponible en-ligne et aussi par email.
- Electropedia: www.electropedia.org
Le premier dictionnaire en ligne au monde de termes électroniques et électriques. Il contient plus de 20 000 termes et définitions en anglais et en français, ainsi que les termes équivalents dans les langues additionnelles. Egalement appelé Vocabulaire Electrotechnique International en ligne.
- Service Clients: www.iec.ch/webstore/custserv/custserv_entry-f.htm
Si vous désirez nous donner des commentaires sur cette publication ou si vous avez des questions, visitez le FAQ du Service clients ou contactez-nous:
Email: csc@iec.ch
Tél.: +41 22 919 02 11
Fax: +41 22 919 03 00

Documents
Document Sharing Hub

Full document details: IEC 60364-4-43 2008

IEC 60364-4-43

Edition 3.0 2008-08

INTERNATIONAL STANDARD

NORME INTERNATIONALE

Low-voltage electrical installations – Part 4-43: Protection for safety – Protection against overcurrent

Installations électriques à basse tension – Partie 4-43: Protection pour assurer la sécurité – Protection contre les surintensités

INTERNATIONAL ELECTROTECHNICAL COMMISSION

COMMISSION ELECTROTECHNIQUE INTERNATIONALE

PRICE CODE
CODE PRIX

V

ICS 29.120.50; 91.140.50

ISBN 2-8318- 8318-9922-2

® Registered trademark of the International Electrotechnical Commission
Marque déposée de la Commission Electrotechnique Internationale

Documents
Document Sharing Hub

Full document details: IEC 60364-4-43 2008

CONTENTS

FOREWORD 4

43 Protection against overcurrent 6
430.1 Scope 6
430.2 Normative references 6
430.3 General requirements 7
431 Requirements according to the nature of the circuits 7
431.1 Protection of line conductors 7
431.2 Protection of the neutral conductor 7
431.3 Disconnection and reconnection of the neutral conductor in multi-phase systems 8
432 Nature of protective devices 8
432.1 Devices providing protection against both overload current and short-circuit current 8
432.2 Devices ensuring protection against overload current only 9
432.3 Devices ensuring protection against short-circuit current only 9
432.4 Characteristics of protective devices 9
433 Protection against overload current 9
433.1 Coordination between conductors and overload protective devices 9
433.2 Position of devices for overload protection 10
433.3 Omission of devices for protection against overload 10
433.4 Overload protection of conductors in parallel 11
434 Protection against short-circuit currents 12
434.1 Determination of prospective short-circuit currents 12
434.2 Position of devices for short-circuit protection 12
434.3 Omission of devices for protection against short-circuit 12
434.4 Short-circuit protection of conductors in parallel 13
434.5 Characteristics of short-circuit protective devices 13
435 Coordination of overload and short-circuit protection 15
435.1 Protection afforded by one device 15
435.2 Protection afforded by separate devices 15
436 Limitation of overcurrent by characteristics of supply 15

Annex A (informative) Protection of conductors in parallel against overcurrent 16
Annex B (informative) Conditions 1 and 2 of 433.1 21
Annex C (informative) Position or omission of devices for overload protection 22
Annex D (informative) Position or omission of devices for short-circuit protection 25
Annex E (informative) List of notes concerning certain countries 28

Bibliography 30

Figure A.1 – Circuit in which an overload protective device is provided for each of the m conductors in parallel 18
Figure A.2 – Circuit in which a single overload protective device is provided for the m conductors in parallel 19

AVA Documents
Document Sharing Hub
Full document details: IEC 60364-4-43 2008

Figure A.3 – Current flow at the beginning of the fault 19
Figure A.4 – Current flow after operation of the protective device cs 19
Figure A.5 – Illustration of linked protective device 20
Figure B.1 – Illustration of conditions 1 and 2 of 433.1 21
Figure C.1 – Overload protective device (P_2) NOT at the origin of branch circuit (B) (refer to 433.2.2a)) 22
Figure C.2 – Overload protective device (P_2) installed within 3 m of the origin of the branch circuit (B) (refer to 433.2.2b)) 23
Figure C.3 – Illustration of cases where overload protection may be omitted (refer to 433.3.1a), b) and d)) 23
Figure C.4 – Illustration of cases where overload protection may be omitted in an IT system 24
Figure D.1 – Limited change of position of short-circuit protective device (P_2) on a branch circuit (refer to 434.2.1) 25
Figure D.2 – Short-circuit protective device P_2 installed at a point on the supply side of the origin of a branch circuit (refer to 434.2.2) 26
Figure D.3 – Situation where the short-circuit protective device may be omitted for some applications (refer to 434.3) 27

Table 43A – Values of *k* for conductors 14

Documents
Document Sharing Hub

Full document details: IEC 60364-4-43 2008

INTERNATIONAL ELECTROTECHNICAL COMMISSION

LOW-VOLTAGE ELECTRICAL INSTALLATIONS –

Part 4-43: Protection for safety – Protection against overcurrent

FOREWORD

1) The International Electrotechnical Commission (IEC) is a worldwide organization for standardization comprising all national electrotechnical committees (IEC National Committees). The object of IEC is to promote international co-operation on all questions concerning standardization in the electrical and electronic fields. To this end and in addition to other activities, IEC publishes International Standards, Technical Specifications, Technical Reports, Publicly Available Specifications (PAS) and Guides (hereafter referred to as "IEC Publication(s)"). Their preparation is entrusted to technical committees; any IEC National Committee interested in the subject dealt with may participate in this preparatory work. International, governmental and non-governmental organizations liaising with the IEC also participate in this preparation. IEC collaborates closely with the International Organization for Standardization (ISO) in accordance with conditions determined by agreement between the two organizations.
2) The formal decisions or agreements of IEC on technical matters express, as nearly as possible, an international consensus of opinion on the relevant subjects since each technical committee has representation from all interested IEC National Committees.
3) IEC Publications have the form of recommendations for international use and are accepted by IEC National Committees in that sense. While all reasonable efforts are made to ensure that the technical content of IEC Publications is accurate, IEC cannot be held responsible for the way in which they are used or for any misinterpretation by any end user.
4) In order to promote international uniformity, IEC National Committees undertake to apply IEC Publications transparently to the maximum extent possible in their national and regional publications. Any divergence between any IEC Publication and the corresponding national or regional publication shall be clearly indicated in the latter.
5) IEC provides no marking procedure to indicate its approval and cannot be rendered responsible for any equipment declared to be in conformity with an IEC Publication.
6) All users should ensure that they have the latest edition of this publication.
7) No liability shall attach to IEC or its directors, employees, servants or agents including individual experts and members of its technical committees and IEC National Committees for any personal injury, property damage or other damage of any nature whatsoever, whether direct or indirect, or for costs (including legal fees) and expenses arising out of the publication, use of, or reliance upon, this IEC Publication or any other IEC Publications.
8) Attention is drawn to the Normative references cited in this publication. Use of the referenced publications is indispensable for the correct application of this publication.
9) Attention is drawn to the possibility that some of the elements of this IEC Publication may be the subject of patent rights. IEC shall not be held responsible for identifying any or all such patent rights.

International Standard IEC 60364-4-43 has been prepared by IEC technical committee 64: Electrical installations and protection against electric shock.

This third edition cancels and replaces the second edition, published in 2001, and constitutes a technical revision.

The main changes with respect to the previous edition are listed below:

– Annex B "IEC 60364 – Parts 1 to 6: Restructuring" deleted.
– Introduction of new informative Annexes B, C and D.
– Information concerning flexible cables added to Scope.
– The word "phase" changed to "line" throughout the standard.
– Requirement not to distribute the neutral in IT systems changed to a NOTE.
– Requirements added for overload detection for the neutral conductor for harmonic currents.

AVA Documents
Document Sharing Hub

Full document details: IEC 60364-4-43 2008

– Requirement that devices for protection against short-circuit current be capable of making as well as breaking short-circuit current added.
– Information added to clarify protection against overload current.
– Requirements where devices for protection against overload need not be provided expanded.
– More examples given where omission of devices for protection against overload is permitted.
– Requirements where devices for protection against short-circuit need not be provided expanded.
– Requirements for short-circuit current ratings of busbar trunking systems added.

The text of this standard is based on the following documents:

FDIS	Report on voting
64/1641/FDIS	64/1656/RVD

Full information on the voting for the approval of this standard can be found in the report on voting indicated in the above table.

This publication has been drafted in accordance with the ISO/IEC Directives, Part 2.

The reader's attention is drawn to the fact that Annex E lists all of the "in-some-country" clauses on differing practices of a less permanent nature relating to the subject of this standard.

A list of all parts in the IEC 60364 series, under the general title *Low-voltage electrical installations*, can be found on the IEC website.

Future standards in this series will carry the new general title as cited above. Titles of existing standards in this series will be updated at the time of the next edition.

The committee has decided that the contents of this publication will remain unchanged until the maintenance result date indicated on the IEC web site under "http://webstore.iec.ch" in the data related to the specific publication. At this date, the publication will be

- reconfirmed,
- withdrawn,
- replaced by a revised edition, or
- amended.

The contents of the corrigendum of October 2008 have been included in this copy.

Documents
Document Sharing Hub

Full document details: IEC 60364-4-43 2008

LOW-VOLTAGE ELECTRICAL INSTALLATIONS –

Part 4-43: Protection for safety – Protection against overcurrent

43 Protection against overcurrent

430.1 Scope

This part of IEC 60364 provides requirements for the protection of live conductors from the effects of overcurrents.

This standard describes how live conductors are protected by one or more devices for the automatic disconnection of the supply in the event of overload (Clause 433) and short-circuit (Clause 434) except in cases where the overcurrent is limited in accordance with Clause 436 or where the conditions described in 433.3 (omission of devices for protection against overload) or 434.3 (omission of devices for protection against short-circuit) are met. Coordination of overload protection and short-circuit protection is also covered (Clause 435).

NOTE 1 Live conductors protected against overload in accordance with Clause 433 are considered to be protected also against faults likely to cause overcurrents of a magnitude similar to overload currents.

NOTE 2 The requirements of this standard do not take account of external influences.

NOTE 3 Protection of conductors according to this standard does not necessarily protect the equipment connected to the conductors.

NOTE 4 Flexible cables connecting equipment by plugs and socket-outlet to fixed installations are not part of the scope of this standard and for this reason are not necessarily protected against overcurrent.

NOTE 5 Disconnection does not mean isolation in this standard.

430.2 Normative references

The following referenced documents are indispensable for the application of this document. For dated references, only the edition cited applies. For undated references, the latest edition of the referenced document (including any amendments) applies.

IEC 60269-2, *Low-voltage fuses – Part 2: Supplementary requirements for fuses for use by authorized persons (fuses mainly for industrial application) – Examples of standardized systems of fuses A to I*

IEC 60269-3, *Low-voltage fuses – Part 3: Supplementary requirements for fuses for use by unskilled persons (fuses mainly for household and similar applications) – Examples of standardized systems of fuses A to F*

IEC 60269-4, *Low-voltage fuses – Part 4: Supplementary requirements for fuse-links for the protection of semiconductor devices*

IEC 60364-4-41, *Low-voltage electrical installations – Part 4-41: Protection for safety – Protection against electric shock*

IEC 60364-5-52:2001, *Electrical installations of buildings – Part 5-52: Selection and erection of electrical equipment – Wiring systems*

IEC 60439-2, *Low-voltage switchgear and controlgear assemblies – Part 2: Particular requirements for busbar trunking systems (busways)*

AVA Documents
Document Sharing Hub

Full document details: IEC 60364-4-43 2008

IEC 60724, *Short-circuit temperature limits of electric cables with rated voltages of 1 kV (U_m = 1,2 kV) and 3 kV (U_m = 3,6 kV)*

IEC 60898 (all parts), *Electrical accessories – Circuit-breakers for overcurrent protection for household and similar installations*

IEC 60947-2, *Low-voltage switchgear and controlgear – Part 2: Circuit-breakers*

IEC 60947-3, *Low-voltage switchgear and controlgear – Part 3: Switches, disconnectors, switch-disconnectors and fuse-combination units*

IEC 60947-6-2, *Low-voltage switchgear and controlgear – Part 6-2: Multiple function equipment – Control and protective switching devices (or equipment) (CPS)*

IEC 61009 (all parts), *Residual current operated circuit-breakers with integral overcurrent protection for household and similar uses (RCBOs)*

IEC 61534 (all parts), *Powertrack systems*

430.3 General requirements

Protective devices shall be provided to disconnect any overcurrent in the circuit conductors before such a current could cause danger due to thermal or mechanical effects detrimental to insulation, joints, terminations or material surrounding the conductors.

431 Requirements according to the nature of the circuits

431.1 Protection of line conductors

431.1.1 Detection of overcurrent shall be provided for all line conductors, except where 431.1.2 applies. It shall cause the disconnection of the conductor in which the overcurrent is detected but not necessarily the disconnection of the other live conductors.

If disconnection of a single phase may cause danger, for example in the case of a three-phase motor, appropriate precautions shall be taken.

431.1.2 In a TT or TN system, for a circuit supplied between line conductors and in which the neutral conductor is not distributed, overcurrent detection need not be provided for one of the line conductors, provided that the following conditions are simultaneously fulfilled:

a) there exists, in the same circuit or on the supply side, protection intended to detect unbalanced loads and intended to cause disconnection of all the line conductors;

b) the neutral conductor is not distributed from an artificial neutral point of the circuits situated on the load side of the protective device mentioned in a).

431.2 Protection of the neutral conductor

431.2.1 TT or TN systems

Where the cross-sectional area of the neutral conductor is at least equivalent to that of the line conductors, and the current in the neutral is expected not to exceed the value in the line conductors, it is not necessary to provide overcurrent detection for the neutral conductor or a disconnecting device for that conductor.

Documents
Document Sharing Hub
Full document details: IEC 60364-4-43 2008

Where the cross-sectional area of the neutral conductor is less than that of the line conductors, it is necessary to provide overcurrent detection for the neutral conductor, appropriate to the cross-sectional area of that conductor; this detection shall cause the disconnection of the line conductors, but not necessarily of the neutral conductor.

In both cases the neutral conductor shall be protected against short-circuit current.

NOTE This protection may be achieved by the overcurrent protective devices in the line conductors. In that case it is not necessary to provide overcurrent protection for the neutral conductor or a disconnecting device for that conductor.

Where the current in the neutral conductor is expected to exceed the value in the line conductors, refer to 431.2.3.

Except for disconnection the requirements for a neutral conductor apply to a PEN conductor.

431.2.2 IT systems

Where the neutral conductor is distributed, it is necessary to provide overcurrent detection for the neutral conductor of every circuit. The overcurrent detection shall cause the disconnection of all the live conductors of the corresponding circuit, including the neutral conductor. This measure is not necessary if

– the particular neutral conductor is effectively protected against overcurrent by a protective device placed on the supply side, for example at the origin of the installation, or if
– the particular circuit is protected by a residual current operated protective device with a rated residual current not exceeding 0,20 times the current-carrying capacity of the corresponding neutral conductor. This device shall disconnect all the live conductors of the corresponding circuit, including the neutral conductor. The device shall have sufficient breaking capacity for all poles.

NOTE In IT systems, it is strongly recommended that the neutral conductor should not be distributed.

431.2.3 Harmonic currents

Overload detection shall be provided for the neutral conductor in a multi-phase circuit where the harmonic content of the line currents is such that the current in the neutral conductor is expected to exceed the current-carrying capacity of that conductor. The overload detection shall be compatible with the nature of the current through the neutral and shall cause the disconnection of the line conductors but not necessarily the neutral conductor. Where the neutral is disconnected, the requirements of 431.3 apply.

NOTE Further requirements regarding protection of neutral conductors are given in IEC 60364-5-52.

431.3 Disconnection and reconnection of the neutral conductor in multi-phase systems

Where disconnection of the neutral conductor is required, disconnection and reconnection shall be such that the neutral conductor shall not be disconnected before the line conductors and shall be reconnected at the same time as or before the line conductors.

432 Nature of protective devices

The protective devices shall be of the appropriate types indicated by 432.1 to 432.3.

432.1 Devices providing protection against both overload current and short-circuit current

Except as stated in 434.5.1, a device providing protection against both overload and short-circuit current shall be capable of breaking and, for a circuit-breaker, making any overcurrent

AVA Documents
Document Sharing Hub

Full document details: IEC 60364-4-43 2008

up to and including the prospective short-circuit current at the point where the device is installed. Such devices may be:

– circuit-breakers incorporating overload and short-circuit release;
– circuit-breakers in conjunction with fuses;
– fuses having fuse links with gG characteristics.

NOTE 1 The fuse comprises all the parts that form the complete protective device.

NOTE 2 This subclause does not exclude the use of other protective devices if the requirements in 433.1 and 434.5 are fulfilled.

432.2 Devices ensuring protection against overload current only

These protective devices shall satisfy the requirements of Clause 433 and may have an interrupting capacity below the value of the prospective short-circuit current at the point where the devices are installed.

NOTE 1 These devices are generally inverse time lag protective devices.

NOTE 2 Fuses type aM do not protect against overload.

432.3 Devices ensuring protection against short-circuit current only

A device providing protection against short-circuit current only shall be installed where overload protection is achieved by other means or where Clause 433 permits overload protection to be dispensed with. Such a device shall be capable of breaking, and for a circuit-breaker making, the short-circuit current up to and including the prospective short-circuit current. Such a device shall satisfy the requirements of Clause 434.

Such devices may be

– circuit-breakers with short-circuit release only,
– fuses with gM, aM type fuse links.

432.4 Characteristics of protective devices

The operating characteristics of overcurrent protective devices shall comply with those specified in, for example, IEC 60898, IEC 60947-2, IEC 60947-6-2, IEC 61009, IEC 60269-2, IEC 60269-3, IEC 60269-4 or IEC 60947-3.

NOTE The use of other devices is not excluded provided that their time/current characteristics provide an equivalent level of protection to that specified in this clause.

433 Protection against overload current

433.1 Coordination between conductors and overload protective devices

The operating characteristics of a device protecting a cable against overload shall satisfy the two following conditions:

$$I_B \leq I_n \leq I_Z \quad (1)$$

$$I_2 \leq 1{,}45 \times I_Z \quad (2)$$

where

I_B is the design current for that circuit;

I_Z is the continuous current-carrying capacity of the cable (see Clause 523);

I_n is the rated current of the protective device;

NOTE 1 For adjustable protective devices, the rated current I_n is the current setting selected.

Documents
Document Sharing Hub

Full document details: IEC 60364-4-43 2008

I_2 is the current ensuring effective operation in the conventional time of the protective device.

The current I_2 ensuring effective operation of the protective device shall be provided by the manufacturer or as given in the product standard.

Protection in accordance with this clause may not ensure protection in certain cases, for example where sustained overcurrents less than I_2 occur. In such cases, consideration should be given to selecting a cable with a larger cross-sectional area.

NOTE 2 I_B is the design current through the line or the permanent current through neutral in case of a high level of the third harmonic

NOTE 3 The current ensuring effective operation in the conventional time of protective devices may also be named I_t or I_f according to the product standards. Both I_t and I_f are multiples of I_n and attention should be given to the correct representation of values and indexes.

NOTE 4 See Annex B for an illustration of conditions (1) and (2) of 433.1.

NOTE 5 Design current I_B can be considered as an actual current I_a after applying correction factors. See Clause 311.

433.2 Position of devices for overload protection

433.2.1 A device ensuring protection against overload shall be placed at the point where a change, such as a change in cross-sectional area, nature, method of installation or in constitution, causes a reduction in the value of current-carrying capacity of the conductors, except where 433.2.2 and 433.3 apply.

433.2.2 The device protecting the conductor against overload may be placed along the run of that conductor if the part of the run between the point where a change occurs (in cross-sectional area, nature, method of installation or constitution) and the position of the protective device has neither branch circuits nor socket-outlets and fulfils at least one of the following two conditions:

a) it is protected against short-circuit current in accordance with the requirements stated in Clause 434;

b) its length does not exceed 3 m, it is carried out in such a manner as to reduce the risk of short-circuit to a minimum, and it is installed in such a manner as to reduce to a minimum the risk of fire or danger to persons (see also 434.2.1).

NOTE For installation according to a) see Figure C.1. For installation according to b) see Figure C.2.

433.3 Omission of devices for protection against overload

The various cases stated in this subclause shall not be applied to installations situated in locations presenting a fire risk or risk of explosion or where the requirements for special installations and locations specify different conditions.

433.3.1 General

Devices for protection against overload need not be provided:

a) for a conductor situated on the load side of a change in cross-sectional area, nature, method of installation or in constitution, that is effectively protected against overload by a protective device placed on the supply side;

b) for a conductor that is not likely to carry overload current, provided that this conductor is protected against short-circuit in accordance with the requirements of Clause 434 and that it has neither branch circuits nor socket-outlets;

c) at the origin of an installation where the distributor provides an overload device and agrees that it affords protection to the part of the installation between the origin and the main distribution point of the installation where further overload protection is provided.

AVA Documents
Document Sharing Hub
Full document details: IEC 60364-4-43 2008

d) for circuits for telecommunications, control, signalling and the like.

NOTE For installations according to a), b) and d), see Figure C.3.

433.3.2 Position or omission of devices for protection against overload in IT systems

433.3.2.1 The provisions in 433.2.2 and 433.3.1 for an alternative position or omission of devices for protection against overload are not applicable to IT systems unless each circuit not protected against overload is protected by one of the following means:

a) use of the protective measures described in Clause 412 of IEC 60364-4-41;

b) protection of each circuit by a residual current protective device that will operate immediately on a second fault;

c) for permanently supervised systems only use of insulation monitoring which either:

- causes the disconnection of the circuit when the first fault occurs, or
- gives a signal indicating the presence of a fault. The fault shall be rectified according to the operational requirements and recognizing the risk from a second fault.

NOTE It is recommended to install an insulation fault location system according to IEC 61557-9. With the application of such a system it is possible to detect and locate the insulation fault without interruption of the supply.

433.3.2.2 In IT systems without a neutral conductor, the overload protective device may be omitted in one of the phase conductors if a residual current protective device is installed in each circuit.

433.3.3 Cases where omission of devices for overload protection shall be considered for safety reasons

The omission of devices for protection against overload is permitted for circuits supplying current-using equipment where unexpected disconnection of the circuit could cause danger or damage. Examples of such cases include:

- exciter circuits of rotating machines;
- supply circuits of lifting magnets;
- secondary circuits of current transformers;
- circuits which supply fire extinguishing devices;
- circuits supplying safety services (burglar alarm, gas alarms, etc.).

NOTE In such cases, consideration should be given to the provision of an overload alarm.

433.4 Overload protection of conductors in parallel

Where a single protective device protects several conductors in parallel, there shall be no branch circuits or devices for isolation or switching in the parallel conductors.

This subclause does not preclude the use of ring final circuits.

433.4.1 Equal current sharing between parallel conductors

Where a single device protects conductors in parallel sharing currents equally, the value of I_z to be used in 433.1 is the sum of the current-carrying capacities of the various conductors.

It is deemed that current sharing is equal if the requirements of the first indent of 523.7 a) of IEC 60364-5-52:2001 are satisfied.

Documents
Document Sharing Hub

Full document details: IEC 60364-4-43 2008

433.4.2 Unequal current sharing between parallel conductors

Where the use of a single conductor, per phase, is impractical and the currents in the parallel conductors are unequal, the design current and requirements for overload protection for each conductor shall be considered individually.

NOTE Currents in parallel conductors are considered to be unequal if the difference between any currents is more than 10 % of the design current for each conductor. Guidance is given in Clause A.2.

434 Protection against short-circuit currents

This standard only considers the case of short-circuit between conductors belonging to the same circuit.

434.1 Determination of prospective short-circuit currents

The prospective short-circuit current at every relevant point of the installation shall be determined. This may be carried out either by calculation or by measurement.

NOTE The prospective short-circuit current at the supply point may be obtained from the supply utility.

434.2 Position of devices for short-circuit protection

A device ensuring protection against short-circuit shall be placed at the point where a reduction in the cross-sectional area of the conductors or another change causes a change to the current-carrying capacity of the conductors, except where 434.2.1 434.2.2 or 434.3 applies.

434.2.1 The various cases stated in the following subclause shall not be applied to installations situated in locations presenting a fire risk or risk of explosion and where special rules for certain locations specify different conditions. The device for protection against short-circuit may be placed other than as specified in 434.2, under the following conditions.

In the part of the conductor between the point of reduction of cross-sectional area or other change and the position of the protective device there shall be no branch circuits nor socket-outlets and that part of the conductor shall

a) not exceed 3 m in length, and

b) be installed in such a manner as to reduce the risk of a short-circuit to a minimum, and

NOTE 1 This condition may be obtained for example by reinforcing the protection of the wiring against external influences.

NOTE 2 See Figure D.1.

c) not be placed close to combustible material.

434.2.2 A protective device may be placed on the supply side of the reduced cross-sectional area or another change made, provided that it possesses an operating characteristic such that it protects the wiring situated on the load side against short-circuit, in accordance with 434.5.2.

NOTE The requirements of 434.2.2 may be met by the method given in Annex D.

434.3 Omission of devices for protection against short-circuit

Provided that both of the following conditions are simultaneously fulfilled:

- the wiring is installed in such a way as to reduce the risk of a short-circuit to a minimum (see item b) of 434.2.1), and

Documents
Document Sharing Hub

Full document details: IEC 60364-4-43 2008

- the wiring is not placed close to combustible material,

devices for protection against short-circuit need not be provided for applications such as:

a) conductors connecting generators, transformers, rectifiers, accumulator batteries to the associated control panels, the protective devices being placed in these panels;

b) circuits where disconnection could cause danger for the operation of the installations concerned, such as those cited in 433.3.3;

c) certain measuring circuits;

d) at the origin of an installation where the distributor installs one or more devices providing protection against short-circuit and agrees that such a device affords protection to the part of the installation between the origin and the main distribution point of the installation where further short-circuit protection is provided.

434.4 Short-circuit protection of conductors in parallel

A single protective device may protect conductors in parallel against the effects of short-circuit provided that the operating characteristics of that device ensures its effective operation should a fault occur at the most onerous position in one of the parallel conductors. Account shall be taken of the sharing of the short-circuit currents between the parallel conductors. A fault can be fed from both ends of a parallel conductor.

If operation of a single protective device is not effective, then one or more of the following measures shall be taken:

a) The wiring shall be carried out in such a way as to reduce to a minimum the risk of a short-circuit in any parallel conductor, for example by protection against mechanical damage, and conductors shall be installed in such a manner as to reduce to a minimum the risk of fire or danger to persons.

b) For two conductors in parallel, a short-circuit protective device shall be provided at the supply end of each parallel conductor.

c) For more than two conductors in parallel, short-circuit protective devices shall be provided at the supply and load ends of each parallel conductor.

Guidance is given in Clause A.3.

434.5 Characteristics of short-circuit protective devices

Each short-circuit protective device shall meet the requirements given in 434.5.1.

434.5.1 The rated breaking capacity shall be not less than the prospective maximum short-circuit current at the place of its installation, except where the following paragraph applies.

A lower rated breaking capacity is permitted if another protective device having the necessary breaking capacity is installed on the supply side. In that case, the characteristics of the devices shall be coordinated so that the energy let through by these two devices does not exceed that which can be withstood without damage by the device on the load side and the conductors protected by these devices.

NOTE In certain cases other characteristics may need to be taken into account such as dynamic stresses and arcing energy for the device on the load side. Details of the characteristics needing coordination should be obtained from the manufacturers of the devices concerned.

434.5.2 For cables and insulated conductors, all current caused by a short-circuit occurring at any point of the circuit shall be interrupted in a time not exceeding that which brings the insulation of the conductors to the permitted limit temperature.

For operating times of protective devices <0,1 s where asymmetry of the current is of importance and for current-limiting devices k^2S^2 shall be greater than the value of the let-through energy (I^2t) quoted by the manufacturer of the protective device.

AVA Documents
Document Sharing Hub

Table 43A – Values of *k* for conductors

Property/ condition	Type of conductor insulation							
	PVC Thermoplastic		**PVC** Thermoplastic 90°C		**EPR XLPE** Thermosetting	**Rubber 60 °C** Thermosetting	**Mineral** PVC sheathed	**Mineral** Bare unsheathed
Conductor cross-sectional area mm²	≤ 300	>300	≤ 300	>300				
Initial temperature °C	70		90		90	60	70	105
Final temperature °C	160	140	160	140	250	200	160	250
Conductor material:								
Copper	115	103	100	86	143	141	115	135 -115 [a]
Aluminium	76	68	66	57	94	93	–	–
Tin-soldered joints in copper conductors	115	–	–	–	–	–	–	–

[a] This value shall be used for bare cables exposed to touch.

NOTE 1 Other values of *k* are under consideration for:

– small conductors (particularly for cross-sectional areas less than 10 mm²);
– other types of joints in conductors;
– bare conductors.

NOTE 2 The nominal current of the short-circuit protective device may be greater than the current-carrying capacity of the cable.

NOTE 3 The above factors are based on IEC 60724.

NOTE 4 See Annex A of IEC 60364-5-54:2002 for the calculation-method of factor *k*.

For short-circuits of duration up to 5 s, the time *t*, in which a given short-circuit current will raise the insulation of the conductors from the highest permissible temperature in normal duty to the limit temperature can, as an approximation, be calculated from the formula:

$$t = (k * S / I)^2 \qquad (3)$$

where

t is the duration, in s;

S is the cross-sectional area, in mm^2;

I is the effective short-circuit current, in A, expressed as an r.m.s. value;

k is a factor taking account of the resistivity, temperature coefficient and heat capacity of the conductor material, and the appropriate initial and final temperatures. For common conductor insulation, the values of *k* for line conductors are shown in Table 43A.

434.5.3 For busbar trunking systems complying with IEC 60439-2 and powertrack complying with the IEC 61534 series, one of the following requirements shall apply:

- The rated short-time withstand current (I_{CW}) and the rated peak withstand current of a busbar trunking or powertrack system shall not be lower than the prospective short-circuit current r.m.s. value and the prospective short-circuit peak current value, respectively. The maximum time for which the I_{CW} is defined for the busbar trunking or powertrack system shall not be less than the maximum operating time of the protective device.

AVA Documents Document Sharing Hub

Full document details: IEC 60364-4-43 2008

- The rated conditional short-circuit current of the busbar trunking or powertrack system associated with a specific protective device, shall not be lower than the prospective short-circuit current.

435 Coordination of overload and short-circuit protection

435.1 Protection afforded by one device

A protective device providing protection against overload and short-circuit currents shall fulfil the applicable requirements of Clauses of 433 and 434.

435.2 Protection afforded by separate devices

The requirements of Clauses 433 and 434 apply, respectively, to the overload protective device and the short-circuit protective device.

The characteristics of the devices shall be coordinated so that the energy let through by the short-circuit protective device does not exceed that which can be withstood without damage by the overload protective device.

NOTE This requirement does not exclude the type of coordination specified in IEC 60947-4-1.

436 Limitation of overcurrent by characteristics of supply

Conductors are considered to be protected against overload and short-circuit currents where they are supplied from a source incapable of supplying a current exceeding the current-carrying capacity of the conductors (e.g. certain bell transformers, certain welding transformers and certain types of thermoelectric generating sets).

Documents
Document Sharing Hub

Full document details: IEC 60364-4-43 2008

Annex A
(informative)

Protection of conductors in parallel against overcurrent

A.1 Introduction

Overcurrent protection for conductors connected in parallel should provide adequate protection for all of the parallel conductors. For two conductors of the same cross-sectional area, conductor material length and method of installation arranged to carry substantially equal currents, the requirements for overcurrent protection are straightforward. For more complex conductor arrangements, detailed consideration should be given to unequal current sharing between conductors and multiple fault current paths. This annex gives guidance on the necessary considerations.

NOTE A more detailed method for calculating the current between parallel conductors is given in IEC 60287-1-3.

A.2 Overload protection of conductors in parallel

When an overload occurs in a circuit containing parallel conductors of multicore cables, the current in each conductor will increase by the same proportion. Provided that the current is shared equally between the parallel conductors, a single protective device can be used to protect all the conductors. The current-carrying capacity (I_z) of the parallel conductors is the sum of the current-carrying capacity of each conductor, with the appropriate grouping and other factors applied.

The current sharing between parallel cables is a function of the impedance of the cables. For large, single-core cables the reactive component of the impedance is greater than the resistive component and will have a significant effect on the current sharing. The reactive component is influenced by the relative physical position of each cable. If, for example, a circuit consists of two large cables per phase, having the same length, construction and cross-sectional area and arranged in parallel but with adverse relative positioning (i.e. cables of the same phase bunched together) the current sharing may be 70 %/30 % rather than 50 %/50 %.

Where the difference in impedance between parallel conductors causes unequal current sharing, for example greater than 10 % difference, the design current and requirements for overload protection for each conductor should be considered individually.

The design current for each conductor can be calculated from the total load and the impedance of each conductor.

For a total of *m* conductors in parallel, the design current I_{BK} for conductor *k* is given by:

$$I_{Bk} = \frac{I_B}{\left(\frac{Z_k}{Z_1} + \frac{Z_k}{Z_2} + \cdots + \frac{Z_k}{Z_{k-1}} + \frac{Z_k}{Z_k} + \frac{Z_k}{Z_{k+1}} + \cdots + \frac{Z_k}{Z_m}\right)} \qquad \text{(A.1)}$$

where

I_B is the current for which the circuit is designed;

I_{BK} is the design current for conductor *k*;

Z_k is the impedance of conductor *k*;

Z_1 and Z_m are the impedances of conductors 1 and m, respectively.

Documents
Document Sharing Hub
Full document details: IEC 60364-4-43 2008

In case of parallel conductors up to and including 120 mm^2 the design current I_{BK} for conductor k is given by:

$$I_{Bk} = I_B \frac{S_k}{S_1 + S_2 + ... + S_m} \quad (A.2)$$

where

S_k is the cross-sectional area of conductor k;

S_1 … S_m is the cross-sectional area of the conductors.

In the case of single-core cables, the impedance is a function of the relative positions of the cables as well as the design of the cable, for example armoured or unarmoured. Methods for calculating the impedance are given in IEC 60287-1-3. It is recommended that current sharing between parallel cables is verified by measurement.

The design current I_{BK} is used in place of I_B for Equation (1) of 433.1 as follows:

$$I_{Bk} \leq I_n \leq I_{zk} \quad (A.3)$$

The value used for I_z in 433.1, Equations (1) and (2), is

either

the continuous current-carrying capacity of each conductor, I_{zk}, if an overload protective device is provided for each conductor (see Figure A.1) hence:

$$I_{Bk} \leq I_{nk} \leq I_{zk} \quad (A.4)$$

or

the sum of the current-carrying capacities of all the conductors, ΣI_{zk}, if a single overload protective device is provided for the conductors in parallel (see Figure A.2) hence:

$$I_B \leq I_n \leq \Sigma I_{zk} \quad (A.5)$$

where

I_{nk} is the nominal current of the protective device for conductor k;

I_{zk} is the continuous current-carrying capacity of conductor k;

I_n is the rated current of the protective device;

ΣI_{zk} is the sum of the continuous current-carrying capacities of the m conductors in parallel.

NOTE For busbar systems, information should be obtained either from the manufacturer or from IEC 60439-2.

Documents
Document Sharing Hub

Full document details: IEC 60364-4-43 2008

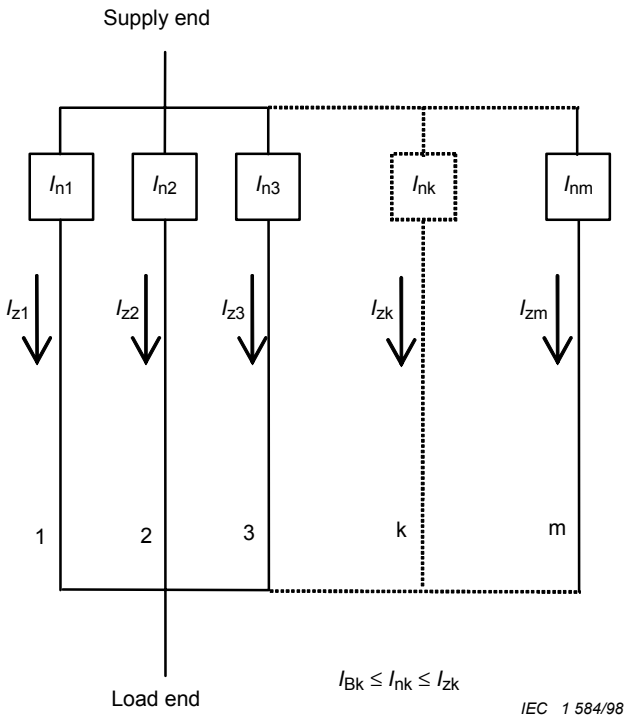

Figure A.1 – Circuit in which an overload protective device is provided for each of the m conductors in parallel

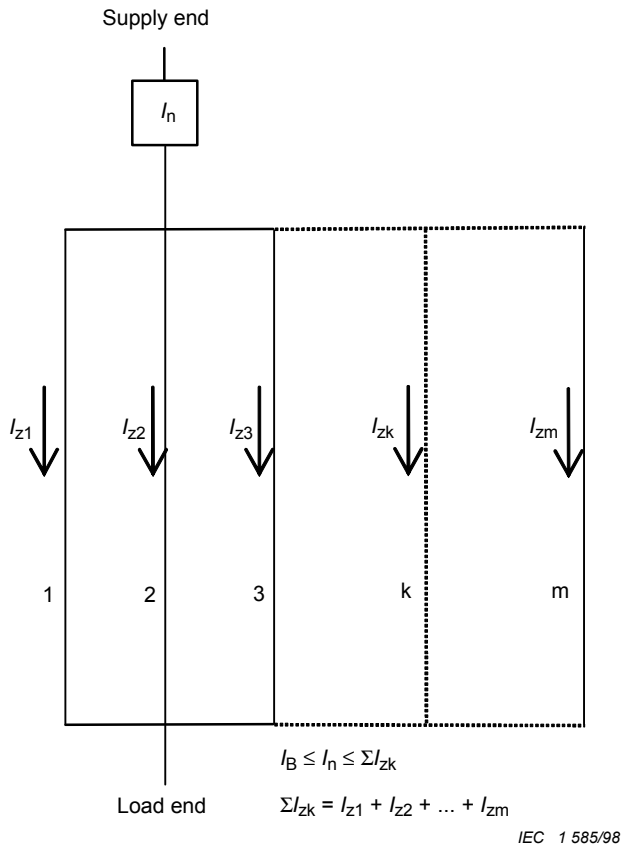

Figure A.2 – Circuit in which a single overload protective device is provided for the m conductors in parallel

Documents
Document Sharing Hub
Full document details: IEC 60364-4-43 2008