IEC 60364-4-44

Edition 3.0 2024-12

INTERNATIONAL STANDARD

colour inside

Low-voltage electrical installations –
Part 4-44: Protection for safety – Protection against voltage disturbances and electromagnetic disturbances

IEC 60364-4-44:2024-12(en)

Documents
Document Sharing Hub

Full document details: IEC 60364-4-44 2024

THIS PUBLICATION IS COPYRIGHT PROTECTED
Copyright © 2024 IEC, Geneva, Switzerland

All rights reserved. Unless otherwise specified, no part of this publication may be reproduced or utilized in any form or by any means, electronic or mechanical, including photocopying and microfilm, without permission in writing from either IEC or IEC's member National Committee in the country of the requester. If you have any questions about IEC copyright or have an enquiry about obtaining additional rights to this publication, please contact the address below or your local IEC member National Committee for further information.

IEC Secretariat
3, rue de Varembé
CH-1211 Geneva 20
Switzerland

Tel.: +41 22 919 02 11
info@iec.ch
www.iec.ch

About the IEC
The International Electrotechnical Commission (IEC) is the leading global organization that prepares and publishes International Standards for all electrical, electronic and related technologies.

About IEC publications
The technical content of IEC publications is kept under constant review by the IEC. Please make sure that you have the latest edition, a corrigendum or an amendment might have been published.

IEC publications search - webstore.iec.ch/advsearchform
The advanced search enables to find IEC publications by a variety of criteria (reference number, text, technical committee, …). It also gives information on projects, replaced and withdrawn publications.

IEC Just Published - webstore.iec.ch/justpublished
Stay up to date on all new IEC publications. Just Published details all new publications released. Available online and once a month by email.

IEC Customer Service Centre - webstore.iec.ch/csc
If you wish to give us your feedback on this publication or need further assistance, please contact the Customer Service Centre: sales@iec.ch.

IEC Products & Services Portal - products.iec.ch
Discover our powerful search engine and read freely all the publications previews, graphical symbols and the glossary. With a subscription you will always have access to up to date content tailored to your needs.

Electropedia - www.electropedia.org
The world's leading online dictionary on electrotechnology, containing more than 22 500 terminological entries in English and French, with equivalent terms in 25 additional languages. Also known as the International Electrotechnical Vocabulary (IEV) online.

Documents
Document Sharing Hub

Full document details: IEC 60364-4-44 2024

IEC 60364-4-44

Edition 3.0 2024-12

INTERNATIONAL STANDARD

colour inside

Low-voltage electrical installations – Part 4-44: Protection for safety – Protection against voltage disturbances and electromagnetic disturbances

INTERNATIONAL
ELECTROTECHNICAL
COMMISSION

ICS 91.140.50; 33.100.10; 33.100.20

ISBN 978-2-8327-0087-7

Warning! Make sure that you obtained this publication from an authorized distributor.

Documents
Document Sharing Hub

® Registered trademark of the International Electrotechnical Commission

Full document details: IEC 60364-4-44 2024

CONTENTS

FOREWORD 5
INTRODUCTION 7
440 Protection against voltage disturbances and electromagnetic disturbances 8
440.1 Scope 8
440.2 Normative references 8
440.3 Terms, definitions and symbols 9
440.3.1 Terms and definitions 9
440.3.2 Symbols 11
441 Void 12
442 Protection of low-voltage installations against temporary overvoltages due to earth faults in the high-voltage system and due to faults in the low-voltage system 12
442.1 Field of application 12
442.1.1 General 12
442.1.2 General requirements 12
442.2 Overvoltages in LV-systems during a high-voltage earth fault 12
442.2.1 General 12
442.2.2 Magnitude and duration of power-frequency fault voltage 14
442.2.3 Magnitude and duration of power-frequency stress voltages 15
442.2.4 Requirements for calculation of limits 16
442.3 Power-frequency stress voltage in case of loss of the neutral conductor in a TN and TT system 16
442.4 Power-frequency stress voltage in the event of an earth fault in an IT system with distributed neutral 16
442.5 Power-frequency stress voltage in the event of a short-circuit between a line conductor and the neutral conductor 17
443 Protection against transient overvoltages of atmospheric origin or due to switching 17
443.1 General 17
443.2 Void 18
443.3 Void 18
443.4 Overvoltage control 18
443.5 Risk assessment method 18
443.6 Classification of rated impulse voltages (overvoltage categories) 20
443.6.1 Purpose of classification of rated impulse voltages (overvoltage categories) 20
443.6.2 Rated impulse voltages of equipment and overvoltage categories 21
444 Measures against electromagnetic influences 22
444.1 General 22
444.2 Void 23
444.3 Void 23
444.4 Mitigation of electromagnetic interference (EMI) 23
444.4.1 General 23
444.4.2 Sources of EMI 23
444.4.3 Measures to reduce EMI 23
444.4.4 TN-system 25
444.4.5 TT system 28
444.4.6 IT system 29
444.4.7 Multiple-source supply 30

AVA Documents
Document Sharing Hub
Full document details: IEC 60364-4-44 2024

444.4.8 Transfer of supply ... 33
444.4.9 Services entering a building ... 36
444.4.10 Separate buildings ... 37
444.4.11 Inside buildings ... 37
444.4.12 Protective devices ... 39
444.4.13 Signal cables ... 39
444.5 Earthing and equipotential bonding ... 39
444.5.1 Interconnection of earth electrodes ... 39
444.5.2 Interconnection of incoming networks and earthing arrangements ... 39
444.5.3 Different structures for the network of equipotential conductors and earthing conductors ... 40
444.5.4 Equipotential bonding networks in buildings with several floors ... 42
444.5.5 Functional earthing conductor ... 43
444.5.6 Commercial or industrial buildings containing significant amounts of information technology equipment ... 44
444.5.7 Earthing arrangements and equipotential bonding of information technology installations for functional purposes ... 44
444.6 Segregation of circuits ... 45
444.6.1 General ... 45
444.6.2 Design requirements ... 45
444.6.3 Conditions for zero segregation ... 46
444.7 Cable management systems ... 47
444.7.1 General ... 47
444.7.2 Design guidelines ... 47
444.7.3 Installation guidelines ... 48
445 Protection against undervoltage ... 50
Annex A (informative) Examples of calculated risk level CRL for the use of SPDs ... 51
A.1 Example 1 – Building in rural environment ... 51
A.2 Example 2 – Building in rural environment powered in HV ... 51
A.3 Example 3 – Building in urban environment powered by overhead lines ... 52
A.4 Example 4 – Building in urban environment powered by underground cables ... 52
Annex B (informative) Guidance on overvoltage control by SPDs applied to overhead lines ... 53
Annex C (informative) List of notes concerning certain countries ... 54
Bibliography ... 56

Figure 1 – Representative schematic diagram for possible connections to earth in substation and LV-installation and occurring overvoltages in case of faults ... 13
Figure 2 – Tolerable fault voltage due to an earth-fault in the HV system ... 15
Figure 3 – Illustration of an installation showing the lengths to consider ... 20
Figure 4 – By-pass conductor for screen reinforcement to provide a common equipotential bonding system ... 24
Figure 5 – Example of a substitute or by-pass equipotential bonding conductor in a TT-system ... 25
Figure 6 – Avoidance of neutral conductor currents in a bonded structure by using the TN-S system from the origin of the public supply up to and including the final circuit within a building ... 26
Figure 7 – Avoidance of neutral conductor currents in a bonded structure by using a TN-S system downstream of a consumer's private supply transformer ... 27

AVA Documents
Document Sharing Hub
Full document details: IEC 60364-4-44 2024

Figure 8 – TN-C-S system within an existing building installation 28
Figure 9 – TT system within a building installation 29
Figure 10 – IT system within a building installation 30
Figure 11 – TN multiple-source power supply with a non-suitable multiple connection between PEN and earth 31
Figure 12 – TN multiple-source power supplies to an installation with connection to earth of the star points at one and the same point 32
Figure 13 – TT multiple-source power supplies to an installation with connection to earth of the star points at one and the same point 33
Figure 14 – Three-phase alternative power supply with a 4-pole switch 34
Figure 15 – Neutral current flow in a three-phase alternative power supply with an unsuitable 3-pole switch 35
Figure 16 – Single-phase alternative power supply with 2-pole switch 36
Figure 17 – Armoured cables and metal pipes entering the buildings (examples) 37
Figure 18 – Illustration of measures in an existing building 38
Figure 19 – Interconnected earth electrodes 39
Figure 20 – Examples of protective conductors in star network 40
Figure 21 – Example of multiple meshed bonding star network 41
Figure 22 – Example of a common meshed bonding star network 42
Figure 23 – Example of equipotential bonding networks in structures without lightning protection systems 43
Figure 24 – Example of cable separation distance 46
Figure 25 – Cable arrangements in metal cable trays 48
Figure 26 – Continuity of metallic system components 48
Figure 27 – Location of cables inside metallic construction elements 49
Figure 28 – Connection of metallic sections 49

Table 1 – Power-frequency stress voltages and power-frequency fault voltage in low-voltage system 14
Table 2 – Permissible power-frequency stress voltage 16
Table 3 – Calculation of f_{env} 19
Table 4 – Required rated impulse voltage of equipment U_{W} 22
Table 5 – Summary of minimum separation distances where the specification or intended application of the information and communication technology cable is not available 46

Documents
Document Sharing Hub
Full document details: IEC 60364-4-44 2024

INTERNATIONAL ELECTROTECHNICAL COMMISSION

_____

LOW-VOLTAGE ELECTRICAL INSTALLATIONS –

Part 4-44: Protection for safety – Protection against voltage disturbances and electromagnetic disturbances

FOREWORD

1) The International Electrotechnical Commission (IEC) is a worldwide organization for standardization comprising all national electrotechnical committees (IEC National Committees). The object of IEC is to promote international co-operation on all questions concerning standardization in the electrical and electronic fields. To this end and in addition to other activities, IEC publishes International Standards, Technical Specifications, Technical Reports, Publicly Available Specifications (PAS) and Guides (hereafter referred to as "IEC Publication(s)"). Their preparation is entrusted to technical committees; any IEC National Committee interested in the subject dealt with may participate in this preparatory work. International, governmental and non-governmental organizations liaising with the IEC also participate in this preparation. IEC collaborates closely with the International Organization for Standardization (ISO) in accordance with conditions determined by agreement between the two organizations.
2) The formal decisions or agreements of IEC on technical matters express, as nearly as possible, an international consensus of opinion on the relevant subjects since each technical committee has representation from all interested IEC National Committees.
3) IEC Publications have the form of recommendations for international use and are accepted by IEC National Committees in that sense. While all reasonable efforts are made to ensure that the technical content of IEC Publications is accurate, IEC cannot be held responsible for the way in which they are used or for any misinterpretation by any end user.
4) In order to promote international uniformity, IEC National Committees undertake to apply IEC Publications transparently to the maximum extent possible in their national and regional publications. Any divergence between any IEC Publication and the corresponding national or regional publication shall be clearly indicated in the latter.
5) IEC itself does not provide any attestation of conformity. Independent certification bodies provide conformity assessment services and, in some areas, access to IEC marks of conformity. IEC is not responsible for any services carried out by independent certification bodies.
6) All users should ensure that they have the latest edition of this publication.
7) No liability shall attach to IEC or its directors, employees, servants or agents including individual experts and members of its technical committees and IEC National Committees for any personal injury, property damage or other damage of any nature whatsoever, whether direct or indirect, or for costs (including legal fees) and expenses arising out of the publication, use of, or reliance upon, this IEC Publication or any other IEC Publications.
8) Attention is drawn to the Normative references cited in this publication. Use of the referenced publications is indispensable for the correct application of this publication.
9) IEC draws attention to the possibility that the implementation of this document may involve the use of (a) patent(s). IEC takes no position concerning the evidence, validity or applicability of any claimed patent rights in respect thereof. As of the date of publication of this document, IEC had not received notice of (a) patent(s), which may be required to implement this document. However, implementers are cautioned that this may not represent the latest information, which may be obtained from the patent database available at https://patents.iec.ch. IEC shall not be held responsible for identifying any or all such patent rights.

IEC 60364-4-44 has been prepared by IEC technical committee 64: Electrical installations and protection against electric shock. It is an International Standard.

This third edition cancels and replaces the second edition published in 2007, Amendment 1:2015 and Amendment 2:2018. This edition constitutes a technical revision.

This edition includes the following significant technical changes with respect to the previous edition:

a) the structure of the document has been updated in accordance with the ISO/IEC Directives, Part 2:2021: the terms, definitions and symbols have been regrouped under a new Subclause 440.3, the tables and figures have been renumbered;

Documents
Document Sharing Hub

Full document details: IEC 60364-4-44 2024

b) Clause 443 has been amended to better introduce the DC SPD and to improve some of the wording.

The text of this International Standard is based on the following documents:

Draft	Report on voting
64/2696/FDIS	64/2737/RVD

Full information on the voting for its approval can be found in the report on voting indicated in the above table.

The language used for the development of this International Standard is English.

This document was drafted in accordance with ISO/IEC Directives, Part 2, and developed in accordance with ISO/IEC Directives, Part 1 and ISO/IEC Directives, IEC Supplement, available at www.iec.ch/members_experts/refdocs. The main document types developed by IEC are described in greater detail at www.iec.ch/publications.

A list of all parts in the IEC 60364 series, published under the general title *Low-voltage electrical installations,* can be found on the IEC website.

The reader's attention is drawn to the fact that Annex C lists all of the "in-some-country" clauses on differing practices of a less permanent nature relating to the subject of this document.

The committee has decided that the contents of this document will remain unchanged until the stability date indicated on the IEC website under webstore.iec.ch in the data related to the specific document. At this date, the document will be

- reconfirmed,
- withdrawn, or
- revised.

IMPORTANT – The "colour inside" logo on the cover page of this document indicates that it contains colours which are considered to be useful for the correct understanding of its contents. Users should therefore print this document using a colour printer.

Documents
Document Sharing Hub

Full document details: IEC 60364-4-44 2024

INTRODUCTION

This part of IEC 60364 covers the protection of electrical installations and measures against voltage disturbances and electromagnetic disturbances.

The requirements are arranged into four clauses as follows:

Clause 442	Protection of low-voltage installations against temporary overvoltages due to earth faults in the high-voltage system and due to faults in the low-voltage system
Clause 443	Protection against transient overvoltages of atmospheric origin or due to switching
Clause 444	Measures against electromagnetic influences
Clause 445	Protection against undervoltage

Documents
Document Sharing Hub
Full document details: IEC 60364-4-44 2024

LOW-VOLTAGE ELECTRICAL INSTALLATIONS –

Part 4-44: Protection for safety – Protection against voltage disturbances and electromagnetic disturbances

440 Protection against voltage disturbances and electromagnetic disturbances

440.1 Scope

This part of IEC 60364 provides requirements for the safety of electrical installations in the event of voltage disturbances and electromagnetic disturbances generated for different specified reasons.

The requirements of this document are not intended to apply to systems for distribution of energy to the public, or power generation and transmission for such systems (see the scope of IEC 60364-1) although such disturbances can be conducted into or between electrical installations via these supply systems.

440.2 Normative references

The following documents are referred to in the text in such a way that some or all of their content constitutes requirements of this document. For dated references, only the edition cited applies. For undated references, the latest edition of the referenced document (including any amendments) applies.

IEC 60364-1, *Low-voltage electrical installations – Part 1: Fundamental principles, assessment of general characteristics, definitions*

IEC 60364-5-52, *Low-voltage electrical installations – Part 5-52: Selection and erection of electrical equipment – Wiring systems*

IEC 60364-5-53:2019, *Low-voltage electrical installations – Part 5-53: Selection and erection of electrical equipment – Devices for protection for safety, isolation, switching, control and* monitoring
IEC 60364-5-53:2019/AMD1:2020
IEC 60364-5-53:2019/AMD2:2024

IEC 60364-5-54:2011, *Low-voltage electrical installations – Part 5-54: Selection and erection of electrical equipment – Earthing arrangements and protective* conductors
IEC 60364-5-54:2011/AMD1:2021

IEC 60664-1:2020, *Insulation coordination for equipment within low-voltage supply systems – Part 1: Principles, requirements and tests*

IEC 61156 (all parts), *Multicore and symmetrical pair/quad cables for digital communications*

IEC 61196-7, *Coaxial communication cables – Part 7: Sectional specification for cables for BCT cabling in accordance with ISO/IEC 11801-4 – Indoor drop cables for systems operating at 5 MHz – 6 000 MHz*

IEC 61936-1, *Power installations exceeding 1 kV AC and 1,5 kV DC – Part 1: AC*

Documents
Document Sharing Hub
Full document details: IEC 60364-4-44 2024

IEC 62305-3, *Protection against lightning – Part 3: Physical damage to structures and life hazard*

ISO/IEC 11801-1, *Information technology – Generic cabling for customer premises – Part 1: General requirements*

ISO/IEC 14763-2:2019, *Information technology – Implementation and operation of customer premises cabling – Part 2: Planning and installation*

ISO/IEC TR 29106, *Information technology – Generic cabling – Introduction to the MICE environmental classification*

440.3 Terms, definitions and symbols

440.3.1 Terms and definitions

For the purposes of this document, the terms and definitions given in IEC 60364-1 and the following apply.

ISO and IEC maintain terminology databases for use in standardization at the following addresses:

- IEC Electropedia: available at https://www.electropedia.org/
- ISO Online browsing platform: available at https://www.iso.org/obp

440.3.1.1
urban environment
area with a high density of buildings or densely populated communities with tall buildings

EXAMPLE Town centre.

440.3.1.2
suburban environment
area with a medium density of buildings

EXAMPLE Town outskirts.

440.3.1.3
rural environment
area with a low density of buildings

EXAMPLE The countryside.

440.3.1.4
surge protective device
SPD
device that contains at least one non-linear component that is intended to limit surge voltages and divert surge currents

Note 1 to entry: An SPD is a complete assembly, having appropriate connecting means.

[SOURCE: IEC 61643-11:2011, 3.1.1]

440.3.1.5
calculated risk level
CRL
calculated value of risk used to evaluate the need for transient overvoltage protection

Documents
Document Sharing Hub
Full document details: IEC 60364-4-44 2024

440.3.1.6
rated impulse voltage
U_W
value of the impulse withstand voltage assigned by the manufacturer to the equipment or to a part of it, characterizing the specified withstand capability of its insulation against transient overvoltages

[SOURCE: IEC 60664-1:2020, 3.1.19, modified – In the term, "withstand" has been deleted and the symbol U_{imp} has been replaced with U_W.]

440.3.1.7
bonding network
BN
set of interconnected conductive structures that provides an "electromagnetic shield" for electronic systems at frequencies from direct current (DC) to low radio frequency (RF)

Note 1 to entry: The term "electromagnetic shield" denotes any structure used to divert, block or impede the passage of electromagnetic energy. In general, a BN does not need to be connected to earth but BN considered in this standard are connected to earth.

440.3.1.8
bonding ring conductor
BRC
earthing bus conductor in the form of a closed ring

Note 1 to entry: Normally the bonding ring conductor, as part of the bonding network, has multiple connections to the CBN that improves its performance.

440.3.1.9
common equipotential bonding system
common bonding network
CBN
equipotential bonding system providing both protective-equipotential-bonding and functional-equipotential-bonding

[SOURCE: IEC 60050-195:2021, 195-02-25]

440.3.1.10
equipotential bonding
set of electric connections intended to achieve equipotentiality between conductive parts

[SOURCE: IEC 60050-195:2021, 195-01-10]

440.3.1.11
earth-electrode network
ground-electrode network (US)
part of an earthing arrangement comprising only the earth electrodes and their interconnections

[SOURCE: IEC 60050-195:2021, 195-02-21]

440.3.1.12
meshed bonding network
MESH-BN
bonding network in which all associated equipment frames, racks and cabinets and usually the DC power return conductor, are bonded together as well as at multiple points to the CBN and may have the form of a mesh

Note 1 to entry: The MESH-BN augments the CBN.

Documents
Document Sharing Hub
Full document details: IEC 60364-4-44 2024

440.3.1.13
by-pass equipotential bonding conductor
parallel earthing conductor
PEC
earthing conductor connected in parallel with the screens of signal or data cables in order to limit the current flowing through the screens

440.3.2 Symbols

In this document, the following symbols are used (see Figure 1).

I_E part of the earth fault current in the high-voltage system that flows through the earthing arrangement of the transformer substation

R_E resistance of the earthing arrangement of the transformer substation

R_A resistance of the earthing arrangement of the exposed-conductive-parts of the equipment of the low-voltage installation

R_B resistance of the earthing arrangement of the low-voltage system neutral, for low-voltage systems in which the earthing arrangements of the transformer substation and of the low-voltage system neutral are electrically independent

U_o in TN- and TT-systems: nominal AC RMS line voltage to earth

in IT-systems: nominal AC voltage between line conductor and neutral conductor or mid-point conductor, as appropriate

U_f power-frequency fault voltage that appears in the low-voltage system between exposed-conductive-parts and earth for the duration of the fault

U_1 power-frequency stress voltage between the line conductor and the exposed-conductive-parts of the low-voltage equipment of the transformer substation during the fault

U_2 power-frequency stress voltage between the line conductor and the exposed-conductive-parts of the low-voltage equipment of the low-voltage installation during the fault

NOTE 1 The power-frequency stress voltage (U_1 and U_2) is the voltage that appears across the insulation of low-voltage equipment and across surge protective devices connected to the low-voltage system.

The following additional symbols are used in respect of IT-systems in which the exposed-conductive-parts of the equipment of the low-voltage installation are connected to an earthing arrangement that is electrically independent of the earthing arrangement of the transformer substation.

I_h fault current that flows through the earthing arrangement of the exposed-conductive-parts of the equipment of the low-voltage installation during a period when there is a high-voltage fault and a first fault in the low-voltage installation (see Table 1).

I_d fault current that flows through the earthing arrangement of the exposed-conductive-parts of the low-voltage installation during the first fault in a low-voltage system (see Table 1).

Z impedance (e.g. IMD internal impedance, artificial neutral impedance) between the low-voltage system and an earthing arrangement.

NOTE 2 An earthing arrangement can be considered electrically independent of another earthing arrangement if a rise of potential with respect to earth in one earthing arrangement does not cause an unacceptable rise of potential with respect to earth in the other earthing arrangement. See IEC 61936-1.

Documents
Document Sharing Hub
Full document details: IEC 60364-4-44 2024

441 Void

442 Protection of low-voltage installations against temporary overvoltages due to earth faults in the high-voltage system and due to faults in the low-voltage system

442.1 Field of application

442.1.1 General

This Clause 442 provides requirements for the safety of low-voltage installation in the event of

– a fault between the high-voltage system and earth in the transformer substation that supplies the low-voltage installation,
– a loss of the supply neutral in the low-voltage system,
– a short-circuit between a line conductor and neutral,
– an accidental earthing of a line conductor of a low-voltage IT-system.

The requirements for the earthing arrangement at the transformer substation are given in IEC 61936-1.

442.1.2 General requirements

As Clause 442 covers faults between a high-voltage line and the earth in the HV/LV substation, it gives rules for the designer and installer of the substation. It is necessary to have the following information concerning the high-voltage system:

– quality of the system earthing;
– maximum level of earth fault current;
– resistance of the earthing arrangement.

The following Subclauses 442.2, 442.3, 442.4 and 442.5 consider four situations as proposed in 442.1, which generally cause the most severe temporary overvoltages such as defined in IEC 60050-614:

– fault between the high-voltage system(s) and earth (see 442.2);
– loss of the neutral in a low-voltage system (see 442.3);
– accidental earthing of a low-voltage IT system (see 442.4);
– short-circuit in the low-voltage installation (see 442.5).

442.2 Overvoltages in LV-systems during a high-voltage earth fault

442.2.1 General

In case of a fault to earth on the HV-side of the substation, the following types of overvoltage may affect the LV-installation:

- power-frequency fault voltage (U_f);
- power-frequency stress voltages (U_1 and U_2).

Table 1 provides the relevant methods of calculation for the different types of overvoltages.

Table 1 deals with IT systems with a neutral point only. For IT systems with no neutral point, the formulae should be adjusted accordingly.

Documents
Document Sharing Hub
Full document details: IEC 60364-4-44 2024

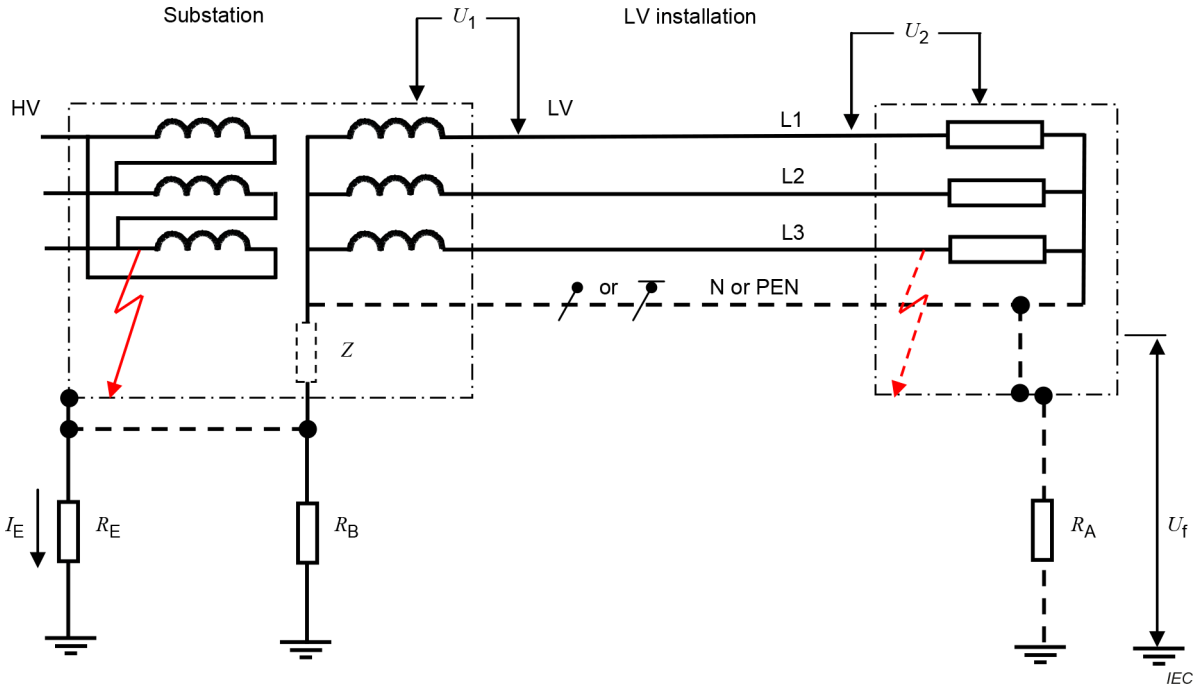

Figure 1 – Representative schematic diagram for possible connections to earth in substation and LV-installation and occurring overvoltages in case of faults

Where high- and low-voltage earthing systems exist in proximity to each other, two practices are presently used:

– interconnection of all high-voltage (R_E) and low-voltage (R_B) earthing systems;

– separation of high-voltage (R_E) from low-voltage (R_B) earthing systems.

The general method used is interconnection. The high- and low-voltage earthing systems shall be interconnected if the low-voltage system is totally confined within the area covered by the high-voltage earthing system (see IEC 61936-1).

NOTE 1 Details of the different types of system earthing (TN, TT, IT) are shown in IEC 60364-1.

Documents
Document Sharing Hub
Full document details: IEC 60364-4-44 2024

Table 1 – Power-frequency stress voltages and power-frequency fault voltage in low-voltage system

Types of system earthing	Types of earth connections	U_1	U_2	U_f
TT	R_E and R_B connected	U_o [a]	$R_E \times I_E + U_o$	0 [a]
	R_E and R_B separated	$R_E \times I_E + U_o$	U_o [a]	0 [a]
TN	R_E and R_B connected	U_o [a]	U_o [a]	$R_E \times I_E$ [b]
	R_E and R_B separated	$R_E \times I_E + U_o$	U_o [a]	0 [a]
IT	R_E and Z connected R_E and R_A separated	U_o [a]	$R_E \times I_E + U_o$	0 [a]
		$U_o \times \sqrt{3}$	$R_E \times I_E + U_o \times \sqrt{3}$	$R_A \times I_h$
	R_E and Z connected R_E and R_A interconnected	U_o [a]	U_o [a]	$R_E \times I_E$
		$U_o \times \sqrt{3}$	$U_o \times \sqrt{3}$	$R_E \times I_E$
	R_E and Z separated R_E and R_A separated	$R_E \times I_E + U_o$	U_o [a]	0 [a]
		$R_E \times I_E + U_o \times \sqrt{3}$	$U_o \times \sqrt{3}$	$R_A \times I_d$

Key

With existing earth fault in the installation.

[a] No consideration shall be given.

[b] See 442.2.2 second paragraph.

NOTE 2 The requirements for U_1 and U_2 are derived from design criteria for insulation of low-voltage equipment with regard to temporary power-frequency overvoltage (see also Table 2).

NOTE 3 In a system whose neutral is connected to the earthing arrangement of the transformer substation, such temporary power-frequency overvoltage is also expected across insulation which is not in an earthed enclosure when the equipment is outside a building.

NOTE 4 In TT- and TN-systems the statement "connected" and "separated" refers to the electrical connection between R_E and R_B. For IT-systems it refers to the electrical connection between R_E and Z and the connection between R_E and R_A.

442.2.2 Magnitude and duration of power-frequency fault voltage

The magnitude and the duration of the fault voltage U_f (as calculated in Table 1) which appears in the LV installation between exposed-conductive-parts and earth, shall not exceed the values given for U_f by the curve of Figure 2 for the duration of the fault.

Normally, the PEN conductor of the low-voltage system is connected to earth at more than one point. In this case, the total resistance is reduced. For these multiple grounded PEN conductors, U_f can be calculated as:

$$U_f = 0{,}5\ R_E \times I_E$$

Documents
Document Sharing Hub
Full document details: IEC 60364-4-44 2024

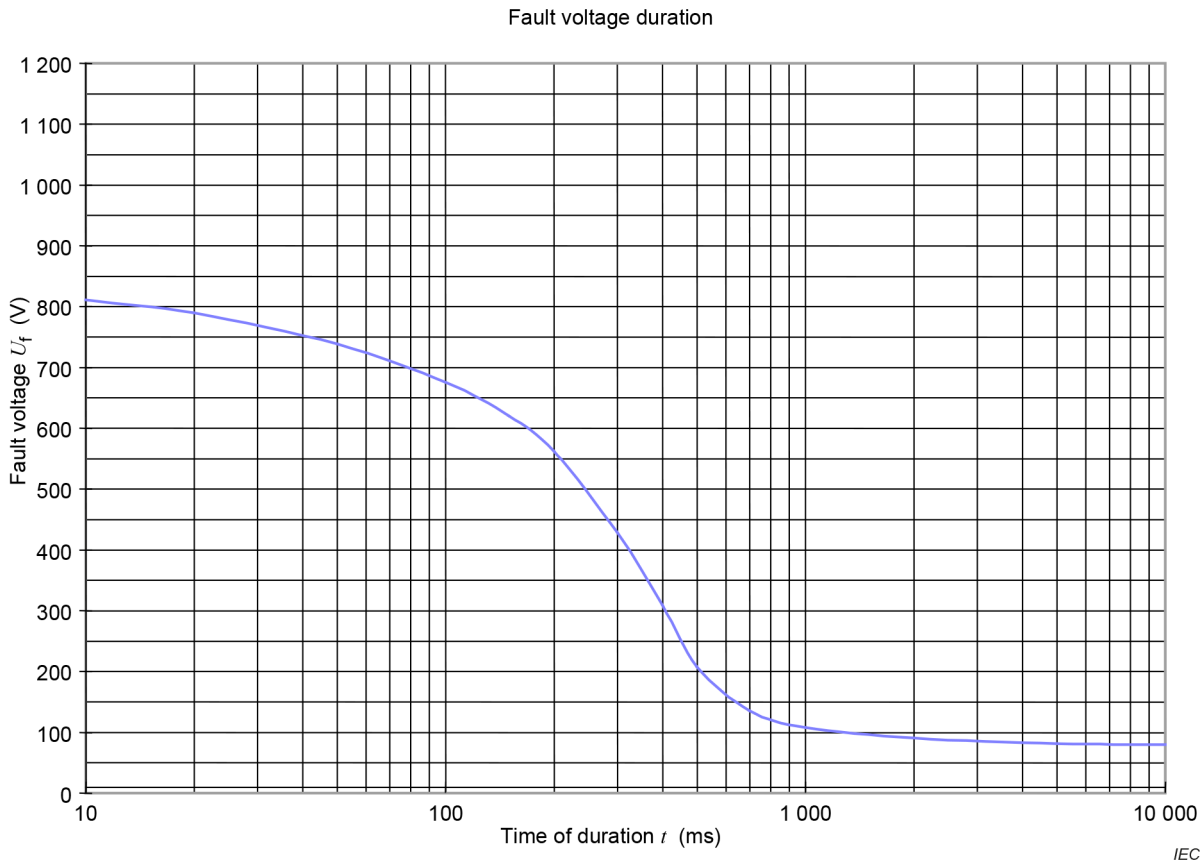

NOTE On the basis of probabilistic and statistical evidence this curve represents a low level of risk for the simple worst case where the low-voltage system neutral conductor is earthed only at the transformer substation earthing arrangements. Guidance is provided in IEC 61936-1 concerning other situations.

SOURCE: IEC 61936-1:2021, Figure 12

Figure 2 – Tolerable fault voltage due to an earth-fault in the HV system

442.2.3 Magnitude and duration of power-frequency stress voltages

The magnitude and the duration of the power-frequency stress voltage (U_1 and U_2) as calculated in Table 1 of the low-voltage equipment in the low-voltage installation due to an earth fault in the high-voltage system shall not exceed the requirements given in Table 2.

Documents
Document Sharing Hub
Full document details: IEC 60364-4-44 2024

Table 2 – Permissible power-frequency stress voltage

Duration of the earth fault in the high-voltage system t	Permissible power-frequency stress voltage on equipment in low-voltage installations U
> 5 s	U_o + 250 V
≤ 5 s	U_o + 1 200 V
In systems without a neutral conductor, U_o shall be the line-to-line voltage.	
NOTE 1 The first line of the table relates to high-voltage systems having long disconnection times, for example, isolated neutral and resonant earthed high-voltage systems. The second line relates to high-voltage systems having short disconnection times, for example low-impedance earthed high-voltage systems. Both lines together are relevant design criteria for insulation of low-voltage equipment with regard to temporary power frequency overvoltage, see IEC 60664-1. NOTE 2 In a system whose neutral is connected to the earthing arrangement of the transformer substation, such temporary power-frequency overvoltage is also expected across insulation which is not in an earthed enclosure when the equipment is outside a building.	

442.2.4 Requirements for calculation of limits

Where required by Table 1, the permissible power-frequency stress voltage shall not exceed the value given in Table 2.

Where required by Table 1, the permissible power-frequency fault voltage shall not exceed the value given in Figure 2.

The requirements of 442.2.2 and 442.2.3 are deemed to be fulfilled for installations receiving a supply at low-voltage from a public electricity distribution system.

To fulfil the above requirements, coordination between the HV-system operator and the LV-system installer is necessary. Compliance with the above requirements mainly falls into the responsibility of the substation installer, owner, operator for whom it is also necessary to fulfil requirements provided by IEC 61936-1. Therefore the calculation for U_1, U_2 and U_f is normally not necessary for the LV system installer.

Possible measures to fulfil the above requirements are for example:

- separation of earthing arrangement between HV and LV;
- change of LV system earthing;
- reduction of earth resistance R_E.

442.3 Power-frequency stress voltage in case of loss of the neutral conductor in a TN and TT system

Consideration shall be given to the fact that, if the neutral conductor in a multi-phase system is interrupted, basic, double and reinforced insulation as well as components rated for the voltage between line and neutral conductors can be temporarily stressed with the line-to-line voltage. The stress voltage can reach up to $U = \sqrt{3}\ U_o$.

442.4 Power-frequency stress voltage in the event of an earth fault in an IT system with distributed neutral

Consideration shall be given to the fact that, if a line conductor of an IT system is earthed accidentally, insulation or components rated for the voltage between line and neutral conductors can be temporarily stressed with the line-to-line voltage. The stress voltage can reach up to $U = \sqrt{3}\ U_o$.

AVA Documents Document Sharing Hub

Full document details: IEC 60364-4-44 2024

442.5 Power-frequency stress voltage in the event of a short-circuit between a line conductor and the neutral conductor

Consideration shall be given to the fact that if a short-circuit occurs in the low-voltage installation between a phase conductor and the neutral conductor, the voltage between the other line conductors and the neutral conductor can reach the value of 1,45 × U_0 for a time up to 5 s.

443 Protection against transient overvoltages of atmospheric origin or due to switching

443.1 General

Clause 443 specifies requirements for protection of electrical installations against transient overvoltages of atmospheric origin transmitted by the supply distribution system including direct strikes to the supply system and against switching overvoltages. Clause 443 does not specify requirements for protection against transient overvoltage due to direct or nearby lightning strokes on the structure.

NOTE 1 For risk management for protection against transient overvoltage due to direct or nearby lightning strokes on the structure, see IEC 62305-2.

In general, switching overvoltages have lower amplitude than transient overvoltages of atmospheric origin and therefore the requirements regarding protection against transient overvoltages of atmospheric origin normally cover protection against switching overvoltages.

If no transient overvoltage protection against disturbances of atmospheric origin is installed, it can be necessary for protection against switching overvoltages to be provided.

NOTE 2 Overvoltages due to switching can be longer in duration and can contain more energy than the transient overvoltages of atmospheric origin. See 443.4.

The characteristics of transient overvoltages of atmospheric origin depend on factors such as:

– the nature of the supply distribution system (underground or overhead);
– the possible existence of at least one surge protective device (SPD) upstream of the origin of the installation;
– the voltage level of the supply system.

NOTE 3 As regards transient overvoltages of atmospheric origin, no distinction is made between earthed and unearthed systems.

Protection against transient overvoltages is provided by the installation of surge protective devices (SPDs).

Selection and installation of SPDs shall be in compliance with IEC 60364-5-53:2019, Clause 534 and IEC 60364-5-53:2019/AMD2:2024, Clause 534.

If there is a need for SPDs on the power supply lines, additional SPDs on other lines such as telecom lines are also recommended.

Requirements for protection against transient overvoltages transmitted by data transmission systems are not covered by Clause 443. See IEC 61643-22.

Documents
Document Sharing Hub
Full document details: IEC 60364-4-44 2024