IEC 60364-7-701

Edition 3.0 2019-10

INTERNATIONAL STANDARD

NORME INTERNATIONALE

Low-voltage electrical installations – Part 7-701: Requirements for special installations or locations – Locations containing a bath or shower

Installations électriques à basse tension – Partie 7-701: Exigences pour les installations et emplacements spéciaux – Emplacements contenant une baignoire ou une douche

IEC 60364-7-701:2019-10(en-fr)

Documents
Document Sharing Hub

Full document details: IEC 60364-7-701-2019

THIS PUBLICATION IS COPYRIGHT PROTECTED
Copyright © 2019 IEC, Geneva, Switzerland

All rights reserved. Unless otherwise specified, no part of this publication may be reproduced or utilized in any form or by any means, electronic or mechanical, including photocopying and microfilm, without permission in writing from either IEC or IEC's member National Committee in the country of the requester. If you have any questions about IEC copyright or have an enquiry about obtaining additional rights to this publication, please contact the address below or your local IEC member National Committee for further information.

Droits de reproduction réservés. Sauf indication contraire, aucune partie de cette publication ne peut être reproduite ni utilisée sous quelque forme que ce soit et par aucun procédé, électronique ou mécanique, y compris la photocopie et les microfilms, sans l'accord écrit de l'IEC ou du Comité national de l'IEC du pays du demandeur. Si vous avez des questions sur le copyright de l'IEC ou si vous désirez obtenir des droits supplémentaires sur cette publication, utilisez les coordonnées ci-après ou contactez le Comité national de l'IEC de votre pays de résidence.

IEC Central Office
3, rue de Varembé
CH-1211 Geneva 20
Switzerland

Tel.: +41 22 919 02 11
info@iec.ch
www.iec.ch

About the IEC
The International Electrotechnical Commission (IEC) is the leading global organization that prepares and publishes International Standards for all electrical, electronic and related technologies.

About IEC publications
The technical content of IEC publications is kept under constant review by the IEC. Please make sure that you have the latest edition, a corrigendum or an amendment might have been published.

IEC publications search - webstore.iec.ch/advsearchform
The advanced search enables to find IEC publications by a variety of criteria (reference number, text, technical committee,…). It also gives information on projects, replaced and withdrawn publications.

IEC Just Published - webstore.iec.ch/justpublished
Stay up to date on all new IEC publications. Just Published details all new publications released. Available online and once a month by email.

IEC Customer Service Centre - webstore.iec.ch/csc
If you wish to give us your feedback on this publication or need further assistance, please contact the Customer Service Centre: sales@iec.ch.

Electropedia - www.electropedia.org
The world's leading online dictionary on electrotechnology, containing more than 22 000 terminological entries in English and French, with equivalent terms in 16 additional languages. Also known as the International Electrotechnical Vocabulary (IEV) online.

IEC Glossary - std.iec.ch/glossary
67 000 electrotechnical terminology entries in English and French extracted from the Terms and Definitions clause of IEC publications issued since 2002. Some entries have been collected from earlier publications of IEC TC 37, 77, 86 and CISPR.

A propos de l'IEC
La Commission Electrotechnique Internationale (IEC) est la première organisation mondiale qui élabore et publie des Normes internationales pour tout ce qui a trait à l'électricité, à l'électronique et aux technologies apparentées.

A propos des publications IEC
Le contenu technique des publications IEC est constamment revu. Veuillez vous assurer que vous possédez l'édition la plus récente, un corrigendum ou amendement peut avoir été publié.

Recherche de publications IEC - webstore.iec.ch/advsearchform
La recherche avancée permet de trouver des publications IEC en utilisant différents critères (numéro de référence, texte, comité d'études,…). Elle donne aussi des informations sur les projets et les publications remplacées ou retirées.

IEC Just Published - webstore.iec.ch/justpublished
Restez informé sur les nouvelles publications IEC. Just Published détaille les nouvelles publications parues. Disponible en ligne et une fois par mois par email.

Service Clients - webstore.iec.ch/csc
Si vous désirez nous donner des commentaires sur cette publication ou si vous avez des questions contactez-nous: sales@iec.ch.

Electropedia - www.electropedia.org
Le premier dictionnaire d'électrotechnologie en ligne au monde, avec plus de 22 000 articles terminologiques en anglais et en français, ainsi que les termes équivalents dans 16 langues additionnelles. Egalement appelé Vocabulaire Electrotechnique International (IEV) en ligne.

Glossaire IEC - std.iec.ch/glossary
67 000 entrées terminologiques électrotechniques, en anglais et en français, extraites des articles Termes et Définitions des publications IEC parues depuis 2002. Plus certaines entrées antérieures extraites des publications des CE 37, 77, 86 et CISPR de l'IEC.

Documents
Document Sharing Hub

Full document details: IEC 60364-7-701-2019

IEC 60364-7-701

Edition 3.0 2019-10

INTERNATIONAL STANDARD

NORME INTERNATIONALE

Low-voltage electrical installations – Part 7-701: Requirements for special installations or locations – Locations containing a bath or shower

Installations électriques à basse tension – Partie 7-701: Exigences pour les installations et emplacements spéciaux – Emplacements contenant une baignoire ou une douche

INTERNATIONAL
ELECTROTECHNICAL
COMMISSION

COMMISSION
ELECTROTECHNIQUE
INTERNATIONALE

ICS 29.020; 91.140.50

ISBN 978-2-8322-7414-9

Warning! Make sure that you obtained this publication from an authorized distributor.
Attention! Veuillez vous assurer que vous avez obtenu cette publication via un distributeur agréé.

® Registered trademark of the International Electrotechnical Commission
Marque déposée de la Commission Electrotechnique Internationale

AVA Documents
Document Sharing Hub

Full document details: IEC 60364-7-701-2019

CONTENTS

FOREWORD 3
INTRODUCTION 5
701 Locations containing a bath or shower 6
701.1 Scope 6
701.2 Normative references 6
701.3 Terms and definitions 6
701.30 Assessment of general characteristics 7
701.4 Protection for safety 8
701.41 Protection against electric shock 8
701.411 Protective measure: automatic disconnection of supply 9
701.414 Protective measure: extra-low-voltage provided by SELV and PELV 9
701.415 Additional protection 9
701.5 Selection and erection of electrical equipment 10
701.51 Common rules 10
701.512 Operational conditions and external influences 10
701.52 Wiring systems 11
701.522 Selection and erection of wiring systems in relation to external influences 11
701.53 Devices for protection for safety, isolation, switching, control and monitoring 12
701.531 Devices for protection against indirect contact by automatic disconnection of supply 12
Annex A (informative) List of notes concerning certain countries 21
Bibliography 27

Figure 1 – Remaining wall thickness behind zones 12
Figure 2 – Dimensions of zones: side view of a bath tub 13
Figure 3 – Dimensions of zones: top view of a bath tub without partition 14
Figure 4 – Dimensions of zones: top view of a bath tub with fixed partition 15
Figure 5 – Dimensions of zones 0 and 1: side view of a shower 16
Figure 6 – Dimensions of zones 0 and 1: side view of a shower with fixed partition 17
Figure 7 – Dimensions of zones 0 and 1: top view of a shower with fixed water outlet close to a corner 18
Figure 8 – Dimensions of zones 0 and 1: top view of a shower with fixed water outlet at a distance from a corner 18
Figure 9 – Dimensions of zones 0 and 1: top view of a shower with a fixed partition 19
Figure 10 – Example of zone for shower with doors 20
Figure 11 – Dimensions of zones in locations containing a shower with a basin 26

Documents
Document Sharing Hub
Full document details: IEC 60364-7-701-2019

INTERNATIONAL ELECTROTECHNICAL COMMISSION

LOW-VOLTAGE ELECTRICAL INSTALLATIONS –

Part 7-701: Requirements for special installations or locations – Locations containing a bath or shower

FOREWORD

1) The International Electrotechnical Commission (IEC) is a worldwide organization for standardization comprising all national electrotechnical committees (IEC National Committees). The object of IEC is to promote international co-operation on all questions concerning standardization in the electrical and electronic fields. To this end and in addition to other activities, IEC publishes International Standards, Technical Specifications, Technical Reports, Publicly Available Specifications (PAS) and Guides (hereafter referred to as "IEC Publication(s)"). Their preparation is entrusted to technical committees; any IEC National Committee interested in the subject dealt with may participate in this preparatory work. International, governmental and non-governmental organizations liaising with the IEC also participate in this preparation. IEC collaborates closely with the International Organization for Standardization (ISO) in accordance with conditions determined by agreement between the two organizations.
2) The formal decisions or agreements of IEC on technical matters express, as nearly as possible, an international consensus of opinion on the relevant subjects since each technical committee has representation from all interested IEC National Committees.
3) IEC Publications have the form of recommendations for international use and are accepted by IEC National Committees in that sense. While all reasonable efforts are made to ensure that the technical content of IEC Publications is accurate, IEC cannot be held responsible for the way in which they are used or for any misinterpretation by any end user.
4) In order to promote international uniformity, IEC National Committees undertake to apply IEC Publications transparently to the maximum extent possible in their national and regional publications. Any divergence between any IEC Publication and the corresponding national or regional publication shall be clearly indicated in the latter.
5) IEC itself does not provide any attestation of conformity. Independent certification bodies provide conformity assessment services and, in some areas, access to IEC marks of conformity. IEC is not responsible for any services carried out by independent certification bodies.
6) All users should ensure that they have the latest edition of this publication.
7) No liability shall attach to IEC or its directors, employees, servants or agents including individual experts and members of its technical committees and IEC National Committees for any personal injury, property damage or other damage of any nature whatsoever, whether direct or indirect, or for costs (including legal fees) and expenses arising out of the publication, use of, or reliance upon, this IEC Publication or any other IEC Publications.
8) Attention is drawn to the Normative references cited in this publication. Use of the referenced publications is indispensable for the correct application of this publication.
9) Attention is drawn to the possibility that some of the elements of this IEC Publication may be the subject of patent rights. IEC shall not be held responsible for identifying any or all such patent rights.

International Standard IEC 60364-7-701 has been prepared by IEC technical committee 64: Electrical installations and protection against electric shock.

This third edition cancels and replaces the second edition published in 2006. This edition constitutes a technical revision.

This edition includes the following significant technical changes with respect to the previous edition:

– the scope gives precisions relevant to the application of this document;
– the description of zones is improved;
– relevant terms are defined.

Documents
Document Sharing Hub
Full document details: IEC 60364-7-701-2019

The text of this International Standard is based on the following documents:

FDIS	Report on voting
64/2382/FDIS	64/2395/RVD

Full information on the voting for the approval of this International Standard can be found in the report on voting indicated in the above table.

This document has been drafted in accordance with the ISO/IEC Directives, Part 2.

A list of all parts in the IEC 60364 series, published under the general title *Low voltage electrical installations* can be found on the IEC website.

The reader's attention is drawn to the fact that Annex A lists all of the “in-some-country” clauses on differing practices of a less permanent nature relating to the subject of this document.

The committee has decided that the contents of this document will remain unchanged until the stability date indicated on the IEC website under "http://webstore.iec.ch" in the data related to the specific document. At this date, the document will be

- reconfirmed,
- withdrawn,
- replaced by a revised edition, or
- amended.

Documents
Document Sharing Hub

Full document details: IEC 60364-7-701-2019

INTRODUCTION

For the purpose of this part of IEC 60364 (IEC 60364-7-701) the requirements of the general Parts 1 to 6 and Parts 8 of IEC 60364 apply.

The IEC 60364-7-7XX parts of IEC 60364 contain particular requirements for special installations or locations which are based on the requirements of the general parts of IEC 60364 (IEC 60364-1 to IEC 60364-6 and IEC 60364-8). These IEC 60364-7-7XX parts are considered in conjunction with the requirements of the general parts.

The particular requirements of this part of IEC 60364 supplement, modify or replace certain of the requirements of the general parts of IEC 60364 being valid at the time of publication of this part. The absence of reference to the exclusion of a part or a clause of a general part means that the corresponding clauses of the general part are applicable (undated reference).

Requirements of other 7XX parts being relevant for installations covered by this part also apply. This part may therefore also supplement, modify or replace certain of these requirements valid at the time of publication of this part.

The clause numbering of this part follows the pattern and corresponding references of IEC 60364. The numbers following the particular number of this part are those of the corresponding parts, or clauses of the other parts of the IEC 60364 series, valid at the time of publication of this part, as indicated in the normative references of this document (dated reference).

If requirements or explanations additional to those of the other parts of the IEC 60364 series are needed, the numbering of such items appears as 701.101, 701.102, 701.103, etc.

In the case where new or amended general parts with modified numbering were published after this part was issued, the clause numbers referring to a general part in this Part 701 may no longer align with the latest edition of the general part. Dated references should be observed.

Documents
Document Sharing Hub

Full document details: IEC 60364-7-701-2019

LOW-VOLTAGE ELECTRICAL INSTALLATIONS –

Part 7-701: Requirements for special installations or locations – Locations containing a bath or shower

701 Locations containing a bath or shower

701.1 Scope

The particular requirements of this part of IEC 60364 apply to electrical installations in indoor or outdoor locations where a bath tub and/or a shower is intended to be permanently placed in a specific location.

The extent of the location containing a bath tub and/or a shower is limited by:

– the lowest finished floor level;
– a horizontal plane 3 m above the lowest finished floor level;
– a vertical circumscribing virtual surface at a distance of 4 m from the fixed water outlet for the bath tub or shower; and
– the volume within the walls, floor and ceiling that border the location containing a bath or shower, measured to a depth of 6 cm.

NOTE 1 Where the shower head and flexible hose are detachable, the fixed water outlet is taken to be at the supply end of the flexible hose.

The requirements of this document also apply to fixed electrical installations in mobile applications, for example caravans, mobile homes, shower containers. This document does not apply to emergency facilities, for example emergency showers used in industrial areas or laboratories.

NOTE 2 For locations containing a bath or shower for medical treatment, special requirements can be necessary.

NOTE 3 For prefabricated bath and/or shower units, see also IEC 60335-2-105.

701.2 Normative references

The following documents are referred to in the text in such a way that some or all of their content constitutes requirements of this document. For dated references, only the edition cited applies. For undated references, the latest edition of the referenced document (including any amendments) applies.

IEC 60364-4-41:2005, *Low-voltage electrical installations – Part 4-41: Protection for safety – Protection against electric shock*
IEC 60364-4-41:2005/AMD1:2017

701.3 Terms and definitions

For the purposes of this document, the following terms and definitions apply.

ISO and IEC maintain terminological databases for use in standardization at the following addresses:

- IEC Electropedia: available at http://www.electropedia.org/
- ISO Online browsing platform: available at http://www.iso.org/obp

Documents
Document Sharing Hub

Full document details: IEC 60364-7-701-2019

701.3.1
location
particular place or position

EXAMPLE A dedicated room, an area of a room (e.g. area in a loft), an outdoor area.

701.3.2
bath tub
basin for the total or substantial immersion of the human body in water, which is intended to be drained after every use

701.3.3
shower
defined place intended for personal cleaning activity under a spray of water without intentional retention of the water

701.3.4
fixed partition
solid barrier or enclosure, including any integrated doors, with some portion attached to the building structure that will deflect water directed against its surface

Note 1 to entry: Integrated doors are considered to be closed.

Note 2 to entry: A curtain is not a fixed partition.

701.30 Assessment of general characteristics

701.30.101 General

When applying this document, the zones specified in 701.30.102, 701.30.103, and 701.30.104 shall be taken into account. For fixed prefabricated bath or shower units, the zones are applied to the situation when the bath or shower basin is in its intended configuration.

Fixed partitions including horizontal or inclined ceilings, walls with or without windows, doors, floors, may limit the extent of locations containing a bath or shower as well as their zones. Where the dimensions of fixed partitions are smaller than the dimensions of the relevant zones, for example partitions having a height lower than 225 cm, the minimum distance in horizontal and vertical direction shall be taken into account (see Figure 2 to Figure 9).

Shower curtains or equivalent flexible material shall not be used for limiting the zones.

Where a shower is located in zone 1 of a bath tub, the zones for a bath tub apply.

Where for showers there is more than one fixed water outlet, the limit of the zones to be considered are those given by the combination of the zones.

701.30.102 Description of zone 0

Zone 0 is limited:

a) by the interior of a bath tub, see Figure 2 to Figure 4;
b) for showers:
   – from the lowest finished floor level up to a horizontal plane at the height of 10 cm above; and
   – by a vertical circumscribing virtual surface at a distance of 120 cm from the centre of the fixed shower head(s) and/or water outlet(s) limited by fixed partitions restricting the water to enter into the area on the other side of the partition (see Figure 5, Figure 6, Figure 7, Figure 8 and Figure 9).

Documents
Document Sharing Hub
Full document details: IEC 60364-7-701-2019

– Shower doors intended to be closed when taking a shower are delimiting the zone 0, (see Figure 10).

701.30.103 Description of zone 1

Zone 1 is limited:

a) for a bath tub by:
   – the floor level below the bath tub;
   – a horizontal plane lying 225 cm above the floor level below the bath tub or a horizontal plane corresponding to the highest fixed shower head, if any, or fixed water outlet, whichever is higher;
   – the vertical virtual surface circumscribing the bath tub (see Figure 2 to Figure 4); and
   – excluding zone 0;

b) for showers by:
   – the lowest finished floor level;
   – a horizontal plane corresponding to the highest fixed shower head or fixed water outlet or the horizontal plane lying 225 cm above the lowest finished floor level, whichever is higher;
   – the vertical circumscribing virtual surface at a distance of 120 cm from the centre of the fixed shower head(s) and/or fixed water outlet(s) limited by fixed partitions restricting the water to enter into the area on the other side of the partition;
   – shower doors intended to be closed when taking a shower, if any, see Figure 10; and
   – excluding zone 0.

701.30.104 Description of zone 2

Zone 2 is limited:

a) for a bath tub by:
   – the finished floor level;
   – the horizontal plane corresponding to the highest fixed shower head or fixed water outlet or the horizontal plane lying 225 cm above the finished floor level, whichever is higher; and
   – the vertical virtual surface at the boundary of zone 1 and the parallel vertical virtual surface at a distance of 60 cm from the zone 1 border (see Figure 2 to Figure 4);

b) for showers, there is no zone 2. (see Figure 5 to Figure 10).

701.4 Protection for safety

701.41 Protection against electric shock

701.410.3 General requirements

701.410.3.4

Replace the existing text by the following:

The protective measure electrical separation shall only be used for:

– circuits supplying one item of current-using equipment; or
– one single socket-outlet.

The protective measure electrical separation for the supply shall not be applied for heating cables and embedded heating systems.

Documents
Document Sharing Hub

Full document details: IEC 60364-7-701-2019

701.410.3.5

Replace the existing text by the following:

The protective measures of obstacles and placing out of reach, as specified in IEC 60364-4-41:2005, Annex B shall not be applied.

701.410.3.6

Replace the existing text by the following:

The protective measures of non-conducting location, earth-free local equipotential bonding and electrical separation for the supply of more than one item of current-using equipment, as specified in IEC 60364-4-41:2005 and IEC 60364-4-41:2005/AMD1:2017, Annex C shall not be applied.

701.411 Protective measure: automatic disconnection of supply

701.411.3 Requirements for fault protection

701.411.3.1 Protective earthing and protective equipotential bonding

701.411.3.1.101

If no protective equipotential bonding in accordance with IEC 60364-4-41:2005 and IEC 60364-4-41:2005/AMD1:2017, 411.3.1.2 exists, supplementary protective equipotential bonding in accordance with IEC 60364-4-41:2005 and IEC 60364-4-41:2005/AMD1:2017, 415.2 shall be installed within the location.

701.414 Protective measure: extra-low-voltage provided by SELV and PELV

701.414.1 General

701.414.1.101

All electrical equipment installed in zones 0 and 1 shall have basic insulation capable of withstanding a test voltage of 500 V AC RMS for 1 min.

All electrical equipment installed in a zone 2 shall have:

- basic insulation capable of withstanding a test voltage of 500 V AC RMS for 1 min; or
- enclosures affording a degree of protection of at least IPXXB or IP2X.

701.415 Additional protection

701.415.1 Additional protection: residual current protective devices (RCDs)

701.415.1.101

Except for circuits with protective measures “SELV or PELV” or “protection by electrical separation”, additional protection by the use of one or more RCDs having a rated residual operating current not exceeding 30 mA shall be provided for:

- circuits serving the location containing a bath tub and/or a shower;
- circuits passing through zone 1 and/or zone 2 not serving this location.

Documents
Document Sharing Hub
Full document details: IEC 60364-7-701-2019

701.5 Selection and erection of electrical equipment

701.51 Common rules

701.512 Operational conditions and external influences

701.512.2 External influences

701.512.2.4.101 Erection of equipment according to external influences

701.512.2.4.101.1 General

Electrical equipment that is likely to be exposed to water jets (e.g. for cleaning purposes) shall have a degree of protection at least IPX5. A higher degree of protection shall be considered if more severe conditions are expected.

Where electrical equipment extends in more than one zone, the requirements of the zone with the most onerous requirements apply.

EXAMPLE For a luminaire extending from zone 1 to zone 2, the requirements of zone 1 apply.

For flush mounted electrical equipment in parts of walls, floor or ceilings limiting a zone, the requirements of that zone apply.

701.512.2.4.101.2 Zone 0

Only fixed current using equipment may be erected provided that the equipment:

– complies with the relevant standard and is suitable for use in that zone according to the manufacturer's instructions for use and mounting;
– is permanently connected;
– is protected by SELV with a rated voltage not exceeding 12 V AC or 30 V DC, with the source of supply installed outside of zones 0 and 1; and
– has a degree of protection at least IPX7.

701.512.2.4.101.3 Zone 1

Only the following equipment may be erected:

a) current-using equipment protected by SELV or PELV with a rated voltage not exceeding 25 V AC or 60 V DC, with the source of supply installed outside zones 0 and 1; or
b) socket-outlets of circuits protected by SELV or PELV with a rated voltage not exceeding 25 V AC or 60 V DC, with the source of supply installed outside zones 0 and 1; or
c) fixed or stationary current-using equipment permanently connected and suitable for installation in zone 1 according to the manufacturer's instruction for use and mounting; or
d) junction boxes and fittings necessary for the supply of equipment installed according to a), b) and c).

Equipment shall have a degree of protection at least IPX4.

EXAMPLE Equipment likely to be installed in zone 1 includes hot tubs, shower pumps, ventilation equipment, towel rails, water heating appliances, luminaires, washing machines, active glazing, infrared and ultraviolet emitters.

Documents
Document Sharing Hub
Full document details: IEC 60364-7-701-2019

701.512.2.4.101.4 Zone 2

Only the following equipment may be erected:

- fixed current-using equipment, having a degree of protection of at least IPX4, that is permanently connected;
- socket-outlets, having a degree of protection of at least IPX4, of circuits protected by SELV or PELV with the source of supply installed outside zones 0 and 1;
- electrical accessories, other than socket-outlets, having a degree of protection at least IPX4, that are permanently connected;
- shaver supply units according to IEC 61558-2-5. If the shaver supply unit is located such that direct spray from the shower is likely, it shall have a degree of protection of at least IPX4.

701.52 Wiring systems

701.522 Selection and erection of wiring systems in relation to external influences

701.522.3 Presence of water (AD) or high humidity (AB)

701.522.3.101

Wiring systems that do not supply equipment in zone 0 shall not be routed through zone 0.

701.522.8 Other mechanical stresses (AJ)

701.522.8.101

NOTE The following requirements are given to reduce the risk of damaging the wiring caused by drilling holes in the wall, e.g. for mounting handles.

The following requirements apply:

a) Wiring systems supplying current using equipment in zones 0, 1 or 2 and erected in parts of walls which are limiting these zones shall be mounted:
   - either vertically from above or horizontally through the adjacent wall on the rear of the appliance when the fixed equipment is mounted above the bath tub or shower basin, for showers without a basin above the surface of the finished floor level (e.g. water heating appliances);
   - either vertically rising from below or horizontally through the adjacent wall on the rear of the appliance when the equipment is placed in the space below the bath tub or shower basin.

b) All other embedded wiring systems including their accessories in parts of walls or partitions which limit a zone 0, 1 or 2 shall not be mounted at a depth less than 6 cm from the wall surface limiting the zone, see L_1 in Figure 1.

c) Where a) or b) are not fulfilled, wiring systems may be erected either if:
   - the circuits are protected either by one of the protective measures SELV or PELV or electrical separation; or
   - the circuits are protected by additional protection according to IEC 60364-4-41:2005, 415.1 provided by RCDs with a rated residual operating current not exceeding 30 mA; such circuits shall contain a protective conductor; or
   - embedded cables incorporating an earthed screen or a metallic covering which complies with the requirements for a protective conductor of the circuit concerned are used; or
   - the cables are enclosed in an earthed conduit, satisfying the requirements for a protective conductor.

Documents
Document Sharing Hub
Full document details: IEC 60364-7-701-2019

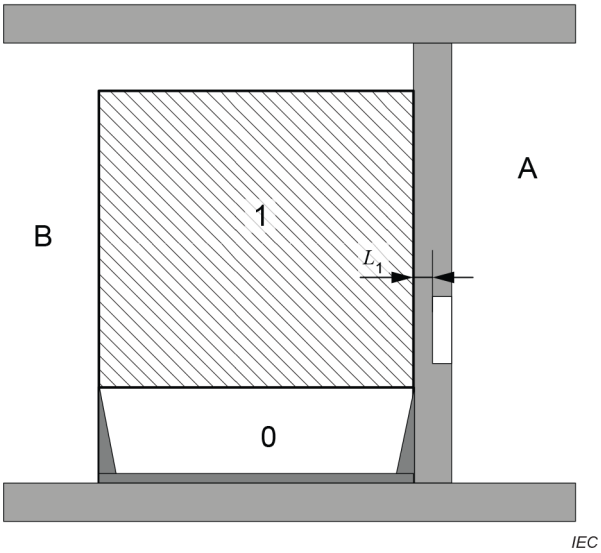

Key

0 Zone 0

1 Zone 1

A Other room

B Bathroom

L_1 Remaining wall thickness, minimum 6 cm

Figure 1 – Remaining wall thickness behind zones

701.53 Devices for protection for safety, isolation, switching, control and monitoring

701.531 Devices for protection against indirect contact by automatic disconnection of supply

701.531.2 Residual current protective devices

701.531.2.101

The type of RCD selected for a circuit shall be compatible with the expected loads to be supplied (i.e. RCD of type AC, type A, type F or type B).

Documents
Document Sharing Hub
Full document details: IEC 60364-7-701-2019

701.101 Examples of zone dimensions

Dimensions in centimetres

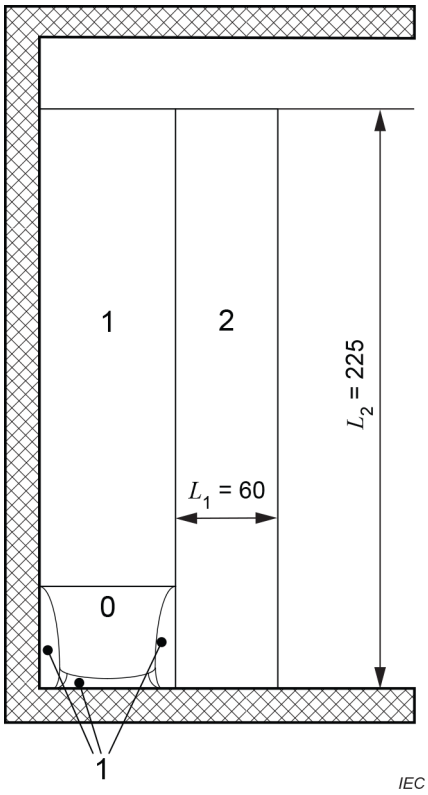

Key

0 Zone 0

1 Zone 1

2 Zone 2

Figure 2 – Dimensions of zones: side view of a bath tub

Documents
Document Sharing Hub
Full document details: IEC 60364-7-701-2019

Dimensions in centimetres

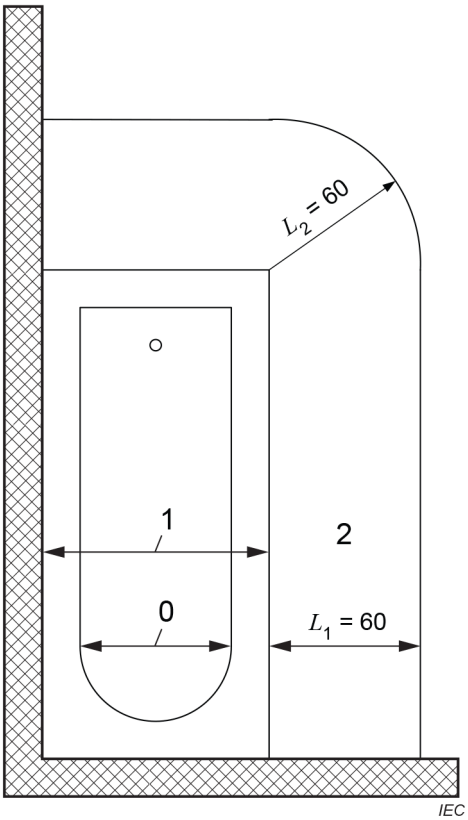

Key

0 Zone 0

1 Zone 1

2 Zone 2

Figure 3 – Dimensions of zones: top view of a bath tub without partition

Documents
Document Sharing Hub

Full document details: IEC 60364-7-701-2019

Dimensions in centimetres

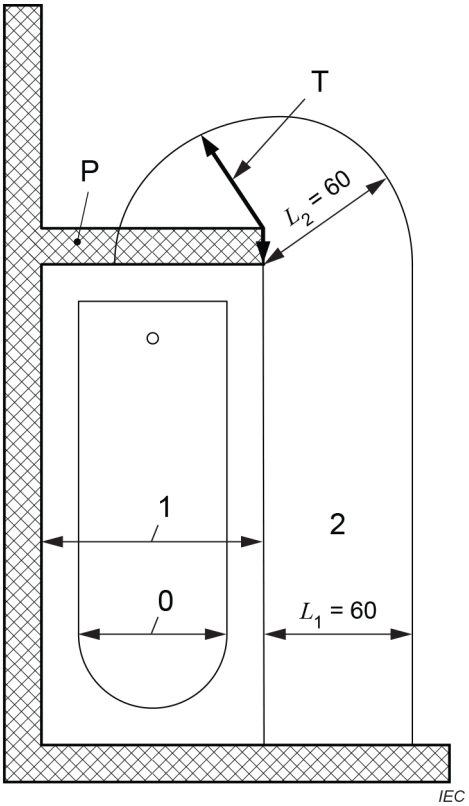

Key

0 Zone 0

1 Zone 1

2 Zone 2

P Fixed partition

T Thread gauge for minimum distance

Figure 4 – Dimensions of zones: top view of a bath tub with fixed partition

Documents
Document Sharing Hub

Full document details: IEC 60364-7-701-2019

Dimensions in centimetres

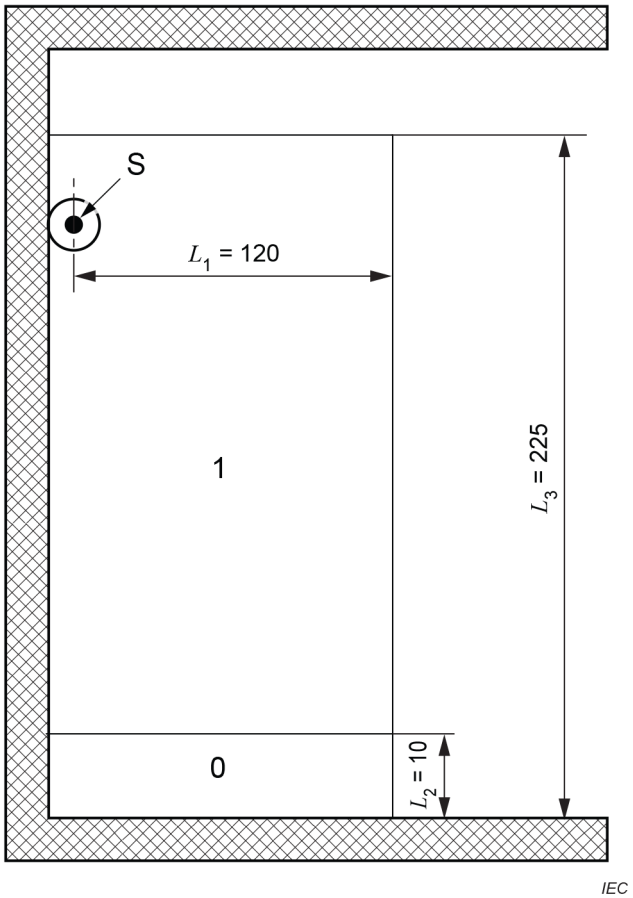

Key

0 Zone 0

1 Zone 1

S Fixed water outlet

Figure 5 – Dimensions of zones 0 and 1: side view of a shower

Documents
Document Sharing Hub
Full document details: IEC 60364-7-701-2019