IEC 60404-13

Edition 2.0 2018-07

INTERNATIONAL STANDARD

NORME INTERNATIONALE

Magnetic materials –
Part 13: Methods of measurement of resistivity, density and stacking factor of electrical steel strip and sheet

Matériaux magnétiques –
Partie 13: Méthodes de mesure de la résistivité, de la masse volumique et du facteur de foisonnement des bandes et tôles en acier électrique

IEC 60404-13:2018-07(en-fr)

Documents
Document Sharing Hub

Full document details: IEC 60404-13 2018

THIS PUBLICATION IS COPYRIGHT PROTECTED
Copyright © 2018 IEC, Geneva, Switzerland

All rights reserved. Unless otherwise specified, no part of this publication may be reproduced or utilized in any form or by any means, electronic or mechanical, including photocopying and microfilm, without permission in writing from either IEC or IEC's member National Committee in the country of the requester. If you have any questions about IEC copyright or have an enquiry about obtaining additional rights to this publication, please contact the address below or your local IEC member National Committee for further information.

Droits de reproduction réservés. Sauf indication contraire, aucune partie de cette publication ne peut être reproduite ni utilisée sous quelque forme que ce soit et par aucun procédé, électronique ou mécanique, y compris la photocopie et les microfilms, sans l'accord écrit de l'IEC ou du Comité national de l'IEC du pays du demandeur. Si vous avez des questions sur le copyright de l'IEC ou si vous désirez obtenir des droits supplémentaires sur cette publication, utilisez les coordonnées ci-après ou contactez le Comité national de l'IEC de votre pays de résidence.

IEC Central Office
3, rue de Varembé
CH-1211 Geneva 20
Switzerland

Tel.: +41 22 919 02 11
info@iec.ch
www.iec.ch

About the IEC
The International Electrotechnical Commission (IEC) is the leading global organization that prepares and publishes International Standards for all electrical, electronic and related technologies.

About IEC publications
The technical content of IEC publications is kept under constant review by the IEC. Please make sure that you have the latest edition, a corrigenda or an amendment might have been published.

IEC Catalogue - webstore.iec.ch/catalogue
The stand-alone application for consulting the entire bibliographical information on IEC International Standards, Technical Specifications, Technical Reports and other documents. Available for PC, Mac OS, Android Tablets and iPad.

IEC publications search - webstore.iec.ch/advsearchform
The advanced search enables to find IEC publications by a variety of criteria (reference number, text, technical committee,…). It also gives information on projects, replaced and withdrawn publications.

IEC Just Published - webstore.iec.ch/justpublished
Stay up to date on all new IEC publications. Just Published details all new publications released. Available online and also once a month by email.

Electropedia - www.electropedia.org
The world's leading online dictionary of electronic and electrical terms containing 21 000 terms and definitions in English and French, with equivalent terms in 16 additional languages. Also known as the International Electrotechnical Vocabulary (IEV) online.

IEC Glossary - std.iec.ch/glossary
67 000 electrotechnical terminology entries in English and French extracted from the Terms and Definitions clause of IEC publications issued since 2002. Some entries have been collected from earlier publications of IEC TC 37, 77, 86 and CISPR.

IEC Customer Service Centre - webstore.iec.ch/csc
If you wish to give us your feedback on this publication or need further assistance, please contact the Customer Service Centre: sales@iec.ch.

A propos de l'IEC
La Commission Electrotechnique Internationale (IEC) est la première organisation mondiale qui élabore et publie des Normes internationales pour tout ce qui a trait à l'électricité, à l'électronique et aux technologies apparentées.

A propos des publications IEC
Le contenu technique des publications IEC est constamment revu. Veuillez vous assurer que vous possédez l'édition la plus récente, un corrigendum ou amendement peut avoir été publié.

Catalogue IEC - webstore.iec.ch/catalogue
Application autonome pour consulter tous les renseignements bibliographiques sur les Normes internationales, Spécifications techniques, Rapports techniques et autres documents de l'IEC. Disponible pour PC, Mac OS, tablettes Android et iPad.

Recherche de publications IEC - webstore.iec.ch/advsearchform

La recherche avancée permet de trouver des publications IEC en utilisant différents critères (numéro de référence, texte, comité d'études,…). Elle donne aussi des informations sur les projets et les publications remplacées ou retirées.

IEC Just Published - webstore.iec.ch/justpublished

Restez informé sur les nouvelles publications IEC. Just Published détaille les nouvelles publications parues. Disponible en ligne et aussi une fois par mois par email.

Electropedia - www.electropedia.org

Le premier dictionnaire en ligne de termes électroniques et électriques. Il contient 21 000 termes et définitions en anglais et en français, ainsi que les termes équivalents dans 16 langues additionnelles. Egalement appelé Vocabulaire Electrotechnique International (IEV) en ligne.

Glossaire IEC - std.iec.ch/glossary
67 000 entrées terminologiques électrotechniques, en anglais et en français, extraites des articles Termes et Définitions des publications IEC parues depuis 2002. Plus certaines entrées antérieures extraites des publications des CE 37, 77, 86 et CISPR de l'IEC.

Service Clients - webstore.iec.ch/csc

Si vous désirez nous donner des commentaires sur cette publication ou si vous avez des questions contactez-nous: sales@iec.ch.

Documents
Document Sharing Hub

Full document details: IEC 60404-13 2018

IEC 60404-13

Edition 2.0 2018-07

INTERNATIONAL STANDARD

NORME INTERNATIONALE

Magnetic materials –
Part 13: Methods of measurement of resistivity, density and stacking factor of electrical steel strip and sheet

Matériaux magnétiques –
Partie 13: Méthodes de mesure de la résistivité, de la masse volumique et du facteur de foisonnement des bandes et tôles en acier électrique

INTERNATIONAL
ELECTROTECHNICAL
COMMISSION

COMMISSION
ELECTROTECHNIQUE
INTERNATIONALE

ICS 17.220.20; 29.030

ISBN 978-2-8322-5869-9

Warning! Make sure that you obtained this publication from an authorized distributor.
Attention! Veuillez vous assurer que vous avez obtenu cette publication via un distributeur agréé.

® Registered trademark of the International Electrotechnical Commission
Marque déposée de la Commission Electrotechnique Internationale

Documents
Document Sharing Hub

Full document details: IEC 60404-13 2018

CONTENTS

FOREWORD 4
1 Scope 6
2 Normative references 6
3 Terms and definitions 6
4 Determination of the resistivity 7
4.1 General 7
4.2 Principles of measurement 7
4.2.1 Method of determining ρ for an Epstein strip specimen (Method R1) 7
4.2.2 Method of determining ρ for a rectangular sheet specimen (Method R2) with supplementary remarks for strip specimen 8
4.2.3 Determination of thickness d 9
4.3 Test specimen 10
4.3.1 Epstein strip specimen 10
4.3.2 Rectangular sheet specimen 10
4.4 Apparatus 10
4.4.1 Common requirements for Method R1 and Method R2 10
4.4.2 Requirements for Method R1 10
4.4.3 Requirements for Method R2 11
4.5 Measuring procedure 11
4.5.1 Determination of the thickness d of the test specimen 11
4.5.2 Procedure with strip specimen (Method R1) 11
4.5.3 Procedure with rectangular sheet specimen (Method R2) 11
4.6 Reproducibility 11
4.7 Test report 12
5 Determination of the density 12
5.1 General 12
5.2 Method based on the measurement of resistance (Method D1) 13
5.2.1 Principles of measurement 13
5.2.2 Test specimen 14
5.2.3 Measuring procedure 14
5.2.4 Reproducibility 15
5.3 Gas pyknometer method (Method D2) 15
5.3.1 Principles of measurement 15
5.3.2 Test specimen 15
5.3.3 Test apparatus 15
5.3.4 Measuring procedure 15
5.3.5 Reproducibility 15
5.4 Test report 15
6 Determination of the stacking factor 16
6.1 General 16
6.2 Test specimen 16
6.3 Measuring procedure 16
6.4 Reproducibility 17
6.5 Test report 17
Annex A (informative) An example of the apparatus for the measurement of the resistivity using a rectangular sheet specimen (Method R2) 19

Documents
Document Sharing Hub
Full document details: IEC 60404-13 2018

Annex B (informative) An example of the determination of density using the gas pyknometer method (Method D2) 20
B.1 Overview 20
B.2 Test specimen 20
B.3 Apparatus 21
B.4 Calibration 21
B.5 Measuring procedure 21
B.6 Repeatability 22
Annex C (informative) Calculation of density based on silicon and aluminium content (Method D4) 23
Bibliography 24

Figure 1 – Circuit for the measurement of resistance of an Epstein strip specimen (Method R1) 7
Figure 2 – Circuit for the measurement of resistance of a rectangular sheet specimen (Method R2) 8
Figure 3 – Experimental data and the regression line of the density ρ_m against the product $\rho_m \cdot \rho$ for non-oriented electrical steel sheet [6] 13
Figure 4 – Schematic diagram of stacking specimen and rams 17
Figure A.1 – Schematic cross-sectional view of the arrangement of the contact holder 19
Figure B.1 – Diagram illustrating the two-chamber pressure gas pyknometer 21

Table B.1 – Number of test discs of diameter 36 mm 20

Documents
Document Sharing Hub
Full document details: IEC 60404-13 2018

INTERNATIONAL ELECTROTECHNICAL COMMISSION

MAGNETIC MATERIALS –

Part 13: Methods of measurement of resistivity, density and stacking factor of electrical steel strip and sheet

FOREWORD

1) The International Electrotechnical Commission (IEC) is a worldwide organization for standardization comprising all national electrotechnical committees (IEC National Committees). The object of IEC is to promote international co-operation on all questions concerning standardization in the electrical and electronic fields. To this end and in addition to other activities, IEC publishes International Standards, Technical Specifications, Technical Reports, Publicly Available Specifications (PAS) and Guides (hereafter referred to as "IEC Publication(s)"). Their preparation is entrusted to technical committees; any IEC National Committee interested in the subject dealt with may participate in this preparatory work. International, governmental and non-governmental organizations liaising with the IEC also participate in this preparation. IEC collaborates closely with the International Organization for Standardization (ISO) in accordance with conditions determined by agreement between the two organizations.
2) The formal decisions or agreements of IEC on technical matters express, as nearly as possible, an international consensus of opinion on the relevant subjects since each technical committee has representation from all interested IEC National Committees.
3) IEC Publications have the form of recommendations for international use and are accepted by IEC National Committees in that sense. While all reasonable efforts are made to ensure that the technical content of IEC Publications is accurate, IEC cannot be held responsible for the way in which they are used or for any misinterpretation by any end user.
4) In order to promote international uniformity, IEC National Committees undertake to apply IEC Publications transparently to the maximum extent possible in their national and regional publications. Any divergence between any IEC Publication and the corresponding national or regional publication shall be clearly indicated in the latter.
5) IEC itself does not provide any attestation of conformity. Independent certification bodies provide conformity assessment services and, in some areas, access to IEC marks of conformity. IEC is not responsible for any services carried out by independent certification bodies.
6) All users should ensure that they have the latest edition of this publication.
7) No liability shall attach to IEC or its directors, employees, servants or agents including individual experts and members of its technical committees and IEC National Committees for any personal injury, property damage or other damage of any nature whatsoever, whether direct or indirect, or for costs (including legal fees) and expenses arising out of the publication, use of, or reliance upon, this IEC Publication or any other IEC Publications.
8) Attention is drawn to the Normative references cited in this publication. Use of the referenced publications is indispensable for the correct application of this publication.
9) Attention is drawn to the possibility that some of the elements of this IEC Publication may be the subject of patent rights. IEC shall not be held responsible for identifying any or all such patent rights.

International Standard IEC 60404-13 has been prepared by IEC Technical Committee 68: Magnetic alloys and steels.

This second edition cancels and replaces the first edition published in 1995 and constitutes a technical revision.

This edition includes the following significant technical changes with respect to the previous edition:

a) the sequence of the density and resistivity sections is changed and the title of the document revised to reflect this;
b) the van-der-Pauw method (Method R2) is also applicable to Epstein strip specimens;
c) the gas pyknometer method is introduced, and the liquid immersion method and the calculation method based on the chemical composition are quoted;

Documents
Document Sharing Hub
Full document details: IEC 60404-13 2018

d) the requirements of the stacking factor section, such as the tolerance of the dimensions of the test specimen and the repeatability of measurement, are changed;

e) an example of the apparatus for determination of the resistivity using a rectangular sheet, which was previously part of the main body of the text, is moved to constitute informative Annex A;

f) an example of the determination of the density by using the gas pyknometer method is added as an informative Annex B;

g) an example of the determination of density based on the calculation of silicon and aluminium contents is added as an informative Annex C.

The text of this International Standard is based on the following documents:

CDV	Report on voting
68/574/CDV	68/586A/RVC

Full information on the voting for the approval of this International Standard can be found in the report on voting indicated in the above table.

This document has been drafted in accordance with the ISO/IEC Directives, Part 2.

A list of all the parts in the IEC 60404 series, under the general title *Magnetic materials*, can be found on the IEC web site.

The committee has decided that the contents of this document will remain unchanged until the stability date indicated on the IEC website under "http://webstore.iec.ch" in the data related to the specific document. At this date, the document will be

- reconfirmed,
- withdrawn,
- replaced by a revised edition, or
- amended.

Documents
Document Sharing Hub

Full document details: IEC 60404-13 2018

MAGNETIC MATERIALS –

Part 13: Methods of measurement of resistivity, density and stacking factor of electrical steel strip and sheet

1 Scope

This part of IEC 60404 specifies the methods used for determining the resistivity, density and stacking factor of grain-oriented and non-oriented electrical steel strip and sheet. These quantities are necessary to establish the physical characteristics of the material. Moreover, the density is necessary to allow specified values of the magnetic polarization, resistivity and stacking factor to be determined.

Since these properties are functions of temperature, the measurements will be made at an ambient temperature of (23 ±5) °C except when specified in this document.

2 Normative references

The following documents are referred to in the text in such a way that some or all of their content constitutes requirements of this document. For dated references, only the edition cited applies. For undated references, the latest edition of the referenced document (including any amendments) applies.

IEC 60050-121, *International Electrotechnical Vocabulary – Part 121: Electromagnetism*

IEC 60050-221, *International Electrotechnical Vocabulary – Chapter 221: Magnetic materials and components*

IEC 60404-2, *Magnetic materials – Part 2: Methods of measurement of the magnetic properties of electrical steel sheet and strip by means of an Epstein frame*

IEC 60404-3, *Magnetic materials – Part 3: Methods of measurement of the magnetic properties of magnetic sheet and strip by means of a single sheet tester*

ISO 1183-3, *Plastics – Methods for determining the density of non-cellular plastics – Part 3: Gas pyknometer method*

3 Terms and definitions

For the purposes of this document, the terms and definitions given in IEC 60050-121, IEC 60050-221 and ISO 1183-3 apply.

ISO and IEC maintain terminological databases for use in standardization at the following addresses:

- IEC Electropedia: available at http://www.electropedia.org/
- ISO Online browsing platform: available at http://www.iso.org/obp

Documents
Document Sharing Hub

Full document details: IEC 60404-13 2018

4 Determination of the resistivity

4.1 General

Two methods for the determination of the resistivity of a test specimen are described in this document; Method R1 using an Epstein strip specimen, and Method R2 using a rectangular sheet specimen.

NOTE Method R2 is based on the van-der-Pauw (VDP) method [1][1] which is based on the theory of conformal mapping of two-dimensional fields. For a body of uniform thickness and arbitrary shape, an exact mathematical formula exists for the resistivity determined from the voltage to current ratio obtained using four contacts. The formula is simplified when specimens and contact positions are highly symmetrical. Method R2 is particularly appropriate for rectangular sheet specimens.

The method of determination of the resistivity ρ, based on the measurement of the geometric dimensions of the test specimen including the thickness, can be applied to all types of material specimens. However, the method for further use to determine the density ρ_m in accordance with 5.2 is restricted to the materials as specified in 5.1.

4.2 Principles of measurement

4.2.1 Method of determining ρ for an Epstein strip specimen (Method R1)

The circuit for the measurement of the resistance of an Epstein strip specimen shall be connected as shown in Figure 1. Two electrical contacts A and B shall be arranged on either end of the shorter sides of the test specimen to supply a homogeneous current through the test specimen in the longitudinal direction. Two electrical contacts, C and D, located inside the contacts A and B shall be arranged on a longer side edge of the test specimen to measure the voltage over the length l_e. It is not necessary to remove the oxide layer or other insulating coatings because the contacts are made at the cut edges of the specimen.

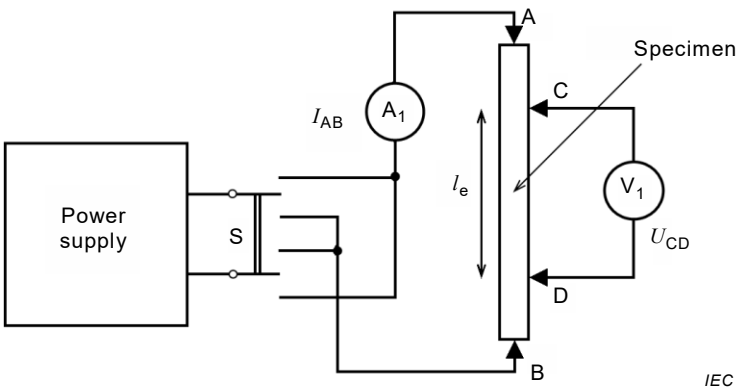

Key

A, B, C, D	electrical contact	I_{AB}	current flowing between A and B
A_1	DC ammeter	S	switch for current reversal
V_1	DC voltmeter	U_{CD}	voltage between C and D
l_e	distance between C and D		

Figure 1 – Circuit for the measurement of resistance of an Epstein strip specimen (Method R1)

[1] Numbers in square brackets refer to the Bibliography.

Documents
Document Sharing Hub
Full document details: IEC 60404-13 2018

If a current flows homogeneously through the test specimen, the resistance R of the material over the length l_e of the Epstein strip specimen shall be determined according to Ohm's law as follows:

$$R = \frac{U_{CD}}{I_{AB}} \tag{1}$$

where

R is the resistance of the material over the length l_e between the contacts C and D, in ohms;

U_{CD} is the voltage between the contacts C and D, in volts;

I_{AB} is the current flowing between the contacts A and B, in amperes.

The resistivity ρ shall be determined from the following formula:

$$\rho = \frac{R \cdot b \cdot d}{l_e} \tag{2}$$

where

ρ is the resistivity of the material of the test specimen, in ohm metres;

b is the width of the test specimen, in metres;

d is the thickness of the test specimen without an insulation layer, in metres;

l_e is the distance between the contacts C and D, in metres.

4.2.2 Method of determining ρ for a rectangular sheet specimen (Method R2) with supplementary remarks for strip specimen

The circuit for the measurement of the resistance of a square-shaped or rectangular sheet specimen shall be connected as shown in Figure 2. Four electrical contacts A, B, C and D shall be arranged symmetrically at the centre of each edge of the test specimen. The contacts A, B, C and D shall be as small as possible. With a current flowing through the contacts A and B, the voltage between the contacts C and D shall be measured. It is not necessary to remove oxide layer or other insulating coatings because the contacts are made at the cut edges of the specimens.

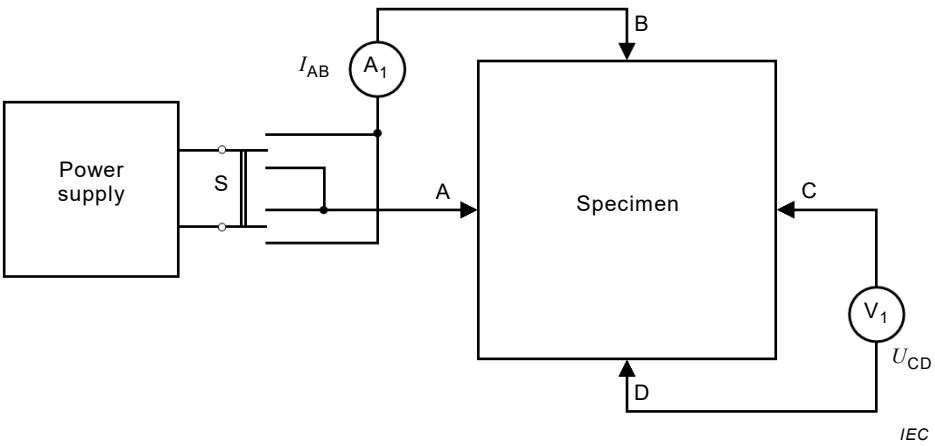

Key

A, B, C, D	electrical contact	I_{AB}	current flowing between A and B
A_1	DC ammeter	S	switch for current reversal
V_1	DC voltmeter	U_{CD}	voltage between C and D

Figure 2 – Circuit for the measurement of resistance of a rectangular sheet specimen (Method R2)

Documents
Document Sharing Hub
Full document details: IEC 60404-13 2018

The resistance $R_{AB,CD}$ shall be calculated according to the following formula:

$$R_{AB,CD} = \frac{U_{CD}}{I_{AB}} \tag{3}$$

where

$R_{AB,CD}$ is the resistance measured between the contacts C and D, in ohms;

U_{CD} is the voltage between the contacts C and D, in volts;

I_{AB} is the current flowing between the contacts A and B, in amperes.

Correspondingly, the resistance $R_{BC,DA}$ shall be obtained from the voltage between the contacts D and A and the current flowing through the contacts B and C.

On the basis of the theory of conformal mapping of two-dimensional fields [1], for a body of uniform thickness and arbitrary shape, the following formula holds:

$$\rho = \frac{\pi \cdot d}{\ln 2} \cdot \frac{R_{AB,\,CD} + R_{BC,\,DA}}{2} \cdot F_{\rho} \tag{4}$$

where

ρ is the resistivity of the material of the test specimen, in ohm metres;

d is the thickness of the test specimen without insulation layer, in metres;

F_{ρ} is a function of the ratio $\frac{R_{AB,\,CD}}{R_{BC,\,DA}}$ only.

If the ratio $\frac{R_{AB,\,CD}}{R_{BC,\,DA}}$ is close to unity, the function F_{ρ} becomes 1, so that it can be omitted [1]. To ensure that this ratio is close to unity, the contacts shall be arranged symmetrically at the centres of the edges of the rectangular sheet specimen as shown in Figure 2.

Method R2 can also be applied to Epstein strip specimen offering the advantage that the same base plate and contact holders (see Annex A) as for the rectangular sheet specimens can be used, in this case, to obtain a reliable result of the measurement, a certain number (e.g. > 10) of Epstein strip specimens should be tested, and the average should be taken as the result.

NOTE It has been shown that Method R2 (van der Pauw method [1]) is equivalent to Method R1, within limits which are lower than the dispersion between individual strip specimens of one grade of material [2]. The Method R2 has the advantages of versatility of specimen shape [3].

4.2.3 Determination of thickness d

4.2.3.1 General

The thickness of the test specimen d used in Formulae (2) and (4) shall be determined as specified in 4.2.3.2.

4.2.3.2 Calculating the thickness from the density ρ_m

The thickness of the test specimen d shall be calculated using the value of the density ρ_m determined as specified in 5.3, or supplied by the manufacturer. The thickness d shall be determined from the following formula:

$$d = \frac{m}{\rho_m \cdot b \cdot l} \tag{5}$$

Documents
Document Sharing Hub
Full document details: IEC 60404-13 2018

where

m is the mass of the test specimen, in kilograms;

ρ_m is the density of the material of the test specimen, in kilograms per cubic metre;

b is the width of the test specimen, in metres;

l is the length of the test specimen, in metres.

4.3 Test specimen

4.3.1 Epstein strip specimen

The Epstein strip specimen used in Method R1 (according to 4.2.1), conforming with IEC 60404-2, shall have the following dimensions:

– width b = 30 mm ±0,2 mm;

– length 280 mm ≤ l ≤ 320 mm with a tolerance of ± 0,5 mm.

4.3.2 Rectangular sheet specimen

The dimensions of the square-shaped or rectangular sheet specimen used in Method R2 (according to 4.2.2), conforming with IEC 60404-3, shall be as follows:

– width 300 mm ≤ b ≤ 500 mm with a tolerance of ± 0,5 mm;

– length 500 mm ≤ l ≤ 610 mm with a tolerance of ± 0,5 mm.

4.4 Apparatus

4.4.1 Common requirements for Method R1 and Method R2

The following equipment is required:

– according to 4.2.3.2, a calibrated balance, capable of weighing the mass of the test specimen to within ± 0,1 %;

– a power supply consisting of a stable low voltage DC current source capable of supplying a current of the order 1 A to 10 A (unless a four-terminal ohm meter is used, as specified in 4.5.2 and 4.5.3);

– a resistance measuring device (e.g. ammeter and voltmeter of accuracy ± 0,1 % or better, or a Kelvin bridge or a four-terminal ohm meter of corresponding accuracy) capable of measuring the resistance R of the test specimen to within ± 1 %;

– a jig for making contact with the test specimen (as specified in 4.4.2 and 4.4.3) and, between the contacts, a supporting flat plate smaller than the test specimen (on sides where contacts are arranged) but not by more than 5 mm (10 mm for rectangular sheet specimens) on each side. The thickness of the support shall allow the contacts to touch the specimen lying on the support.

4.4.2 Requirements for Method R1

The apparatus for making electrical contact with the strip specimen employs four contacts: two voltage contacts (tips) are mounted on a removable bridge and two current contacts are fixed to the base plate. The four contacts shall be arranged so that the two voltage contacts C and D lie on a longer edge of the strip between the current contacts A and B (see Figure 1). The current contacts shall be arranged symmetrically in the centre of each of the shorter edges of the strip within ± 0,5 mm. The two voltage contacts shall have a relatively sharp edge (e.g. with a radius of curvature of 1 mm). The distance l_e between the voltage contacts C and D shall exceed 200 mm. The minimum distance between the voltage contacts and the current contacts shall be not less than the width of the test specimen (the distance l_e between the tips shall be determined within ± 0,5 mm, see Figure 1).

Documents
Document Sharing Hub
Full document details: IEC 60404-13 2018

4.4.3 Requirements for Method R2

Four contacts with a relatively sharp edge (e.g. with a radius of curvature of 1 mm) shall each be mounted on a holder which is fixed to the base plate. The contacts shall be arranged symmetrically in the centre of each edge of the specimen, within ± 1 mm (or ± 0,5 mm for an Epstein strip specimen) (see Figure 2).

NOTE 1 Annex A gives an example of the apparatus for Method R2.

NOTE 2 Other modes such as soldering electrical wires to the test specimen at the points A, B, C and D of the rectangular test specimen (see Figure 2) can be used to provide good electrical contact.

4.5 Measuring procedure

4.5.1 Determination of the thickness d of the test specimen

The thickness d of the test specimen shall be determined as specified in 4.2.3.2. The length l and width b of the test specimen shall be determined using the required length measuring device, and the mass m of the test specimen shall be determined using the required balance.

4.5.2 Procedure with strip specimen (Method R1)

The circuit connections shall be made as shown in Figure 1. A current I_{AB} having a value between 1 A and 5 A that depends on the thickness and properties of the material and that is sufficient to give a value of the voltage U_{CD} of the specified accuracy shall be passed through the test specimen. If a four-terminal ohm meter having the required measurement accuracy is used, a lower value of the current is permitted. The values of the voltage U_{CD} and the current I_{AB} shall be recorded except when using a four-terminal ohm meter or a Kelvin bridge to measure resistance directly. To reduce contributions from thermal voltages, the current shall then be reversed and set to the same value, the value of the voltage U_{CD} recorded and the average of the two readings calculated.

The resistance R shall then be calculated using Formula (1) except when using a four-terminal ohm meter or a Kelvin bridge to measure resistance directly.

The resistivity ρ shall be calculated using Formula (2) combined with Formula (5).

4.5.3 Procedure with rectangular sheet specimen (Method R2)

The circuit connections shall be made as shown in Figure 2. A current having a value between 2 A and 10 A, that is sufficient to give a reading of the voltage U_{CD} to the specified accuracy, shall be passed via the contacts A and B through the test specimen. If a four-terminal ohm meter having the required measurement accuracy is used, a lower value of the electric current is permitted. The values of the voltage, U_{CD}, and the current, I_{AB}, shall be recorded except when using a four-terminal ohm meter or a Kelvin bridge to measure resistance directly. To reduce contributions from thermal voltages, the current shall then be reversed and set to the same value, the value of the voltage U_{CD} recorded, and the average of the two readings calculated.

The resistance $R_{AB,CD}$ shall then be calculated using Formula (3) except when using a four-terminal ohm meter or a Kelvin bridge to measure resistance directly. Correspondingly, the resistance $R_{BC,DA}$ shall be measured following the same procedure.

The resistivity ρ shall be calculated using Formula (4) combined with Formula (5).

4.6 Reproducibility

According to comparing experiments [3], the reproducibility of the methods for the determination of the resistivity in accordance with Clause 4 is characterized by a relative standard deviation of 0,5 %.

Documents
Document Sharing Hub

Full document details: IEC 60404-13 2018

4.7 Test report

The test report shall refer to this document and include the following information, as applicable:

a) all details necessary for complete identification of the specimens, such as the type or grade of material, nominal thickness;

b) the width b, and the length l of the test specimen, in metres;

c) the mass m of the test specimen, in kilograms;

d) the test method adopted (if Method R2 is used with Epstein strip specimen, number of specimens should be indicated);

e) the ambient temperature at which the measurement was made, in Celsius;

f) the test result of resistivity ρ, in ohm metres, rounded to the nearest 0,1 × 10^{-8} Ω·m.

5 Determination of the density

5.1 General

The following four methods for the determination of the density are described in this document:

– Method D1, based on measurement of the resistivity using a specimen strip or using a rectangular sheet specimen;

– Method D2, gas pyknometer method according to ISO 1183-3. This is a fundamental method;

– Method D3, liquid immersion method according to ISO 1183-1:2012 [4] and ISO 2738:1999 [5];

– Method D4, theoretical calculation method based on chemical composition of the specimen, as given in Annex C.

Method D1 is an indirect measurement method based on Methods R1 and R2 of Clause 4 on resistivity determination. Method D1 as specified in 5.2 is applicable only to non-oriented electrical steel with the following range of chemical compositions:

– silicon: $C_{Si} \leq 4$ %;

– aluminium: $0{,}17\ C_{Si} - 0{,}28 \leq C_{Al} \leq 0{,}17\ C_{Si} + 0{,}28$ and $C_{Al} \geq 0$;

– total of other alloy constituents: $C_{res} \leq 0{,}4$ %,

where

C_{Si} is the mass fraction of silicon, in percentage;

C_{Al} is the mass fraction of aluminium, in percentage;

C_{res} is the mass fraction of total alloy constituents other than silicon and aluminium, in percentage.

If the chemical composition is not known, it shall be verified before using this indirect method. Generally, the chemical composition of electrical steel is left to the discretion of the manufacturer.

Method D2 is a direct measurement method as specified in 5.3 and applicable for grain-oriented and non-oriented electrical steel.

Method D3 is a direct measurement method called the liquid immersion method, according to ISO 1183-1:2012 [4] and ISO 2738:1999 [5].

NOTE 1 For the determination of the density, the liquid immersion method was earlier considered to be a fundamental method for use in cases of arbitration. However, experience has shown that this method is difficult to use in the case of sheet specimens of electrical steel with a relatively large surface area because of the influence of residual air bubbles adhering to the surface which are not easily removed. In contrast, the gas pyknometer

AVA Documents Document Sharing Hub

Full document details: IEC 60404-13 2018

method according to ISO 1183-3 is more practical and can lead to higher accuracy for sheet specimens of electrical steel.

Method D4 is an indirect measurement method based on the theoretical calculation of the chemical composition of the test specimen, which should be used by agreement between the parties concerned. An example of the calculation of the density, through consideration of the silicon and aluminium content, is given in Annex C.

NOTE 2 Manufacturers can determine the density of material by the testing of thicker specimens where it is easier to determine the volume by dimensional measurement during the manufacturing process of the material.

5.2 Method based on the measurement of resistance (Method D1)

5.2.1 Principles of measurement

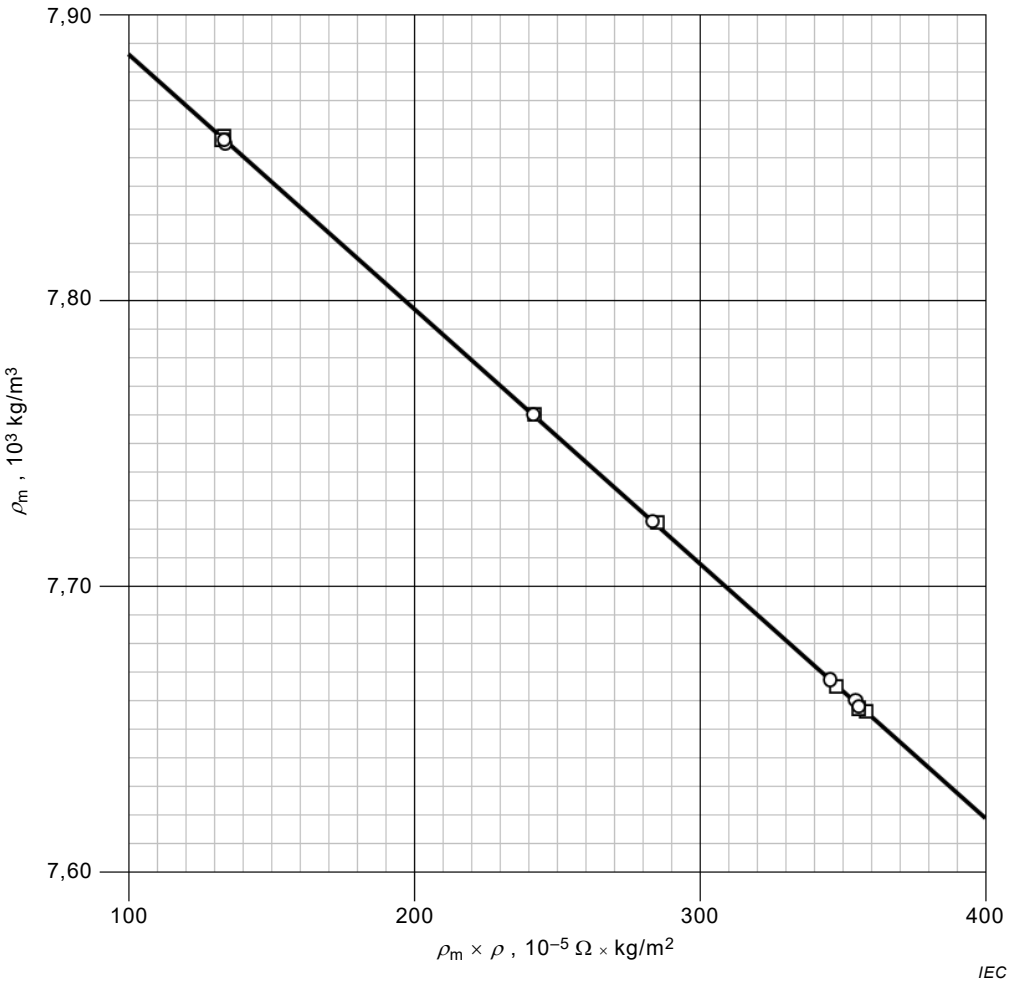

Key

Symbols ○ and □ are for resistivity Method R1 and Method R2 respectively. See [6] for details.

Figure 3 – Experimental data and the regression line of the density ρ_m against the product $\rho_m \cdot \rho$ for non-oriented electrical steel sheet [6]

In the case of materials specified in 5.1 for Method D1, experience has shown that the relationship between the density ρ_m and the product of density and resistivity $\rho_m \cdot \rho$ is a simple, almost linear one [6], as shown in Figure 3. Thus, it is possible to determine the density of the material by the determination of the product $\rho_m \cdot \rho$, based on the measurement of the resistance, mass and geometrical dimensions of the test specimen.

NOTE 1 Both the density ρ_m and the resistivity ρ are functions of the silicon and aluminium content.

Documents
Document Sharing Hub
Full document details: IEC 60404-13 2018

The linear function as shown in Figure 3, obtained by linear regression from experimental data [6], follows the empirical relation:

$$\rho_m = 7\,975 - 89\,000 \times (\rho_m \cdot \rho) \tag{6}$$

where

$\rho_m \cdot \rho$ is the value of the product of density and resistivity of the test specimen, in ohm kilograms per square meter.

NOTE 2 This relationship has been established by careful and statistical application of the liquid immersion method [6] taking the usual impurities of non-oriented material into account. The product $\rho_m \cdot \rho$ for the two different types of test specimen used for the Epstein frame (Method R1) and the rectangular sheet test method (Method R2) are determined in accordance with Clause 4.

5.2.2 Test specimen

5.2.2.1 Epstein strip specimen

In the case of using an Epstein strip specimen as specified in 4.2.1, the relationship between the product $\rho_m \cdot \rho$ and the resistance R of the test specimen is given in Formula (7) deduced from Formulae (2) and (5):

$$\rho_m \cdot \rho = \frac{R \cdot m}{l_e \cdot l} \tag{7}$$

Then the value of the density ρ_m shall be calculated as follows, deduced from Formulae (6) and (7):

$$\rho_m = 7\,975 - 89\,000 \times \frac{m}{l_e \cdot l} \cdot R \tag{8}$$

5.2.2.2 Rectangular sheet specimen

In the case of using a square-shaped or rectangular sheet specimens as specified in 4.2.2, the relationship between the product $\rho_m \cdot \rho$ and the resistance R of the test specimen is given in Formula (9) deduced from Formulae (4) and (5), with $F_\rho = 1$:

$$\rho_m \cdot \rho = \frac{\pi \cdot m}{l \cdot b \cdot \ln 2} \cdot \frac{R_{AB,\,CD} + R_{BC,\,DA}}{2} \tag{9}$$

Then the value of the density ρ_m shall be calculated as follows, deduced from Formulae (6) and (9):

$$\rho_m = 7\,975 - 89\,000 \times \frac{\pi \cdot m}{l \cdot b \cdot \ln 2} \cdot \frac{R_{AB,\,CD} + R_{BC,\,DA}}{2} \tag{10}$$

5.2.3 Measuring procedure

When using an Epstein strip specimen, the resistance R shall be measured as specified in 4.5.2. The value of ρ_m shall be calculated using Formula (8). It can also be read from Figure 3 with the value of the product $\rho_m \cdot \rho$ determined from Formula (7).

When using a rectangular sheet specimen (or Epstein strip specimen), the resistance $R_{AB,CD}$ and $R_{BC,DA}$ shall be measured as specified in 4.5.3. The value of ρ_m shall be calculated using Formula (10). It can also be read from Figure 3 with the value of the product $\rho_m \cdot \rho$ determined from Formula (9).

Documents
Document Sharing Hub
Full document details: IEC 60404-13 2018