IEC 60404-16

Edition 1.0 2018-03

INTERNATIONAL STANDARD

NORME INTERNATIONALE

Magnetic materials –
Part 16: Methods of measurement of the magnetic properties of Fe-based amorphous strip by means of a single sheet tester

Matériaux magnétiques –
Partie 16: Méthodes de mesure des propriétés magnétiques des bandes en alliage amorphe à base de fer à l'aide de l'essai sur tôle unique

IEC 60404-16:2018-03(en-fr)

Documents
Document Sharing Hub

Full document details: IEC 60404-16 2018

THIS PUBLICATION IS COPYRIGHT PROTECTED

Copyright © 2018 IEC, Geneva, Switzerland

All rights reserved. Unless otherwise specified, no part of this publication may be reproduced or utilized in any form or by any means, electronic or mechanical, including photocopying and microfilm, without permission in writing from either IEC or IEC's member National Committee in the country of the requester. If you have any questions about IEC copyright or have an enquiry about obtaining additional rights to this publication, please contact the address below or your local IEC member National Committee for further information.

Droits de reproduction réservés. Sauf indication contraire, aucune partie de cette publication ne peut être reproduite ni utilisée sous quelque forme que ce soit et par aucun procédé, électronique ou mécanique, y compris la photocopie et les microfilms, sans l'accord écrit de l'IEC ou du Comité national de l'IEC du pays du demandeur. Si vous avez des questions sur le copyright de l'IEC ou si vous désirez obtenir des droits supplémentaires sur cette publication, utilisez les coordonnées ci-après ou contactez le Comité national de l'IEC de votre pays de résidence.

IEC Central Office
3, rue de Varembé
CH-1211 Geneva 20
Switzerland

Tel.: +41 22 919 02 11
info@iec.ch
www.iec.ch

About the IEC
The International Electrotechnical Commission (IEC) is the leading global organization that prepares and publishes International Standards for all electrical, electronic and related technologies.

About IEC publications
The technical content of IEC publications is kept under constant review by the IEC. Please make sure that you have the latest edition, a corrigenda or an amendment might have been published.

IEC Catalogue - webstore.iec.ch/catalogue
The stand-alone application for consulting the entire bibliographical information on IEC International Standards, Technical Specifications, Technical Reports and other documents. Available for PC, Mac OS, Android Tablets and iPad.

IEC publications search - webstore.iec.ch/advsearchform
The advanced search enables to find IEC publications by a variety of criteria (reference number, text, technical committee,…). It also gives information on projects, replaced and withdrawn publications.

IEC Just Published - webstore.iec.ch/justpublished
Stay up to date on all new IEC publications. Just Published details all new publications released. Available online and also once a month by email.

Electropedia - www.electropedia.org
The world's leading online dictionary of electronic and electrical terms containing 21 000 terms and definitions in English and French, with equivalent terms in 16 additional languages. Also known as the International Electrotechnical Vocabulary (IEV) online.

IEC Glossary - std.iec.ch/glossary
67 000 electrotechnical terminology entries in English and French extracted from the Terms and Definitions clause of IEC publications issued since 2002. Some entries have been collected from earlier publications of IEC TC 37, 77, 86 and CISPR.

IEC Customer Service Centre - webstore.iec.ch/csc
If you wish to give us your feedback on this publication or need further assistance, please contact the Customer Service Centre: sales@iec.ch.

A propos de l'IEC
La Commission Electrotechnique Internationale (IEC) est la première organisation mondiale qui élabore et publie des Normes internationales pour tout ce qui a trait à l'électricité, à l'électronique et aux technologies apparentées.

A propos des publications IEC
Le contenu technique des publications IEC est constamment revu. Veuillez vous assurer que vous possédez l'édition la plus récente, un corrigendum ou amendement peut avoir été publié.

Catalogue IEC - webstore.iec.ch/catalogue
Application autonome pour consulter tous les renseignements bibliographiques sur les Normes internationales, Spécifications techniques, Rapports techniques et autres documents de l'IEC. Disponible pour PC, Mac OS, tablettes Android et iPad.

Recherche de publications IEC - webstore.iec.ch/advsearchform

La recherche avancée permet de trouver des publications IEC en utilisant différents critères (numéro de référence, texte, comité d'études,…). Elle donne aussi des informations sur les projets et les publications remplacées ou retirées.

IEC Just Published - webstore.iec.ch/justpublished

Restez informé sur les nouvelles publications IEC. Just Published détaille les nouvelles publications parues. Disponible en ligne et aussi une fois par mois par email.

Electropedia - www.electropedia.org

Le premier dictionnaire en ligne de termes électroniques et électriques. Il contient 21 000 termes et définitions en anglais et en français, ainsi que les termes équivalents dans 16 langues additionnelles. Egalement appelé Vocabulaire Electrotechnique International (IEV) en ligne.

Glossaire IEC - std.iec.ch/glossary
67 000 entrées terminologiques électrotechniques, en anglais et en français, extraites des articles Termes et Définitions des publications IEC parues depuis 2002. Plus certaines entrées antérieures extraites des publications des CE 37, 77, 86 et CISPR de l'IEC.

Service Clients - webstore.iec.ch/csc

Si vous désirez nous donner des commentaires sur cette publication ou si vous avez des questions contactez-nous: sales@iec.ch.

Documents
Document Sharing Hub

Full document details: IEC 60404-16 2018

IEC 60404-16

Edition 1.0 2018-03

INTERNATIONAL STANDARD

NORME INTERNATIONALE

Magnetic materials –
Part 16: Methods of measurement of the magnetic properties of Fe-based amorphous strip by means of a single sheet tester

Matériaux magnétiques –
Partie 16: Méthodes de mesure des propriétés magnétiques des bandes en alliage amorphe à base de fer à l'aide de l'essai sur tôle unique

INTERNATIONAL
ELECTROTECHNICAL
COMMISSION

COMMISSION
ELECTROTECHNIQUE
INTERNATIONALE

ICS 17.220.20; 29.030

ISBN 978-2-8322-5426-4

Warning! Make sure that you obtained this publication from an authorized distributor.
Attention! Veuillez vous assurer que vous avez obtenu cette publication via un distributeur agréé.

® Registered trademark of the International Electrotechnical Commission
Marque déposée de la Commission Electrotechnique Internationale

Documents
Document Sharing Hub

Full document details: IEC 60404-16 2018

CONTENTS

FOREWORD 4
INTRODUCTION 6
1 Scope 7
2 Normative references 7
3 Terms and definitions 7
4 General principles 8
4.1 Principle of the method 8
4.2 Test specimen 9
4.3 Test apparatus 9
4.3.1 General 9
4.3.2 Yoke 10
4.3.3 Windings 10
4.3.4 Air flux compensation 11
4.3.5 Magnetic shielding 11
4.4 Power supply 11
4.5 Measuring instruments 12
4.6 Digital sampling technique 12
5 Measurement procedure 13
5.1 Principle of measurement 13
5.2 Preparation of measurement 13
5.3 Adjustment of power supply 14
6 Determination of characteristics 14
6.1 Determination of the magnetic polarization 14
6.2 Determination of the magnetic field strength 15
6.3 Determination of the specific total loss 15
6.4 Determination of the specific apparent power 16
7 Reproducibility 16
Annex A (informative) Requirements of the single sheet tester for Fe-based amorphous strip 17
A.1 Shape of test specimen 17
A.2 H coil method 17
A.3 Yoke 17
A.4 Wirings 17
A.5 Non-inductive precision resistor 18
A.6 Magnetic shielding 18
A.7 Method for checking the stability of the installed H coil from time to time 18
Annex B (informative) Digital sampling technique for the determination of the magnetic properties and numerical air flux compensation 19
B.1 General 19
B.2 Technical details and requirements 19
B.3 Calibration aspects 22
B.4 Numerical air flux compensation 22
Annex C (informative) Sinusoidal waveform control of the magnetic polarization by digital means 24
Bibliography 26

Documents
Document Sharing Hub
Full document details: IEC 60404-16 2018

Figure 1 – Schematic diagram of the test apparatus 8
Figure 2 – Circuit of the wattmeter method with H coil mode 9
Figure 3 – Yoke dimensions 10
Figure 4 – Circuit of the wattmeter method with H coil mode adopting the digital sampling technique 12

Documents
Document Sharing Hub
Full document details: IEC 60404-16 2018

INTERNATIONAL ELECTROTECHNICAL COMMISSION

MAGNETIC MATERIALS –

Part 16: Methods of measurement of the magnetic properties of Fe-based amorphous strip by means of a single sheet tester

FOREWORD

1) The International Electrotechnical Commission (IEC) is a worldwide organization for standardization comprising all national electrotechnical committees (IEC National Committees). The object of IEC is to promote international co-operation on all questions concerning standardization in the electrical and electronic fields. To this end and in addition to other activities, IEC publishes International Standards, Technical Specifications, Technical Reports, Publicly Available Specifications (PAS) and Guides (hereafter referred to as "IEC Publication(s)"). Their preparation is entrusted to technical committees; any IEC National Committee interested in the subject dealt with may participate in this preparatory work. International, governmental and non-governmental organizations liaising with the IEC also participate in this preparation. IEC collaborates closely with the International Organization for Standardization (ISO) in accordance with conditions determined by agreement between the two organizations.
2) The formal decisions or agreements of IEC on technical matters express, as nearly as possible, an international consensus of opinion on the relevant subjects since each technical committee has representation from all interested IEC National Committees.
3) IEC Publications have the form of recommendations for international use and are accepted by IEC National Committees in that sense. While all reasonable efforts are made to ensure that the technical content of IEC Publications is accurate, IEC cannot be held responsible for the way in which they are used or for any misinterpretation by any end user.
4) In order to promote international uniformity, IEC National Committees undertake to apply IEC Publications transparently to the maximum extent possible in their national and regional publications. Any divergence between any IEC Publication and the corresponding national or regional publication shall be clearly indicated in the latter.
5) IEC itself does not provide any attestation of conformity. Independent certification bodies provide conformity assessment services and, in some areas, access to IEC marks of conformity. IEC is not responsible for any services carried out by independent certification bodies.
6) All users should ensure that they have the latest edition of this publication.
7) No liability shall attach to IEC or its directors, employees, servants or agents including individual experts and members of its technical committees and IEC National Committees for any personal injury, property damage or other damage of any nature whatsoever, whether direct or indirect, or for costs (including legal fees) and expenses arising out of the publication, use of, or reliance upon, this IEC Publication or any other IEC Publications.
8) Attention is drawn to the Normative references cited in this publication. Use of the referenced publications is indispensable for the correct application of this publication.
9) Attention is drawn to the possibility that some of the elements of this IEC Publication may be the subject of patent rights. IEC shall not be held responsible for identifying any or all such patent rights.

International Standard IEC 60404-16 has been prepared by IEC technical committee 68: Magnetic alloys and steels.

The text of this International Standard is based on the following documents:

CDV	Report on voting
68/570/CDV	68/583A/RVC

Full information on the voting for the approval of this International Standard can be found in the report on voting indicated in the above table.

This document has been drafted in accordance with the ISO/IEC Directives, Part 2.

A list of all parts in the IEC 60404 series, published under the general title *Magnetic materials*, can be found on the IEC website.

AVA Documents
Document Sharing Hub

The committee has decided that the contents of this document will remain unchanged until the stability date indicated on the IEC website under "http://webstore.iec.ch" in the data related to the specific document. At this date, the document will be

- reconfirmed,
- withdrawn,
- replaced by a revised edition, or
- amended.

The contents of the corrigendum of Novembre 2018 have been included in this copy.

Documents
Document Sharing Hub

Full document details: IEC 60404-16 2018

INTRODUCTION

A method of measuring the magnetic properties of Fe-based amorphous strip is required to grade what is regarded as a promising material to reduce energy loss in transformer cores and, consequently, to reduce global warming.

Fe-based amorphous strip is produced by a rapidly-solidifying, direct-casting process. The strip is intended primarily for the construction of wound cores of distribution transformers for commercial power frequency (50 Hz and 60 Hz) applications.

After appropriate heat treatment, the strip exhibits a significantly lower value of specific total loss compared to grain-oriented electrical steel strip. It is associated with low hysteresis loss due to low magnetic anisotropy and low eddy current loss due to high resistivity and reduced thickness. However, significant deterioration can occur by applying stress on the strip due to the large magnetostriction and low magnetic anisotropy characteristics of the material.

Therefore, a method of measurement of the magnetic properties of Fe-based amorphous strip by means of a single sheet tester (SST) is required, independent of IEC 60404-3 [1][1], which is specified for electrical steel sheets.

The almost exclusively applied wattmeter method is used also in this standard. However, the widely used version with the determination of the magnetic field strength from the magnetizing current (“MC method”) is not applicable to this kind of material, because the influence of the yokes on the loss measurement is significantly greater for the thinner and magnetically softer test specimen of this material. Thus, the wattmeter method with H coil mode (“H coil method”) has been included for the magnetic field determination. International round robin tests of SST and Fe-based amorphous test specimens have been carried out, resulting in a suitable configuration of the SST for amorphous material. The single-yoke concept was adopted in order to avoid the effect of the impact of the upper yoke caused by the high magneto-elastic sensitivity of the material.

[1] Numbers in square brackets refer to the Bibliography.

Documents
Document Sharing Hub
Full document details: IEC 60404-16 2018

MAGNETIC MATERIALS –

Part 16: Methods of measurement of the magnetic properties of Fe-based amorphous strip by means of a single sheet tester

1 Scope

This part of IEC 60404 is applicable to Fe-based amorphous strips specified in IEC 60404-8-11 for the measurement of AC magnetic properties at frequencies up to 400 Hz.

The object of this part is to define the general principles and technical details of the measurement of the magnetic properties of Fe-based amorphous strips by means of a single sheet tester.

The single sheet tester is applicable to test specimens obtained from Fe-based amorphous strips of any quality. The AC magnetic characteristics are determined for a sinusoidal induced voltage, for specified peak values of magnetic polarization and for a specified frequency.

The measurements are made at an ambient temperature of (23 ± 5) °C on test specimens which have first been demagnetized.

NOTE 1 The single sheet tester specified in this document is appropriate for other materials which have magnetic properties and physical characteristics similar to those of Fe-based amorphous strip, such as nano-crystalline soft magnetic strip. The single sheet tester for electrical steel sheets is specified in IEC 60404-3.

NOTE 2 Throughout this document the term “magnetic polarization” is used as described in IEC 60050-121. In some standards of the IEC 60404 series, the term “magnetic flux density” is used.

2 Normative references

The following documents are referred to in the text in such a way that some or all of their content constitutes requirements of this document. For dated references, only the edition cited applies. For undated references, the latest edition of the referenced document (including any amendments) applies.

IEC 60050-121, *International Electrotechnical Vocabulary – Part 121: Electromagnetism*

IEC 60050-221, *International Electrotechnical Vocabulary – Chapter 221: Magnetic materials and components*

IEC 60404-8-11, *Magnetic materials – Part 8-11: Specifications for individual materials – Fe-based amorphous strip delivered in the semi-processed state*

3 Terms and definitions

For the purposes of this document, the terms and definitions given in IEC 60050-121 and IEC 60050-221 apply.

ISO and IEC maintain terminological databases for use in standardization at the following addresses:

- IEC Electropedia: available at http://www.electropedia.org/
- ISO Online browsing platform: available at http://www.iso.org/obp

Documents
Document Sharing Hub

Full document details: IEC 60404-16 2018

4 General principles

4.1 Principle of the method

This document applies the wattmeter method with H coil mode for the determination of the magnetic field strength (“H coil method”). The flux closure is made by a single “U”-shaped yoke.

The test specimen comprises a Fe-based amorphous strip, which is placed inside the following two windings:

– an exterior primary winding (magnetizing winding);

– an interior secondary winding (induced voltage winding).

A H coil that detects the magnetic field strength at the surface of the test specimen is placed under the test specimen.

The flux closure is made by a single vertical “U” shaped yoke, the cross-section of which is very large compared with that of the test specimen (see Figure 1).

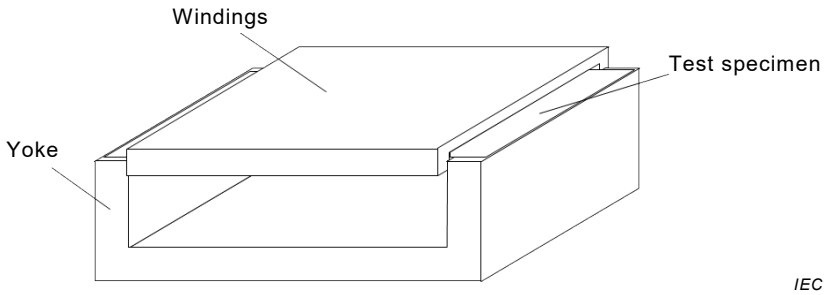

Figure 1 – Schematic diagram of the test apparatus

NOTE 1 Double yokes are unsuitable because the influence of the loading of an upper yoke on the test specimen is significant due to the large magnetostriction of the material. However, the upper yoke can be placed on the lower yoke in the absence of the test specimen to demagnetize yokes and to measure the power loss in the yokes.

The circuit diagram of Figure 2 illustrates the principle of the wattmeter method with H coil mode. The single sheet tester and the measuring instruments shall be connected as shown in Figure 2.

NOTE 2 Figure 2 also sets out the fundamentals of the widely used digital sampling technique, where the instrument functions are realised partly, or fully, through evaluating software. For the application of the digital sampling technique, see 4.6 and Annex B. Figure 2 does not show the feed-back circuit for the waveform control of the induced secondary voltage (see 4.4 and Annex C).

Documents
Document Sharing Hub
Full document details: IEC 60404-16 2018

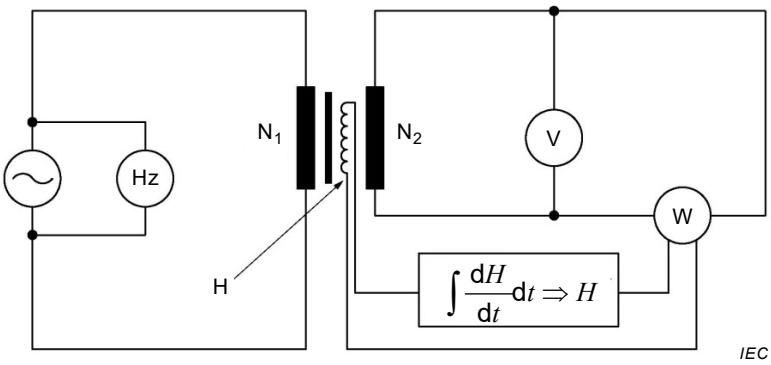

Key

~	power supply
Hz	frequency meter
N_1	primary winding
N_2	secondary winding
H	H coil
V	voltmeter
$\int \frac{dH}{dt} dt \Rightarrow H$	integrator
W	wattmeter

Figure 2 – Circuit of the wattmeter method with H coil mode

NOTE 3 The voltage induced in the H coil, $U_H(t)$, can be used for the air flux compensation in different ways (see 4.3.4 and Clause B.4) and for the digital sinusoidal waveform control of the induced secondary voltage, $U_2(t)$ (see 5.3 and Annex C) .

4.2 Test specimen

The test specimen shall be sampled in accordance with IEC 60404-8-11.

NOTE Nominal widths of Fe-based amorphous strip are 142,2 mm, 170,2 mm and 213,4 mm (see IEC 60404-8-11).

The length of the test specimen shall be no less than 280 mm, which is the outside dimension of the distance across the pole faces of the yoke. Although the part of the specimen situated outside the pole faces has no great influence on the measurement, this part shall not be longer than is necessary to facilitate insertion and removal of the test specimen.

The test specimen shall be cut to length from Fe-based amorphous strip without the formation of excessive burrs or mechanical distortion. The test specimen shall be plane and rectangular.

The test specimen shall be prepared by a magnetic anneal in a DC magnetic field directed parallel to the casting direction according to the instructions of the manufacturer. The test specimen shall be flat during the treatment.

Care shall be taken in handling the test specimen after the treatment in order to avoid raising fragments of the strip or creating mechanical stresses in the test specimen because the material is usually brittle after heat treatment.

4.3 Test apparatus

4.3.1 General

The test apparatus comprises the windings and the yoke (see Figure 1).

Documents
Document Sharing Hub
Full document details: IEC 60404-16 2018

Care shall be taken to ensure that temperature changes are kept below a level likely to produce stress in the test specimen due to the distribution of thermal expansion or contraction.

4.3.2 Yoke

The yoke is in the form of a letter U built by using soft ferrite (see Figure 3). It should have a low magnetic remanence, a low reluctance and a specific total loss as low as possible.

NOTE 1 Lower quality of yoke materials can lead to poor measurement quality and to misleading results of the magnetic properties of the test specimen accordingly (see Annex A).

Dimensions in millimetres

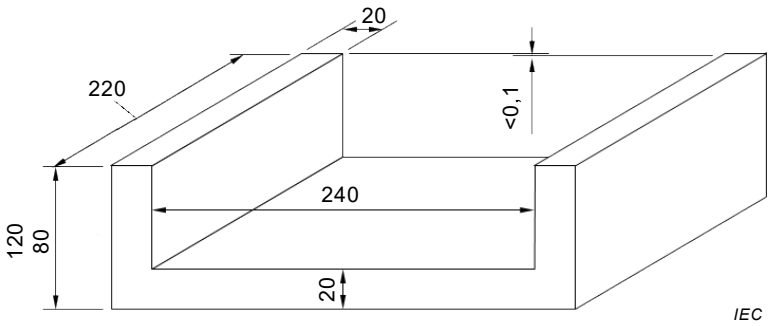

Figure 3 – Yoke dimensions

The yoke shall have pole faces having a width of 20 mm ± 1 mm.

The two pole faces of the yoke shall be as flat as possible and coplanar to within 0,1 mm. Also, the yoke shall be rigid in order to avoid creating mechanical stresses in the test specimen.

The height of the yoke shall be between 80 mm and 120 mm. The yoke shall have a width of 220 mm ± 1 mm and an inside length of 240 mm ± 1 mm (see Figure 3).

Other yoke dimensions may be used provided that comparability of the results can be demonstrated.

NOTE 2 The power loss dissipated in the yoke can be measured by making a magnetic closure circuit consisting of the yoke and a matching upper yoke that are wound with primary and secondary windings; 25 turns are sufficient for each winding.

There shall be a specimen support, which is made of non-conductive and non-magnetic materials, between the vertical limbs of the yokes. The surface of the support, on which the test specimen is supported, shall be in the same plane with the pole faces so that the test specimen can contact the pole faces with minimum air gaps.

NOTE 3 If there are steps between the surface of the test support plane and the pole faces, deteriorated magnetic properties are measured.

4.3.3 Windings

The primary winding shall be at least 230 mm in length. The secondary winding shall be 120 mm ± 1 mm in length and centred in the primary winding. The primary and secondary windings shall be wound on a non-conducting, non-magnetic and rectangular former. The dimensions of the former shall be as follows:

– length for winding: 235 mm ± 5 mm;
– internal height: 3 mm ± 1 mm;
– external height: ≤ 15 mm; the value of 12 mm is recommended.

Documents
Document Sharing Hub
Full document details: IEC 60404-16 2018

The primary winding can be made up of a single continuous and uniform winding taking up the whole length. One example of the winding is made up of 220 turns of copper wire 1 mm in diameter taking up the whole length, wound in one or more layers.

The secondary winding shall be made up of a single continuous and uniform winding taking up the length of 120 mm ± 1 mm, wound in one layer. The number of turns on the secondary winding depends on the characteristics of the measuring instruments.

The H coil shall have the same length as the secondary winding and be centred in the primary winding. The H coil shall be wound on a non-conducting, non-magnetic and rectangular plate. The width of the plate shall be 120 mm ± 1 mm and the height of the plate shall be 3 mm ± 0,2 mm.

The H coil shall be embedded in the specimen support plate and the distance between the upper surface of the support plate and the upper surface of the H coil shall be 1 mm ± 0,2 mm.

The area-turns of the H coil shall be calibrated in a uniform field using a solenoid coil of a diameter and length large enough to obtain a uniform field over the volume of the H coil.

4.3.4 Air flux compensation

Compensation of the effect of air flux on the induced secondary voltage shall be made.

This can be achieved, for example, by the numerical air flux compensation method (see Clause B.4).

4.3.5 Magnetic shielding

A simple magnetic shielding of the single sheet tester is recommended to weaken sufficiently the effects of geomagnetic and other external magnetic fields in order to avoid unexpected magnetization of the test apparatus (see Annex A).

4.4 Power supply

The power supply should consist of a computer-controlled arbitrary signal generator and a power amplifier, or an instrument integrating both of these functions (see Figure 4).

The arbitrary signal generator shall synthesize a signal of magnetizing waveform, amplitude and frequency data, which are programmed externally. A low pass filter should be inserted between the arbitrary signal generator and the power amplifier to prevent aliasing at the measuring instruments.

The frequency shall be measured with an accuracy of ±0,1 % or better.

The waveform of the induced secondary voltage shall be maintained as sinusoidal as possible. It is preferable not only to maintain the form factor of the induced secondary voltage to within 1,111 with a relative tolerance of ±1 %, but also to suppress harmonic contents in the induced secondary voltage to as low as possible. This can be achieved by various means, using analogue feedback control or by digital means described in Annex C.

The power amplifier shall be of low internal impedance and shall be highly stable in terms of voltage and frequency, being with sufficiently low voltage noise. During the measurement, the voltage and frequency shall be maintained constant within ±0,2 %.

The power amplifier should be a bipolar type with low noise and wide ranges of frequency and voltage.

Documents
Document Sharing Hub
Full document details: IEC 60404-16 2018

4.5 Measuring instruments

The measuring instruments shall meet the following specifications: The power shall be measured with an accuracy of ±0,5 % or better at the actual power factor and crest factor. The voltages shall be measured with an accuracy of ±0,5 % or better.

4.6 Digital sampling technique

The fundamental circuit of the digital sampling technique, almost exclusively used for this kind of measurement, is shown in Figure 4, in this case employing the H coil combined with the integrator for the determination of the magnetic field strength (for technical details see also Annex B). The measuring instrument is usually composed of preamplifiers, a digitizer and a digital signal calculator, and provides the functions of the wattmeter and voltmeter shown in Figure 2 in the software.

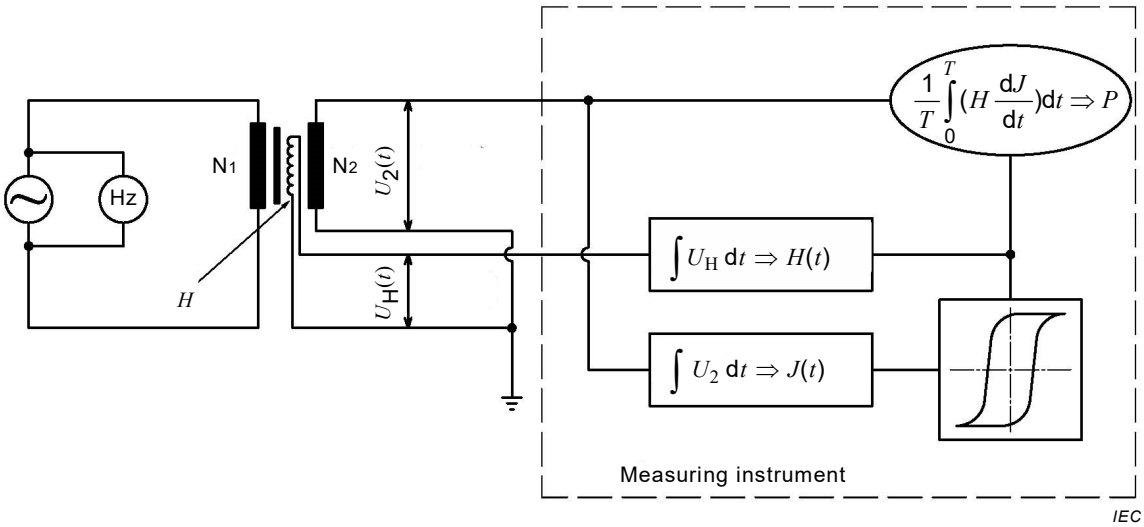

Key

~	power supply
Hz	frequency meter
N_1	primary winding
N_2	secondary winding
H	H coil
$U_2(t)$	voltage induced in the secondary winding
$U_H(t)$	voltage induced in the H coil
$\int U_H dt \Rightarrow H(t)$	H-integrator function of software
$\int U_2 dt \Rightarrow J(t)$	J-integrator function of software
$\frac{1}{T}\int_0^T (H \frac{dJ}{dt}) dt \Rightarrow P$	wattmeter and voltmeter functions of software

Figure 4 – Circuit of the wattmeter method with H coil mode adopting the digital sampling technique

NOTE 1 The numerical air flux compensation, $J = B - \mu_0 \times H$, is not presented in Figure 4 but is included in the software, see 4.3.4. Figure 4 does also not show the possible analogue feed-back circuit for the waveform control of the induced secondary voltage (see 4.4). The waveform control can also be managed by digital means (see the paragraph before the last one in 4.6 and Annex C).

The following signals shall be measured:

Documents
Document Sharing Hub
Full document details: IEC 60404-16 2018

– the voltage induced in the secondary winding, $U_2(t)$;
– the voltage induced in the H coil, $U_H(t)$;

The data set of signals $U_H(t)$ and $U_2(t)$ sampled over one period of magnetization provides the complete information for one measurement.

The magnetic field strength $H(t)$, the magnetic polarization $J(t)$, the specific total loss P_s and the specific apparent power S_s shall be calculated from $U_H(t)$ and $U_2(t)$ by the function of the field measuring devices and the wattmeter in the measuring instrument, see Clause 6.

The measuring instrument using the digital sampling technique is comprised of calibrated preamplifiers for each signal channel, a calibrated digitizer and a digital signal calculator. The measuring instrument has two independent signal channels corresponding to $U_2(t)$ and $U_H(t)$ working simultaneously with a sampling clock that is synchronized with the readout clock of the arbitrary signal generator. Unsynchronized sampling is also used; however, a higher sampling rate is then required to achieve the same accuracy (see Annex B).

The signal channels shall have sufficiently high input impedance (typically > 1 MΩ in parallel with about 100 pF) to avoid the load on the secondary winding. The phase shift difference between the channels shall be sufficiently small even at the lowest power factor.

The digital signal calculator calculates the magnetic properties through the evaluating software.

The digital signal calculator may create the digital feedback signal to feed into the arbitrary signal generator for the sinusoidal waveform control of the magnetic polarization by digital means (see Annex C).

The instrument specifications established in 4.5 shall also be applied to the digital sampling technique.

NOTE 2 For the technical details and requirements of the digital sampling technique, see Annex B.

5 Measurement procedure

5.1 Principle of measurement

The apparatus and the windings shall be connected as shown in Figure 2 or Figure 4, as applicable.

If the digital sampling technique is employed, the voltage induced in the secondary winding $U_2(t)$ and the voltage induced in the H coil $U_H(t)$ shall be measured as time functional signals.

The magnetic field strength $H(t)$, the magnetic polarization $J(t)$, the specific total loss P_s and the specific apparent power S_s shall be calculated from $U_H(t)$ and $U_2(t)$.

NOTE For the technical details and requirements of the digital sampling technique, see Annex B.

5.2 Preparation of measurement

The length of the test specimen and its mass shall be measured with an accuracy of ±0,1 %. The test specimen shall be loaded and centred on the longitudinal and transverse axes of the windings.

The cross-sectional area of the test specimen shall be calculated from Formula (1).

Documents
Document Sharing Hub
Full document details: IEC 60404-16 2018

$$A = \frac{m}{l\rho_{\mathrm{m}}} \tag{1}$$

where

A is the cross-sectional area of the test specimen, in square metres;

m is the mass of the test specimen, in kilograms;

l is the length of the test specimen, in metres;

ρ_{m} is the density of the test material, in kilograms per cubic metre.

Prior to measurement, the test specimen shall be carefully demagnetized from well above the value of magnetic field strength to be measured, by slowly reducing the corresponding magnitude of the alternating magnetizing current to zero.

5.3 Adjustment of power supply

In practice, single or grouped peak values of magnetic polarization $\hat{J}$ and magnetic field strength $\hat{H}$ are set at a specified frequency.

For the measurements of the specific total loss P_{s}, the specific apparent power S_{s}, r.m.s. value of magnetic field strength $\tilde{H}$ and the peak value of the magnetic field strength $\hat{H}$, the peak value of magnetic polarization $\hat{J}$ shall be set by adjusting the power supply.

For the measurement of the peak value of magnetic polarization $\hat{J}$, the peak value of magnetic field strength $\hat{H}$ shall be set.

The values of $\hat{H}$ and $\hat{J}$ shall be calculated from $U_{\mathrm{H}}(t)$ and $U_2(t)$ measured over one or several periods of magnetization respectively, using formulas corresponding to Formulas (2) and (3), respectively.

The output of the power supply shall be slowly increased until $\hat{J}$ or $\hat{H}$ has reached the desired value. The output of the power supply shall not decrease during the measurement.

The waveform of the induced secondary voltage $U_2(t)$ should be checked to ensure that only the fundamental component is present. In addition, the shape of the hysteresis loop composed of $H(t)$ and $J(t)$ should be checked to ensure that a symmetrical loop is presented.

6 Determination of characteristics

6.1 Determination of the magnetic polarization

The magnetic polarization $J(t)$ shall be calculated from Formula (2).

$$J(t) = \frac{1}{N_2 A}\left\{\int_0^t U_2(\tau)\,\mathrm{d}\,\tau - \frac{1}{T}\int_0^T\left(\int_0^t U_2(\tau)\,\mathrm{d}\,\tau\right)\mathrm{d}\,t\right\} \tag{2}$$

where

$J(t)$ is the magnetic polarization, in teslas;

N_2 is the number of turns of the secondary winding;

A is the cross-sectional area of the test specimen, in square metres;

$U_2(t)$ is the induced secondary voltage, in volts;

τ is an auxiliary time variable.

Documents
Document Sharing Hub
Full document details: IEC 60404-16 2018

The second term in the brackets of Formula (2) is the time average over the length of a period which compensates for the integration constant.

6.2 Determination of the magnetic field strength

The magnetic field strength $H(t)$ shall be calculated from Formula (3).

$$H(t) = \frac{1}{\mu_0 \left(N_\mathrm{H} A_\mathrm{H} \right)} \left\{ \int_0^t U_\mathrm{H}(\tau) \mathrm{d}\tau - \frac{1}{T} \int_0^T \left(\int_0^t U_\mathrm{H}(\tau) \mathrm{d}\tau \right) \mathrm{d}t \right\} \tag{3}$$

where

$H(t)$ is the magnetic field strength, in amperes per metre;

μ_0 is the magnetic constant ($4\pi \times 10^{-7}$ henrys per metre);

$(N_\mathrm{H} A_\mathrm{H})$ is the area-turns of the H coil, in square metres;

$U_\mathrm{H}(t)$ is the voltage induced in the H coil, in volts;

τ is an auxiliary time variable.

The second term in the brackets of Formula (3) is the time average over the length of a period which compensates for the integration constant.

NOTE For the determination of the area-turns of H coil, see 4.3.3.

6.3 Determination of the specific total loss

The specific total loss P_s, corresponds to the area of the hysteresis loop formed by the magnetic field strength $H(t)$ and the magnetic polarization $J(t)$, and shall be calculated from Formula (4).

$$P_\mathrm{s} = \frac{f}{\rho_\mathrm{m}} \int_{t=0}^{T} H(t) \frac{\mathrm{d}J(t)}{\mathrm{d}t} dt = \frac{f}{\rho_\mathrm{m} N_2 A} \int_{t=0}^{T} H(t) U_\mathrm{2c}(t) \mathrm{d}t \tag{4}$$

where

P_s is the specific total loss of the test specimen, in watts per kilogram;

ρ_m is the conventional density of the test material, in kilograms per cubic metre;

f is the frequency of the magnetization, in hertz;

T is the magnetizing period where $T = 1/f$, in seconds;

N_2 is the number of turns of the secondary winding;

A is the cross-sectional area of the test specimen, in square metres;

$H(t)$ is the magnetic field strength, in amperes per metre;

$J(t)$ is the magnetic polarization, in teslas;

$U_\mathrm{2c}(t)$ is the air flux compensated induced secondary voltage, in volts.

NOTE 1 For the air flux compensation, $J = B - \mu_0 \times H$, see 4.3.4.

NOTE 2 In the first integral of Formula (4), $\int_{t=0}^{T} H(t) \frac{\mathrm{d}J(t)}{\mathrm{d}t} dt$, B was replaced by J because the contribution of the air flux, the integral $\int_{t=0}^{T} H(t) \frac{\mu_0 \mathrm{d}H(t)}{\mathrm{d}t} dt$, is zero.

Documents
Document Sharing Hub
Full document details: IEC 60404-16 2018

6.4 Determination of the specific apparent power

The specific apparent power S_s shall be calculated from Formula (5).

$$S_s = 2\pi f \frac{1}{\rho_m} \tilde{H} \cdot \tilde{J} \tag{5}$$

where

S_s is the specific apparent power of the test specimen, in volt-amperes per kilogram;

f is the frequency of the magnetization, in hertz;

ρ_m is the conventional density of the test material, in kilograms per cubic metres;

$\tilde{H}$ is the r.m.s. value of magnetic field strength $H(t)$, in amperes per metre;

$\tilde{J}$ is the r.m.s. value of magnetic polarization $J(t)$, in teslas.

7 Reproducibility

The reproducibility of this method using the test apparatus defined above is characterized by a relative standard deviation of 3 % or less for the specific total loss at 1,3 T and 1,4 T, about 1 % for the peak value of magnetic polarization at 80 A/m, and about 6 % for the specific apparent power at 1,3 T and 1,4 T.

Documents
Document Sharing Hub

Full document details: IEC 60404-16 2018