IEC 60404-9

Edition 2.0 2018-11

INTERNATIONAL STANDARD

NORME INTERNATIONALE

colour inside

Magnetic materials –
Part 9: Methods of determination of the geometrical characteristics of electrical steel strip and sheet

Matériaux magnétiques –
Partie 9: Méthodes de détermination des caractéristiques géométriques des bandes et tôles magnétiques en acier

IEC 60404-9:2018-11(en-fr)

Documents
Document Sharing Hub

Full document details: IEC 60404-9-2018

THIS PUBLICATION IS COPYRIGHT PROTECTED
Copyright © 2018 IEC, Geneva, Switzerland

All rights reserved. Unless otherwise specified, no part of this publication may be reproduced or utilized in any form or by any means, electronic or mechanical, including photocopying and microfilm, without permission in writing from either IEC or IEC's member National Committee in the country of the requester. If you have any questions about IEC copyright or have an enquiry about obtaining additional rights to this publication, please contact the address below or your local IEC member National Committee for further information.

Droits de reproduction réservés. Sauf indication contraire, aucune partie de cette publication ne peut être reproduite ni utilisée sous quelque forme que ce soit et par aucun procédé, électronique ou mécanique, y compris la photocopie et les microfilms, sans l'accord écrit de l'IEC ou du Comité national de l'IEC du pays du demandeur. Si vous avez des questions sur le copyright de l'IEC ou si vous désirez obtenir des droits supplémentaires sur cette publication, utilisez les coordonnées ci-après ou contactez le Comité national de l'IEC de votre pays de résidence.

IEC Central Office
3, rue de Varembé
CH-1211 Geneva 20
Switzerland

Tel.: +41 22 919 02 11
info@iec.ch
www.iec.ch

About the IEC
The International Electrotechnical Commission (IEC) is the leading global organization that prepares and publishes International Standards for all electrical, electronic and related technologies.

About IEC publications
The technical content of IEC publications is kept under constant review by the IEC. Please make sure that you have the latest edition, a corrigenda or an amendment might have been published.

IEC Catalogue - webstore.iec.ch/catalogue
The stand-alone application for consulting the entire bibliographical information on IEC International Standards, Technical Specifications, Technical Reports and other documents. Available for PC, Mac OS, Android Tablets and iPad.

IEC publications search - webstore.iec.ch/advsearchform
The advanced search enables to find IEC publications by a variety of criteria (reference number, text, technical committee,…). It also gives information on projects, replaced and withdrawn publications.

IEC Just Published - webstore.iec.ch/justpublished
Stay up to date on all new IEC publications. Just Published details all new publications released. Available online and also once a month by email.

Electropedia - www.electropedia.org
The world's leading online dictionary of electronic and electrical terms containing 21 000 terms and definitions in English and French, with equivalent terms in 16 additional languages. Also known as the International Electrotechnical Vocabulary (IEV) online.

IEC Glossary - std.iec.ch/glossary
67 000 electrotechnical terminology entries in English and French extracted from the Terms and Definitions clause of IEC publications issued since 2002. Some entries have been collected from earlier publications of IEC TC 37, 77, 86 and CISPR.

IEC Customer Service Centre - webstore.iec.ch/csc
If you wish to give us your feedback on this publication or need further assistance, please contact the Customer Service Centre: sales@iec.ch.

A propos de l'IEC
La Commission Electrotechnique Internationale (IEC) est la première organisation mondiale qui élabore et publie des Normes internationales pour tout ce qui a trait à l'électricité, à l'électronique et aux technologies apparentées.

A propos des publications IEC
Le contenu technique des publications IEC est constamment revu. Veuillez vous assurer que vous possédez l'édition la plus récente, un corrigendum ou amendement peut avoir été publié.

Catalogue IEC - webstore.iec.ch/catalogue
Application autonome pour consulter tous les renseignements bibliographiques sur les Normes internationales, Spécifications techniques, Rapports techniques et autres documents de l'IEC. Disponible pour PC, Mac OS, tablettes Android et iPad.

Recherche de publications IEC - webstore.iec.ch/advsearchform

La recherche avancée permet de trouver des publications IEC en utilisant différents critères (numéro de référence, texte, comité d'études,…). Elle donne aussi des informations sur les projets et les publications remplacées ou retirées.

IEC Just Published - webstore.iec.ch/justpublished

Restez informé sur les nouvelles publications IEC. Just Published détaille les nouvelles publications parues. Disponible en ligne et aussi une fois par mois par email.

Electropedia - www.electropedia.org

Le premier dictionnaire en ligne de termes électroniques et électriques. Il contient 21 000 termes et définitions en anglais et en français, ainsi que les termes équivalents dans 16 langues additionnelles. Egalement appelé Vocabulaire Electrotechnique International (IEV) en ligne.

Glossaire IEC - std.iec.ch/glossary
67 000 entrées terminologiques électrotechniques, en anglais et en français, extraites des articles Termes et Définitions des publications IEC parues depuis 2002. Plus certaines entrées antérieures extraites des publications des CE 37, 77, 86 et CISPR de l'IEC.

Service Clients - webstore.iec.ch/csc

Si vous désirez nous donner des commentaires sur cette publication ou si vous avez des questions contactez-nous: sales@iec.ch.

Documents
Document Sharing Hub

Full document details: IEC 60404-9-2018

IEC 60404-9

Edition 2.0 2018-11

INTERNATIONAL STANDARD

NORME INTERNATIONALE

colour inside

Magnetic materials –
Part 9: Methods of determination of the geometrical characteristics of electrical steel strip and sheet

Matériaux magnétiques –
Partie 9: Méthodes de détermination des caractéristiques géométriques des bandes et tôles magnétiques en acier

INTERNATIONAL
ELECTROTECHNICAL
COMMISSION

COMMISSION
ELECTROTECHNIQUE
INTERNATIONALE

ICS 29.030; 77.140.50

ISBN 978-2-8322-6296-2

Warning! Make sure that you obtained this publication from an authorized distributor.
Attention! Veuillez vous assurer que vous avez obtenu cette publication via un distributeur agréé.

AVA Documents
Document Sharing Hub

® Registered trademark of the International Electrotechnical Commission
Marque déposée de la Commission Electrotechnique Internationale

Full document details: IEC 60404-9-2018

CONTENTS

FOREWORD 3
1 Scope 5
2 Normative references 5
3 Terms and definitions 5
4 Measurement and test methods 6
4.1 Edge wave (wave factor) 6
4.1.1 Test specimen 6
4.1.2 Measuring procedure 6
4.2 Residual curvature 7
4.2.1 General 7
4.2.2 Horizontal method 8
4.2.3 Vertical method 8
4.3 Edge camber 9
4.3.1 Test specimen 9
4.3.2 Measuring procedure 9
4.4 Deviation from the shearing line (internal stress) 10
4.4.1 Test specimen 10
4.4.2 Measuring procedure 10
4.5 Burr height 11
4.5.1 Test specimen 11
4.5.2 Measuring procedure 11
5 Test report 14
Annex A (informative) Examples of the clamping system 15
Bibliography 17

Figure 1 – Example of test specimen with edge waves placed on a surface plate 7
Figure 2 – Verification of the wave factor (w) 7
Figure 3 – Verification of the residual curvature (horizontal method) 8
Figure 4 – Verification of the residual curvature (vertical method) 9
Figure 5 – Verification of the edge camber 10
Figure 6 – Verification of the deviation from the shearing line (internal stress) 11
Figure 7 – Example of the burr height (h_b) 12
Figure 8 – Apparatus for measuring burr height using a linear measuring device 13
Figure 9 – Position of the moving anvil 13
Figure A.1 – An example of the clamping system (type A) 15
Figure A.2 – An example of the clamping system (type B) 16

Documents
Document Sharing Hub
Full document details: IEC 60404-9-2018

INTERNATIONAL ELECTROTECHNICAL COMMISSION

MAGNETIC MATERIALS –

Part 9: Methods of determination of the geometrical characteristics of electrical steel strip and sheet

FOREWORD

1) The International Electrotechnical Commission (IEC) is a worldwide organization for standardization comprising all national electrotechnical committees (IEC National Committees). The object of IEC is to promote international co-operation on all questions concerning standardization in the electrical and electronic fields. To this end and in addition to other activities, IEC publishes International Standards, Technical Specifications, Technical Reports, Publicly Available Specifications (PAS) and Guides (hereafter referred to as "IEC Publication(s)"). Their preparation is entrusted to technical committees; any IEC National Committee interested in the subject dealt with may participate in this preparatory work. International, governmental and non-governmental organizations liaising with the IEC also participate in this preparation. IEC collaborates closely with the International Organization for Standardization (ISO) in accordance with conditions determined by agreement between the two organizations.
2) The formal decisions or agreements of IEC on technical matters express, as nearly as possible, an international consensus of opinion on the relevant subjects since each technical committee has representation from all interested IEC National Committees.
3) IEC Publications have the form of recommendations for international use and are accepted by IEC National Committees in that sense. While all reasonable efforts are made to ensure that the technical content of IEC Publications is accurate, IEC cannot be held responsible for the way in which they are used or for any misinterpretation by any end user.
4) In order to promote international uniformity, IEC National Committees undertake to apply IEC Publications transparently to the maximum extent possible in their national and regional publications. Any divergence between any IEC Publication and the corresponding national or regional publication shall be clearly indicated in the latter.
5) IEC itself does not provide any attestation of conformity. Independent certification bodies provide conformity assessment services and, in some areas, access to IEC marks of conformity. IEC is not responsible for any services carried out by independent certification bodies.
6) All users should ensure that they have the latest edition of this publication.
7) No liability shall attach to IEC or its directors, employees, servants or agents including individual experts and members of its technical committees and IEC National Committees for any personal injury, property damage or other damage of any nature whatsoever, whether direct or indirect, or for costs (including legal fees) and expenses arising out of the publication, use of, or reliance upon, this IEC Publication or any other IEC Publications.
8) Attention is drawn to the Normative references cited in this publication. Use of the referenced publications is indispensable for the correct application of this publication.
9) Attention is drawn to the possibility that some of the elements of this IEC Publication may be the subject of patent rights. IEC shall not be held responsible for identifying any or all such patent rights.

International Standard IEC 60404-9 has been prepared by IEC technical committee 68: Magnetic alloys and steels.

This second edition cancels and replaces the first published in 1987. This edition constitutes a technical revision.

This edition includes the following significant technical changes with respect to the previous edition:

a) revision of terms and definitions;
b) specification of the length of test specimens for the determinations of edge wave (wave factor) and edge camber;
c) addition of the horizontal method for the determination of residual curvature, and a note that informs about a safety concern of the vertical method;
d) clarification that the burr height was characterized by the maximum value;

Documents
Document Sharing Hub

e) addition of the measuring procedure using a hand-held micrometer to determine the burr height.

The text of this International Standard is based on the following documents:

CDV	Report on voting
68/597/CDV	68/607/RVC

Full information on the voting for the approval of this International Standard can be found in the report on voting indicated in the above table.

This document has been drafted in accordance with the ISO/IEC Directives, Part 2.

A list of all parts in the IEC 60404 series, published under the general title *Magnetic materials*, can be found on the IEC website.

The committee has decided that the contents of this document will remain unchanged until the stability date indicated on the IEC website under "http://webstore.iec.ch" in the data related to the specific document. At this date, the document will be

- reconfirmed,
- withdrawn,
- replaced by a revised edition, or
- amended.

IMPORTANT – The 'colour inside' logo on the cover page of this publication indicates that it contains colours which are considered to be useful for the correct understanding of its contents. Users should therefore print this document using a colour printer.

Documents
Document Sharing Hub

Full document details: IEC 60404-9-2018

MAGNETIC MATERIALS –

Part 9: Methods of determination of the geometrical characteristics of electrical steel strip and sheet

1 Scope

This part of IEC 60404 specifies the measurement and test methods for the determination of the following geometrical characteristics of electrical steel strip and sheet:

– edge wave (wave factor);
– residual curvature;
– edge camber;
– deviation from the shearing line (internal stress);
– burr height.

This document applies to electrical steel strip and sheet intended for the construction of magnetic circuits and corresponding to Classes B2, C21, C22 and C23 of IEC 60404-1.

2 Normative references

The following documents are referred to in the text in such a way that some or all of their content constitutes requirements of this document. For dated references, only the edition cited applies. For undated references, the latest edition of the referenced document (including any amendments) applies.

IEC 60050-121, *International Electrotechnical Vocabulary – Part 121: Electromagnetism*

IEC 60050-221, *International Electrotechnical Vocabulary – Chapter 221: Magnetic materials and components*

IEC 60404-1, *Magnetic materials – Part 1: Classification*

3 Terms and definitions

For the purposes of this document, the terms and definitions given in IEC 60050-121 and IEC 60050-221 and the following apply.

ISO and IEC maintain terminological databases for use in standardization at the following addresses:

- IEC Electropedia: available at http://www.electropedia.org/
- ISO Online browsing platform: available at http://www.iso.org/obp

3.1
edge wave
wave factor
variations of flatness of a length of strip or a sheet taking a form of waves at the slit edge of the product

Note 1 to entry: Edge wave is characterized by the wave factor which is the relation of the height of the wave to its length, expressed as a percentage.

AVA Documents
Document Sharing Hub

Full document details: IEC 60404-9-2018

3.2
residual curvature
variations of flatness of a length of strip or a sheet taking a permanent curvature in the rolling direction of the product

3.3
edge camber
greatest distance between a longitudinal edge of a length of strip or a sheet and the line joining the two extremities of the measured length of this edge

3.4
deviation from the shearing line
internal stress
greatest distance between corresponding points on the two sheared edges of a length of strip or a sheet sheared in the middle of the width, in parallel to the rolling direction of the product, which characterizes the internal stress of the materials

3.5
burr height
difference between the thicknesses of a length of strip or a sheet measured respectively at the slit edge and at a distance of 10 mm from this edge

4 Measurement and test methods

4.1 Edge wave (wave factor)

4.1.1 Test specimen

The test specimen shall consist of a length of strip or a sheet, the length of which is defined in the product standard. If it is not defined in the product standard, the length shall be 1 m. Its width shall be equal to the delivered width of the product. The axis of the test specimen shall be parallel to the rolling direction of the product.

4.1.2 Measuring procedure

The test specimen shall be placed on a surface plate which is sufficiently large so that the test specimen does not overhang the edges (see Figure 1). It shall then be lifted up on one edge and allowed to fall back. The height of the maximum wave (h) shall be measured by means of an instrument having a resolution of 0,1 mm or better. The length of the wave (l) shall be measured by means of an instrument having a resolution of 1 mm or better (see Figure 2). Only complete waves are taken into account.

Documents
Document Sharing Hub
Full document details: IEC 60404-9-2018

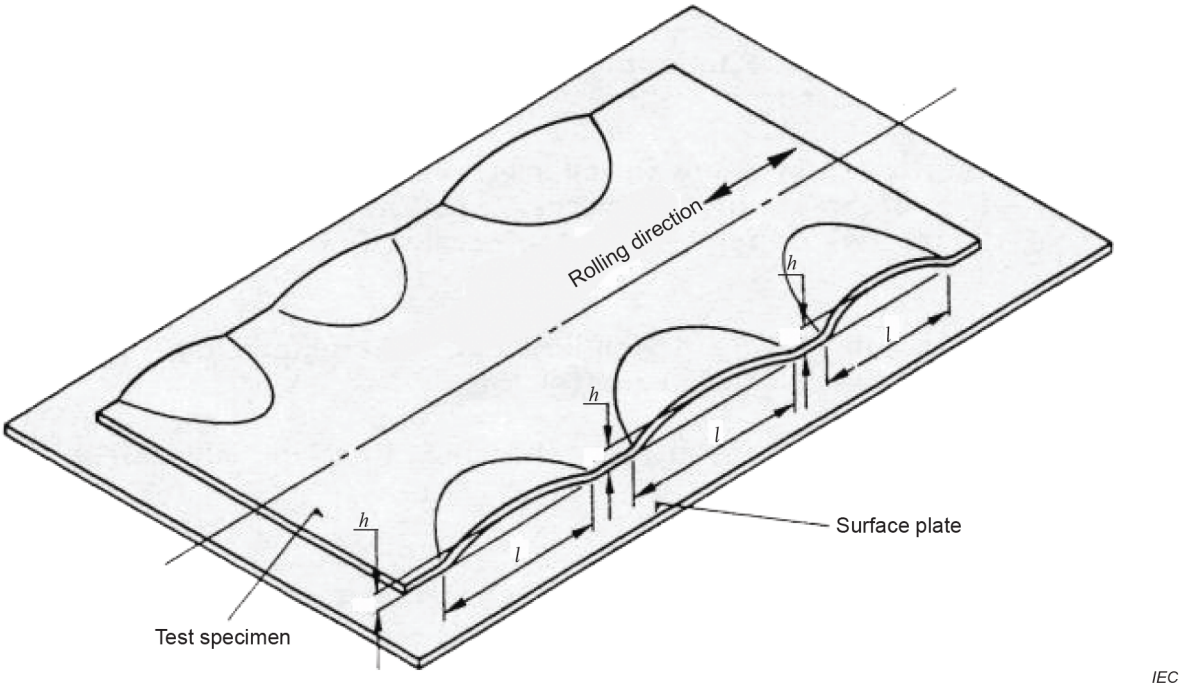

Figure 1 – Example of test specimen with edge waves placed on a surface plate

The wave factor (w) shall be determined as the ratio of the height of wave (h) to its length (l), expressed as a percentage (see Figure 2).

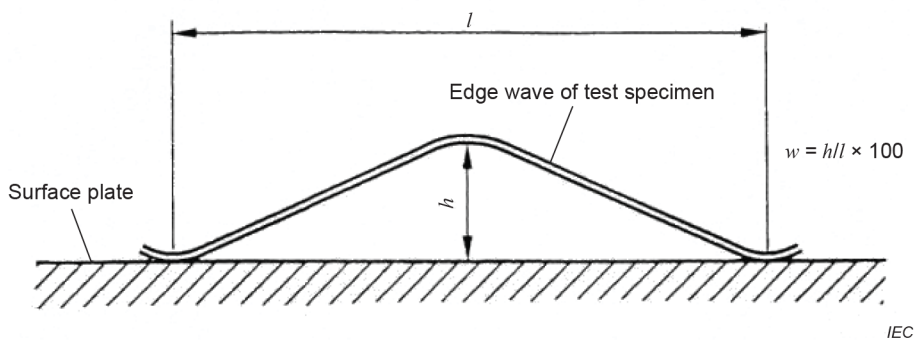

Figure 2 – Verification of the wave factor (w)

4.2 Residual curvature

4.2.1 General

Two methods for the determination of the residual curvature in the rolling direction of the product are described in this document: a horizontal method and a vertical method. The horizontal method is recommended from the aspect of worker's safety and consistency with ISO standards.

NOTE 1 The horizontal method is adopted in IEC 60404-8-5:1989 [2][a] and consistent with ISO 16162:2012 [5]. The vertical method is adopted in IEC 60404-8-4:2013 [1], IEC 60404-8-7:2017 [3] and IEC 60404-8-8:2017 [4].

[a] Numbers in square brackets refer to the Bibliography.

Documents
Document Sharing Hub
Full document details: IEC 60404-9-2018

Cut edges of the test specimen are usually sharp and should be handled with care. Test specimens in the delivery width of the product are sometimes heavy. Placing the test specimen vertically against a support plate according to the vertical method is rather hazardous for the operator compared with the horizontal method.

For the horizontal method, the maximum distance (d) between the test specimen and a surface plate, on which the test specimen is placed, shall be measured. For the vertical method, the maximum distance (a) between the bottom edge of the test specimen and a supporting plate shall be measured.

NOTE 2 Both the horizontal and vertical methods are applicable to test specimens obtained from electrical steel strips and sheets of any grade. These two methods give different values.

4.2.2 Horizontal method

4.2.2.1 Test specimen

The test specimen shall consist of a length of strip or a sheet, the length of which is defined in the product standard. If it is not defined in the product standard, the length shall be 1 m. Its width shall be equal to the delivered width of the product. The axis of the test specimen shall be parallel to the rolling direction of the product. The test specimen for the determination of edge wave (wave factor) may be used.

4.2.2.2 Measuring procedure

The test shall consist of placing the test specimen lying under its weight on a surface plate sufficiently large so that the test specimen does not overhang the edges (see Figure 1). The convex surface of the test specimen shall be in contact with the surface plate. The maximum distance (d) between the lower surface of the test specimen and the surface plate shall be measured by means of an instrument having a resolution of 1 mm or better (see Figure 3).

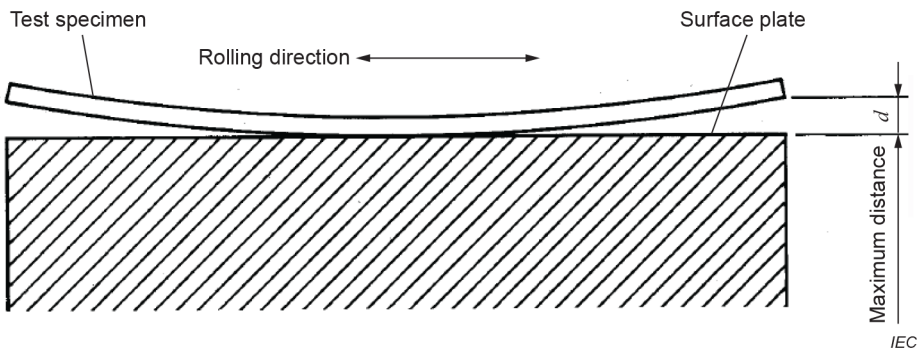

Figure 3 – Verification of the residual curvature (horizontal method)

4.2.3 Vertical method

4.2.3.1 Test specimen

The test specimen shall consist of a length of strip or a sheet, the length of which is defined in the product standard. If it is not defined in the product standard, the length shall be 500 mm. Its width shall be equal to the delivered width of the product. The axis of the test specimen shall be parallel to the rolling direction of the product.

4.2.3.2 Measuring procedure

The test shall consist of placing the test specimen vertically against a supporting plate. The top of the test specimen shall be held against the supporting plate over a clamping length of 30 mm with its convex surface facing the supporting plate. The maximum distance (a) between the bottom edge of the test specimen and the supporting plate shall then be measured at the axis of the test specimen by means of a graduated rule having a resolution of

AVA Documents Document Sharing Hub

1 mm or better (see Figure 4). The clamping force shall be sufficient to allow the full width of the test specimen to be in contact with the supporting plate.

NOTE Annex A gives examples of the clamping system.

Dimensions in millimetres

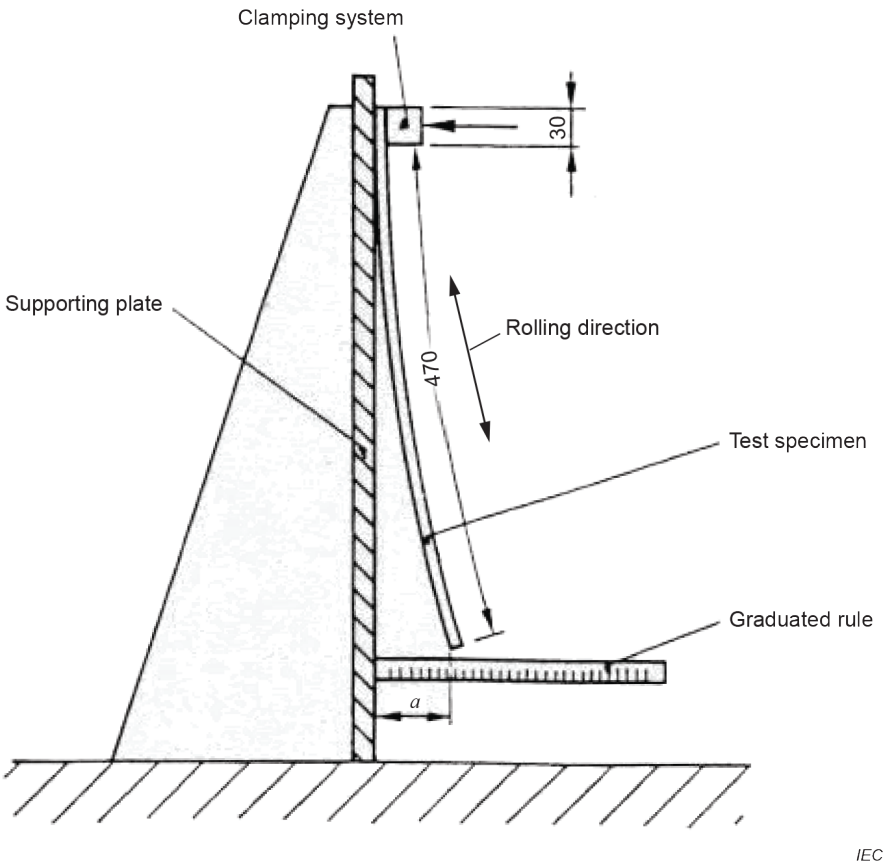

Figure 4 – Verification of the residual curvature (vertical method)

4.3 Edge camber

4.3.1 Test specimen

The test specimen shall consist of a length of strip or a sheet, the length of which is defined in the product standard. If it is not defined in the product standard, the length shall be 1 m. Its width shall be equal to the delivered width of the product. The axis of the test specimen shall be parallel to the rolling direction of the product. The test specimen for the determination of edge wave (wave factor) may be used.

4.3.2 Measuring procedure

The test specimen shall be placed on a surface plate (see Figure 1). A rule shall be placed in contact with the extremities of the concave side (see Figure 5). The maximum distance (e) between the edge and the rule shall be measured by means of an instrument having a resolution of 0,1 mm or better.

Documents
Document Sharing Hub
Full document details: IEC 60404-9-2018

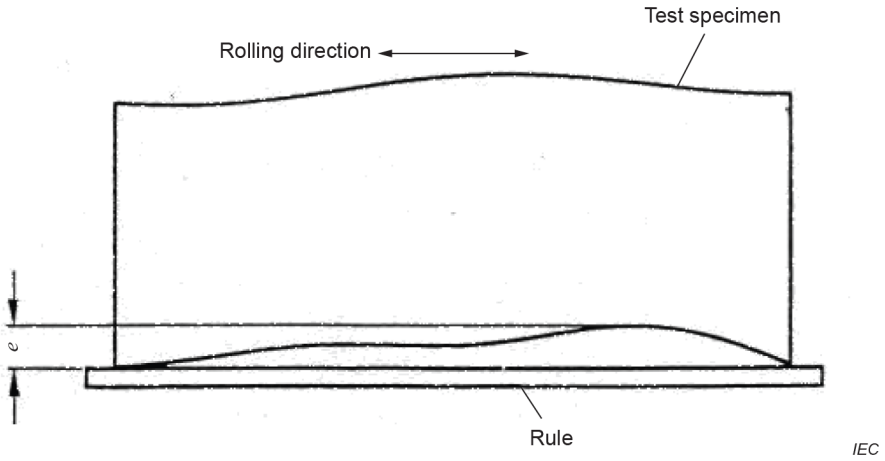

Figure 5 – Verification of the edge camber

4.4 Deviation from the shearing line (internal stress)

4.4.1 Test specimen

The test specimen shall consist of a length of strip or a sheet, the length of which is defined in the product standard. If it is not defined in the product standard, the length shall be 1 m. Its width shall be equal to the delivered width of the product. The axis of the test specimen shall be parallel to the rolling direction of the product. The test specimen for the determination of edge wave (wave factor) may be used.

4.4.2 Measuring procedure

The test specimen shall be sheared in the middle of the width, parallel to the rolling direction of the product. The two parts, neither of which shall be turned over, shall be weighted so that they remain flat on a surface plate. The two sheared edges shall then be brought together again so as to give the smallest gap (see Figure 6). The maximum distance (c) between the two sheared edges shall be measured by means of an instrument having a resolution of 0,1 mm or better.

Documents
Document Sharing Hub
Full document details: IEC 60404-9-2018