IEC 60424-2

Edition 2.0 2015-12

INTERNATIONAL STANDARD

NORME INTERNATIONALE

Withdrawn

Ferrite cores – Guidelines on the limits of surface irregularities – Part 2: RM-cores

Noyaux ferrites – Lignes directrices relatives aux limites des irrégularités de surface – Partie 2: Noyaux RM

IEC 60424-2:2015-12(en-fr)

Documents
Document Sharing Hub

Full document details: IEC 60424-2 2015

THIS PUBLICATION IS COPYRIGHT PROTECTED

Copyright © 2015 IEC, Geneva, Switzerland

All rights reserved. Unless otherwise specified, no part of this publication may be reproduced or utilized in any form or by any means, electronic or mechanical, including photocopying and microfilm, without permission in writing from either IEC or IEC's member National Committee in the country of the requester. If you have any questions about IEC copyright or have an enquiry about obtaining additional rights to this publication, please contact the address below or your local IEC member National Committee for further information.

Droits de reproduction réservés. Sauf indication contraire, aucune partie de cette publication ne peut être reproduite ni utilisée sous quelque forme que ce soit et par aucun procédé, électronique ou mécanique, y compris la photocopie et les microfilms, sans l'accord écrit de l'IEC ou du Comité national de l'IEC du pays du demandeur. Si vous avez des questions sur le copyright de l'IEC ou si vous désirez obtenir des droits supplémentaires sur cette publication, utilisez les coordonnées ci-après ou contactez le Comité national de l'IEC de votre pays de résidence.

IEC Central Office
3, rue de Varembé
CH-1211 Geneva 20
Switzerland

Tel.: +41 22 919 02 11
Fax: +41 22 919 03 00
info@iec.ch
www.iec.ch

About the IEC
The International Electrotechnical Commission (IEC) is the leading global organization that prepares and publishes International Standards for all electrical, electronic and related technologies.

About IEC publications
The technical content of IEC publications is kept under constant review by the IEC. Please make sure that you have the latest edition, a corrigenda or an amendment might have been published.

IEC Catalogue - webstore.iec.ch/catalogue
The stand-alone application for consulting the entire bibliographical information on IEC International Standards, Technical Specifications, Technical Reports and other documents. Available for PC, Mac OS, Android Tablets and iPad.

IEC publications search - www.iec.ch/searchpub
The advanced search enables to find IEC publications by a variety of criteria (reference number, text, technical committee,…). It also gives information on projects, replaced and withdrawn publications.

IEC Just Published - webstore.iec.ch/justpublished
Stay up to date on all new IEC publications. Just Published details all new publications released. Available online and also once a month by email.

Electropedia - www.electropedia.org
The world's leading online dictionary of electronic and electrical terms containing more than 30 000 terms and definitions in English and French, with equivalent terms in 15 additional languages. Also known as the International Electrotechnical Vocabulary (IEV) online.

IEC Glossary - std.iec.ch/glossary
More than 60 000 electrotechnical terminology entries in English and French extracted from the Terms and Definitions clause of IEC publications issued since 2002. Some entries have been collected from earlier publications of IEC TC 37, 77, 86 and CISPR.

IEC Customer Service Centre - webstore.iec.ch/csc
If you wish to give us your feedback on this publication or need further assistance, please contact the Customer Service Centre: csc@iec.ch.

A propos de l'IEC
La Commission Electrotechnique Internationale (IEC) est la première organisation mondiale qui élabore et publie des Normes internationales pour tout ce qui a trait à l'électricité, à l'électronique et aux technologies apparentées.

A propos des publications IEC
Le contenu technique des publications IEC est constamment revu. Veuillez vous assurer que vous possédez l'édition la plus récente, un corrigendum ou amendement peut avoir été publié.

Catalogue IEC - webstore.iec.ch/catalogue
Application autonome pour consulter tous les renseignements bibliographiques sur les Normes internationales, Spécifications techniques, Rapports techniques et autres documents de l'IEC. Disponible pour PC, Mac OS, tablettes Android et iPad.

Recherche de publications IEC - www.iec.ch/searchpub

La recherche avancée permet de trouver des publications IEC en utilisant différents critères (numéro de référence, texte, comité d'études,…). Elle donne aussi des informations sur les projets et les publications remplacées ou retirées.

IEC Just Published - webstore.iec.ch/justpublished

Restez informé sur les nouvelles publications IEC. Just Published détaille les nouvelles publications parues. Disponible en ligne et aussi une fois par mois par email.

Electropedia - www.electropedia.org

Le premier dictionnaire en ligne de termes électroniques et électriques. Il contient plus de 30 000 termes et définitions en anglais et en français, ainsi que les termes équivalents dans 15 langues additionnelles. Egalement appelé Vocabulaire Electrotechnique International (IEV) en ligne.

Glossaire IEC - std.iec.ch/glossary
Plus de 60 000 entrées terminologiques électrotechniques, en anglais et en français, extraites des articles Termes et Définitions des publications IEC parues depuis 2002. Plus certaines entrées antérieures extraites des publications des CE 37, 77, 86 et CISPR de l'IEC.

Service Clients - webstore.iec.ch/csc

Si vous désirez nous donner des commentaires sur cette publication ou si vous avez des questions contactez-nous: csc@iec.ch.

Withdrawn

Documents
Document Sharing Hub

Full document details: IEC 60424-2 2015

IEC 60424-2

Edition 2.0 2012

INTERNATIONAL STANDARD

NORME INTERNATIONALE

withdrawn

Ferrite cores – Guidelines on the limits of surface irregularities – Part 2: RM-cores

Noyaux ferrites – Lignes directrices relatives aux limites des irrégularités de surface – Partie 2: Noyaux RM

INTERNATIONAL
ELECTROTECHNICAL
COMMISSION

COMMISSION
ELECTROTECHNIQUE
INTERNATIONALE

ICS 29.100.10

ISBN 978-2-8322-3031-2

Warning! Make sure that you obtained this publication from an authorized distributor.
Attention! Veuillez vous assurer que vous avez obtenu cette publication via un distributeur agréé.

® Registered trademark of the International Electrotechnical Commission
Marque déposée de la Commission Electrotechnique Internationale

AVA Documents
Document Sharing Hub

Full document details: IEC 60424-2 2015

CONTENTS

FOREWORD 3
1 Scope 5
2 Normative references 5
3 Limits of surface irregularities 5
3.1 Visual inspection and recommended limits 5
3.2 Chips and ragged edges 6
3.2.1 Chips and ragged edges on mating surfaces 6
3.2.2 Chips and ragged edges on other surfaces 6
3.3 Cracks 9
3.4 Flash 10
3.5 Pull-outs 10
3.6 Crystallites 11
3.7 Pores 12
Bibliography 13

Figure 1 – Chips and ragged edges on mating surfaces 6
Figure 2 – Cracks location – Top view 9
Figure 3 – Cracks location – Bottom view 9
Figure 4 – Dimension *W* 10
Figure 5 – Flash and pull-out location 11
Figure 6 – Pull-out in clamping recess area 11
Figure 7 – Crystallites location for RM-core 11
Figure 8 – Pores location for RM-core 12

Table 1 – Relevant subclauses for given irregularity versus location 5
Table 2 – Allowable chipping areas 6
Table 3 – Area and length references for visual inspection 8
Table 4 – Limits for cracks 10
Table 5 – *W* dimensions 10

Withdrawn

Documents
Document Sharing Hub
Full document details: IEC 60424-2 2015

INTERNATIONAL ELECTROTECHNICAL COMMISSION

FERRITE CORES – GUIDELINES ON THE LIMITS OF SURFACE IRREGULARITIES –

Part 2: RM-cores

FOREWORD

1) The International Electrotechnical Commission (IEC) is a worldwide organization for standardization comprising all national electrotechnical committees (IEC National Committees). The object of IEC is to promote international co-operation on all questions concerning standardization in the electrical and electronic fields. To this end and in addition to other activities, IEC publishes International Standards, Technical Specifications, Technical Reports, Publicly Available Specifications (PAS) and Guides (hereafter referred to as "IEC Publication(s)"). Their preparation is entrusted to technical committees; any IEC National Committee interested in the subject dealt with may participate in this preparatory work. International, governmental and non-governmental organizations liaising with the IEC also participate in this preparation. IEC collaborates closely with the International Organization for Standardization (ISO) in accordance with conditions determined by agreement between the two organizations.
2) The formal decisions or agreements of IEC on technical matters express, as nearly as possible, an international consensus of opinion on the relevant subjects since each technical committee has representation from all interested IEC National Committees.
3) IEC Publications have the form of recommendations for international use and are accepted by IEC National Committees in that sense. While all reasonable efforts are made to ensure that the technical content of IEC Publications is accurate, IEC cannot be held responsible for the way in which they are used or for any misinterpretation by any end user.
4) In order to promote international uniformity, IEC National Committees undertake to apply IEC Publications transparently to the maximum extent possible in their national and regional publications. Any divergence between any IEC Publication and the corresponding national or regional publication shall be clearly indicated in the latter.
5) IEC itself does not provide any attestation of conformity. Independent certification bodies provide conformity assessment services and, in some areas, access to IEC marks of conformity. IEC is not responsible for any services carried out by independent certification bodies.
6) All users should ensure that they have the latest edition of this publication.
7) No liability shall attach to IEC or its directors, employees, servants or agents including individual experts and members of its technical committees and IEC National Committees for any personal injury, property damage or other damage of any nature whatsoever, whether direct or indirect, or for costs (including legal fees) and expenses arising out of the publication, use of, or reliance upon, this IEC Publication or any other IEC Publications.
8) Attention is drawn to the Normative references cited in this publication. Use of the referenced publications is indispensable for the correct application of this publication.
9) Attention is drawn to the possibility that some of the elements of this IEC Publication may be the subject of patent rights. IEC shall not be held responsible for identifying any or all such patent rights.

International Standard IEC 60424-2 has been prepared by technical committee 51: Magnetic components and ferrite materials.

This second edition cancels and replaces the first edition published in 1997. This edition constitutes a technical revision.

This edition includes the following significant technical changes with respect to the previous edition:

a) addition of crystallites in 3.6 and of pores in 3.7.

Withdrawn

Documents
Document Sharing Hub

Full document details: IEC 60424-2 2015

The text of this standard is based on the following documents:

FDIS	Report on voting
51/1108/FDIS	51/1122/RVD

Full information on the voting for the approval of this standard can be found in the report on voting indicated in the above table.

This publication has been drafted in accordance with the ISO/IEC Directives, Part 2.

A list of all parts in the IEC 60424 series, published under the general title *Ferrite cores – Guidelines on the limits of surface irregularities*, can be found on the IEC website.

Future standards in this series will carry the new general title as cited above. Titles of existing standards in this series will be updated at the time of the next edition.

The committee has decided that the contents of this publication will remain unchanged until the stability date indicated on the IEC website under "http://webstore.iec.ch" in the data related to the specific publication. At this date, the publication will be

- reconfirmed,
- withdrawn,
- replaced by a revised edition, or
- amended.

Withdrawn

Documents
Document Sharing Hub

Full document details: IEC 60424-2 2015

FERRITE CORES – GUIDELINES ON THE LIMITS OF SURFACE IRREGULARITIES –

Part 2: RM-cores

Withdrawn

1 Scope

This part of IEC 60424 provides guidelines on the allowable limits of surface irregularities applicable to RM-cores in accordance with the relevant generic specification.

This standard should be considered as a sectional specification useful in the negotiations between ferrite core manufacturers and customers about surface irregularities. Normative reference

2 Normative references

The following documents, in whole or in part, are normatively referenced in this document and are indispensable for its application. For dated references, only the edition cited applies. For undated references, the latest edition of the referenced document (including any amendments) applies.

3 Limits of surface irregularities

3.1 Visual inspection and recommended limits

To facilitate quick identification of recommended limits for a given irregularity based on its location, the following subclauses are summarized in Table 1.

Table 1 – Relevant subclauses for given irregularity versus location

Location	Type of irregularity	For limits, see
Mating surfaces	Chips Ragged edges Cracks	3.2.1 3.2.1 3.3
Centre-post	Chips Ragged edges Cracks	3.2.2 3.2.2 3.3
Outer walls	Chips Cracks	3.2.2 3.3
Back wall	Chips Ragged edges Cracks Pull-outs	3.2.2 3.2.2 3.3 3.5
Wire slot areas	Chips Ragged edges Flash	3.2.2 3.2.2 3.4
Wire way areas	Chips Ragged edges Flash	3.2.2 3.2.2 3.4
Clamping recess areas	Chips Ragged edges Pull-outs	3.2.2 3.2.2 3.5

AVA Documents
Document Sharing Hub

Full document details: IEC 60424-2 2015

3.2 Chips and ragged edges

3.2.1 Chips and ragged edges on mating surfaces

The areas of the chips located on the mating surfaces (C1, C1′ and C1″ irregularities in Figure 1) shall not exceed the following limits:

– the cumulative area of the chips shall be less than 4 % of the total mating surface;
– the total length of the ragged edges shall be less than 25 % of the perimeter of the relevant surface.

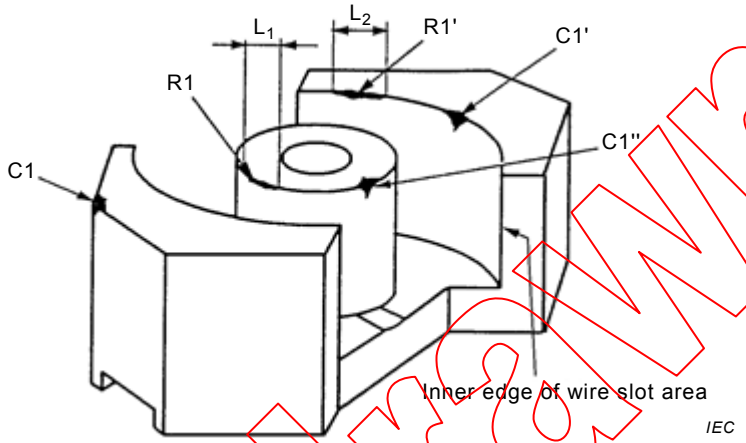

Key

C1, C1′, C1″: chip

R1, R1′: ragged edge

L_1, L_2: length of ragged edge

Figure 1 – Chips and ragged edges on mating surfaces

Allowable chipping areas for a given core are summarized in Table 2

Table 2 – Allowable chipping areas

Core size	Mating surfaces (mm²)	Other surfaces (mm²)
RM4/RM5	< 2	< 4
RM6/RM7	< 3	< 6
RM8	< 4,5	< 9
RM10	< 7	< 15
RM12	< 12,5	< 25
RM14	< 15	< 30
NOTE These limits are applicable to cores with and without a hole in the centre-post.		

3.2.2 Chips and ragged edges on other surfaces

The areas of the chips located on the other surfaces shall not exceed the following limits:

– The allowable chipping areas are doubled as compared to the limits for the mating surface (see Table 2).
– The rule for the ragged edges is the same as for the mating surface.
– Chips and ragged edges are not acceptable on the ridge of the clamping recess area.

Withdrawn

AVA Documents Document Sharing Hub

– Chips and ragged edges are not acceptable on the inner edges of the wire slot area (see Figure 1).

The area and length references for visual inspection are given in Table 3.

withdrawn

Documents
Document Sharing Hub

Full document details: IEC 60424-2 2015