IEC 60444-9

Edition 1.0 2007-02

INTERNATIONAL STANDARD

NORME INTERNATIONALE

Measurement of quartz crystal unit parameters – Part 9: Measurement of spurious resonances of piezoelectric crystal units

Mesure des paramètres des résonateurs à quartz – Partie 9: Mesure des résonances parasites des résonateurs piézoélectriques

IEC 60444-9:2007

Documents
Document Sharing Hub

Full document details: IEC 60444-9 2007

THIS PUBLICATION IS COPYRIGHT PROTECTED

Copyright © 2007 IEC, Geneva, Switzerland

All rights reserved. Unless otherwise specified, no part of this publication may be reproduced or utilized in any form or by any means, electronic or mechanical, including photocopying and microfilm, without permission in writing from either IEC or IEC's member National Committee in the country of the requester.
If you have any questions about IEC copyright or have an enquiry about obtaining additional rights to this publication, please contact the address below or your local IEC member National Committee for further information.

Droits de reproduction réservés. Sauf indication contraire, aucune partie de cette publication ne peut être reproduite ni utilisée sous quelque forme que ce soit et par aucun procédé, électronique ou mécanique, y compris la photocopie et les microfilms, sans l'accord écrit de la CEI ou du Comité national de la CEI du pays du demandeur.
Si vous avez des questions sur le copyright de la CEI ou si vous désirez obtenir des droits supplémentaires sur cette publication, utilisez les coordonnées ci-après ou contactez le Comité national de la CEI de votre pays de résidence.

IEC Central Office
3, rue de Varembé
CH-1211 Geneva 20
Switzerland

Tel.: +41 22 919 02 11
Fax: +41 22 919 03 00
info@iec.ch
www.iec.ch

About the IEC

The International Electrotechnical Commission (IEC) is the leading global organization that prepares and publishes International Standards for all electrical, electronic and related technologies.

About IEC publications

The technical content of IEC publications is kept under constant review by the IEC. Please make sure that you have the latest edition, a corrigenda or an amendment might have been published.

Useful links:

IEC publications search - www.iec.ch/searchpub

The advanced search enables you to find IEC publications by a variety of criteria (reference number, text, technical committee,…).
It also gives information on projects, replaced and withdrawn publications.

IEC Just Published - webstore.iec.ch/justpublished

Stay up to date on all new IEC publications. Just Published details all new publications released. Available on-line and also once a month by email.

Electropedia - www.electropedia.org

The world's leading online dictionary of electronic and electrical terms containing more than 30 000 terms and definitions in English and French, with equivalent terms in additional languages. Also known as the International Electrotechnical Vocabulary (IEV) on-line.

Customer Service Centre - webstore.iec.ch/csc

If you wish to give us your feedback on this publication or need further assistance, please contact the Customer Service Centre: csc@iec.ch.

A propos de la CEI

La Commission Electrotechnique Internationale (CEI) est la première organisation mondiale qui élabore et publie des Normes internationales pour tout ce qui a trait à l'électricité, à l'électronique et aux technologies apparentées.

A propos des publications CEI

Le contenu technique des publications de la CEI est constamment revu. Veuillez vous assurer que vous possédez l'édition la plus récente, un corrigendum ou amendement peut avoir été publié.

Liens utiles:

Recherche de publications CEI - www.iec.ch/searchpub

La recherche avancée vous permet de trouver des publications CEI en utilisant différents critères (numéro de référence, texte, comité d'études,…).
Elle donne aussi des informations sur les projets et les publications remplacées ou retirées.

Just Published CEI - webstore.iec.ch/justpublished

Restez informé sur les nouvelles publications de la CEI. Just Published détaille les nouvelles publications parues. Disponible en ligne et aussi une fois par mois par email.

Electropedia - www.electropedia.org

Le premier dictionnaire en ligne au monde de termes électroniques et électriques. Il contient plus de 30 000 termes et définitions en anglais et en français, ainsi que les termes équivalents dans les langues additionnelles. Egalement appelé Vocabulaire Electrotechnique International (VEI) en ligne.

Service Clients - webstore.iec.ch/csc

Si vous désirez nous donner des commentaires sur cette publication ou si vous avez des questions contactez-nous: csc@iec.ch.

Documents
Document Sharing Hub

Full document details: IEC 60444-9 2007

IEC 60444-9

Edition 1.0 2007-02

INTERNATIONAL STANDARD

NORME INTERNATIONALE

Measurement of quartz crystal unit parameters – Part 9: Measurement of spurious resonances of piezoelectric crystal units

Mesure des paramètres des résonateurs à quartz – Partie 9: Mesure des résonances parasites des résonateurs piézoélectriques

INTERNATIONAL ELECTROTECHNICAL COMMISSION

COMMISSION ELECTROTECHNIQUE INTERNATIONALE

PRICE CODE
CODE PRIX

P

ICS 31.140

ISBN 978-2-8322-0881-6

Warning! Make sure that you obtained this publication from an authorized distributor.
Attention! Veuillez vous assurer que vous avez obtenu cette publication via un distributeur agréé.

AVA Documents
Document Sharing Hub

® Registered trademark of the International Electrotechnical Commission
Marque déposée de la Commission Electrotechnique Internationale

Full document details: IEC 60444-9 2007

INTERNATIONAL ELECTROTECHNICAL COMMISSION

MEASUREMENT OF QUARTZ CRYSTAL UNIT PARAMETERS –

Part 9: Measurement of spurious resonances of piezoelectric crystal units

FOREWORD

1) The International Electrotechnical Commission (IEC) is a worldwide organization for standardization comprising all national electrotechnical committees (IEC National Committees). The object of IEC is to promote international co-operation on all questions concerning standardization in the electrical and electronic fields. To this end and in addition to other activities, IEC publishes International Standards, Technical Specifications, Technical Reports, Publicly Available Specifications (PAS) and Guides (hereafter referred to as "IEC Publication(s)"). Their preparation is entrusted to technical committees; any IEC National Committee interested in the subject dealt with may participate in this preparatory work. International, governmental and non-governmental organizations liaising with the IEC also participate in this preparation. IEC collaborates closely with the International Organization for Standardization (ISO) in accordance with conditions determined by agreement between the two organizations.
2) The formal decisions or agreements of IEC on technical matters express, as nearly as possible, an international consensus of opinion on the relevant subjects since each technical committee has representation from all interested IEC National Committees.
3) IEC Publications have the form of recommendations for international use and are accepted by IEC National Committees in that sense. While all reasonable efforts are made to ensure that the technical content of IEC Publications is accurate, IEC cannot be held responsible for the way in which they are used or for any misinterpretation by any end user.
4) In order to promote international uniformity, IEC National Committees undertake to apply IEC Publications transparently to the maximum extent possible in their national and regional publications. Any divergence between any IEC Publication and the corresponding national or regional publication shall be clearly indicated in the latter.
5) IEC provides no marking procedure to indicate its approval and cannot be rendered responsible for any equipment declared to be in conformity with an IEC Publication.
6) All users should ensure that they have the latest edition of this publication.
7) No liability shall attach to IEC or its directors, employees, servants or agents including individual experts and members of its technical committees and IEC National Committees for any personal injury, property damage or other damage of any nature whatsoever, whether direct or indirect, or for costs (including legal fees) and expenses arising out of the publication, use of, or reliance upon, this IEC Publication or any other IEC Publications.
8) Attention is drawn to the Normative references cited in this publication. Use of the referenced publications is indispensable for the correct application of this publication.
9) Attention is drawn to the possibility that some of the elements of this IEC Publication may be the subject of patent rights. IEC shall not be held responsible for identifying any or all such patent rights.

International Standard IEC 60444-9 has been prepared by IEC technical committee 49: Piezoelectric and dielectric devices for frequency control and selection.

This bilingual version (2013-08) corresponds to the monolingual English version, published in 2007-02.

The text of this standard is based on the following documents:

FDIS	Report on voting
49/764/FDIS	49/774/RVD

Full information on the voting for the approval of this standard can be found in the report on voting indicated in the above table.

The French version of this standard has not been voted upon.

Documents
Document Sharing Hub

Full document details: IEC 60444-9 2007

This publication has been drafted in accordance with the ISO/IEC Directives, Part 2.

A list of all parts of IEC 60444 series, published under the general title *Measurement of quartz crystal unit parameters,* can be found on the IEC website.

The committee has decided that the contents of this publication will remain unchanged until the maintenance result date indicated on the IEC web site under "http://webstore.iec.ch" in the data related to the specific publication. At this date, the publication will be

- reconfirmed,
- withdrawn,
- replaced by a revised edition, or
- amended.

Documents
Document Sharing Hub

Full document details: IEC 60444-9 2007

MEASUREMENT OF QUARTZ CRYSTAL UNIT PARAMETERS –

Part 9: Measurement of spurious resonances of piezoelectric crystal units

1 Scope

This part of IEC 60444 describes two methods for determining the spurious (unwanted) modes of piezoelectric crystal resonators. It extends the capabilities and improves the reproducibility and accuracy compared to previous methods.

The previous methods described in IEC 60283 (1968) were based on the use of a measuring bridge, which applies to non-traceable components such as variable resistors and a hybrid transformer, which are no longer commercially available.

Method A (Full parameter determination)

Full parameter determination allows the determination of the equivalent parameters of the spurious resonances and is based on the methods described in IEC 60444-5 using the same measurement equipment. It is the preferred method, which can be applied to the measurement of low and medium impedance spurious resonances up to several kΩ.

Method B (Resistance determination)

Resistance determination should be used for the determination of high impedance spurious resonances as specified, for example for certain filter crystals. It uses the same test equipment as method A in conjunction with a test fixture, which consists of commercially available microwave components such as a 180° hybrid coupler and a 10 dB attenuator, which are well-defined in a 50 Ω environment. This method is an improvement to the “reference method” of the obsolete IEC 60283.

2 Overview

Piezoelectric crystal units show multiple resonances, which can be electrically represented by a parallel connection of a number of series resonant circuits. The one-port equivalent circuit of the complete crystal unit is shown in Figure 1 (taken from IEC 60444-5).

Documents
Document Sharing Hub

Full document details: IEC 60444-9 2007

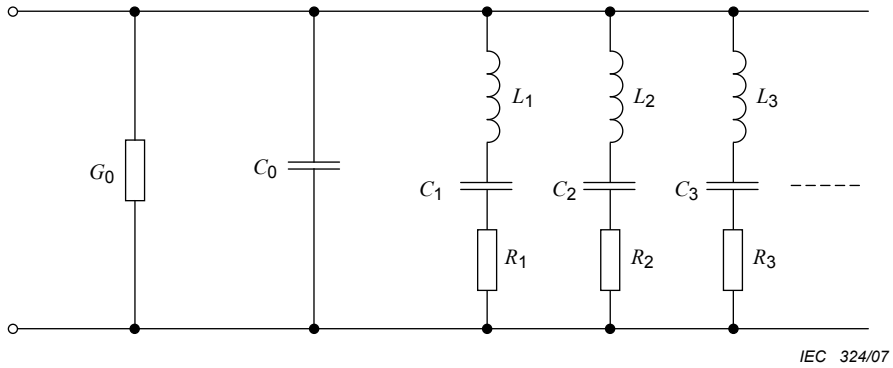

Figure 1 – General one-port equivalent circuit for multiple resonances

The total admittance Y_{tot} of the equivalent circuit for n resonance modes is therefore

$$Y_{tot} = G_0 + j\omega C_0 + \sum_i Y_i \tag{1}$$

with

$$Y_i = G_i + jB_i = \left(R_i + j\omega L_i + \frac{1}{j\omega C_i} \right)^{-1} \qquad (i = 1,2,\ldots n) \tag{2}$$

Index i = 1 represents the main mode, while i = 2 … n represents the spurious resonance modes.

The spurious modes are regarded as uncoupled modes. Coupled modes can also be found by the described test methods, however their strong amplitude dependence does not allow for the precise determination of their parameters.

The attenuation a^i_{spur}, of a spurious mode i, is defined as the logarithmic ratio (expressed in dB) of its resistance R_i, to the resistance R_1 of the main mode:

$$a^i_{spur} = 20 \cdot \log_{10} \left(\frac{R_i}{R_1} \right) \tag{3}$$

Figure 2 shows a typical spectrum for the spurious resonances of an AT-cut quartz crystal unit as displayed on a spectrum analyzer using a π-network according to IEC 60444-1.

Documents
Document Sharing Hub
Full document details: IEC 60444-9 2007

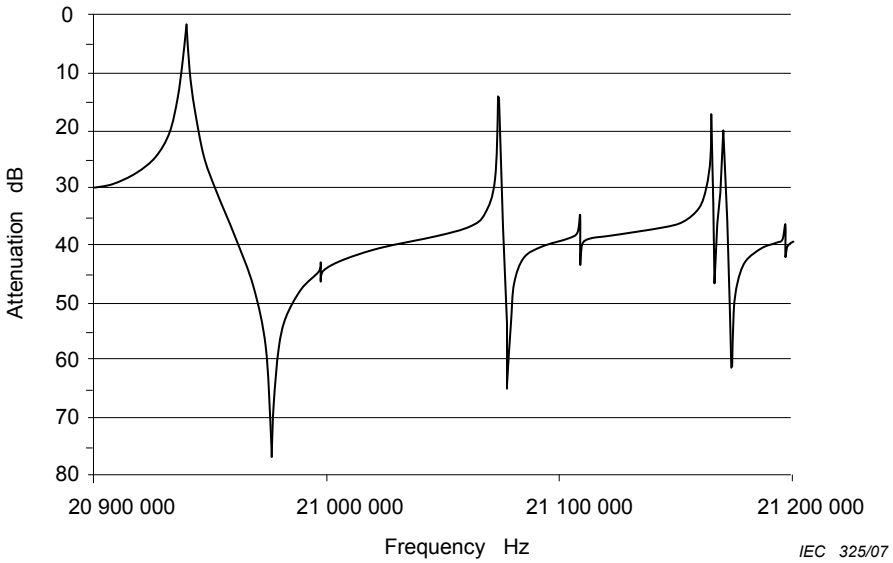

Figure 2 – Spectrum of spurious responses

NOTE The attenuation values measured on a network analyzer depend on the termination resistance of the test fixture used (e.g. 25 Ω for a π-network of IEC 60444-1). They are different from the spurious attenuation as computed from equation (3).

NOTE The frequencies and attenuation values measured on a network analyzer are different if the crystal resonator is connected to a load capacitor.

See also note under 3.2.1.2.

3 Measurement methods

The following measurement parameters are necessary and should be given in the detail specification:

- frequency range of the spurious resonances FR_{spur} to be evaluated;
- level of drive.

Care must be taken in selecting a suitable measurement (sweep) time.

3.1 Method A (Full parameter determination)

The measurement system consists of a π-network or an s-parameter test fixture in accordance with IEC 60444-1 and IEC 60444–5 in conjunction with a network analyzer or an equivalent setup.

The admittance of the crystal is measured within the specified frequency range FR_{spur}. The spurious resonances are isolated with the method of successive removal of resonances. From the admittance data, the equivalent circuit parameters of the various resonance modes are computed using one of the evaluation procedures described in IEC 60444-5.

3.1.1 Measurement procedure

The technique is described in more detail in [1][1]. The measurement sequence is as follows:

a) measurement of the static capacitance C_0 as in IEC 60444-5;

[1] Figures in square brackets refer to the bibliography.

Documents
Document Sharing Hub
Full document details: IEC 60444-9 2007

b) measurement of the main mode parameters (i = 1) as in IEC 60444-5, the resulting parameters are:

series resonance frequency $f_s = f_1 = \frac{\omega_1}{2\pi}$

equivalent electrical parameters R_1, C_1, and L_1, and

$$\text{quality factor } Q = Q_1 = \frac{\omega_1 L_1}{R_1} = \frac{1}{\omega_1 C_1 R_1} \tag{4}$$

c) measurement of the complex admittance $Y_{res}(f)$ in the specified frequency range FR_{spur}

Measurement parameters:

Assuming

$$Q_2, Q_3, \ldots Q_n \approx Q_1 \tag{5}$$

the minimum settling time t_{set} for each frequency is:

$$t_{set} = \frac{Q_1}{\omega_1} \tag{6}$$

For at least two data points within the resonance bandwidth, the minimum number of data points N is

$$N = 2 \cdot \frac{FR_{spur}}{Q_1} \tag{7}$$

The minimum sweep time t_{swp} is then

$$t_{swp} = t_{set} \cdot N \tag{8}$$

NOTE If necessary the frequency sweep range FR_{spur} must be divided into several sub-intervals.

Resulting parameters:

The array of complex admittance $Y_{res}(f)$, expressed, for example as arrays for magnitude $|Y_{res}(j)|$, phase $\Phi_{res}(j)$ and frequency $f(j)$ with j = 1,2, … N and $f(1) = f1$, the frequency of the main mode.

Search for spurious resonance peaks

The search for spurious resonances requires several steps to distinguish the resonance peaks from noise peaks and from broadband responses.

See flowchart in Figure 3 for reference.

– Identify local maxima of $\mathrm{Re}(Y_{res}(j))$ for neighbouring data points (j –1, j, j +1)

For the analysis the real part of the admittance is used.

$$\mathrm{Re}(Y_{res}(j)) = |Y_{res}(j)| \cdot \cos(\Phi_{res}(j)) \tag{9}$$

For j = 2 …N–1 the admittance values are analysed as follows:

If

$$\mathrm{Re}(Y_{res}(j)) > \mathrm{Re}(Y_{res}(j-1)) \text{ and } \mathrm{Re}(Y_{res}(j)) > \mathrm{Re}(Y_{res}(j+1))$$

then

$f_{peak} = f(j)$ is a candidate for a spurious resonance peak.

Documents
Document Sharing Hub
Full document details: IEC 60444-9 2007

– Distinguish between real peaks and fake peaks

Fake peaks due to noise, etc. can be identified by assuming a realistic Q-value for the spurious resonances with respect to Q_1 as determined in step b).

Upper limit Q_{max}:

$$Q_{max} = k_{max} \cdot Q_1 \quad \text{with } k_{max} = 2 \ldots 10 \quad (\text{recommended: } k_{max} = 5) \tag{10}$$

The minimum 3 dB half-bandwidth BW_{min} for a spurious resonance peak is therefore

$$BW_{min} = \frac{f_1}{2 \cdot Q_{max}} \tag{11}$$

For each candidate for a spurious resonance peak, the data points next to $|Y_{res}(f_{peak})|$ are inspected. If the amplitude at each side is less than according to Q_{max}:

$$\frac{\left|Y_{res}(f_{peak})\right|}{\left|Y_{res}(f_{peak} \pm BW_{min})\right|} \leq \sqrt{2} \tag{12}$$

then this peak is still accepted as a candidate. Otherwise, the peak is considered as a fake.

Lower limit Q_{min}:

$$Q_{min} = k_{min} \cdot Q_1 \quad \text{with } k_{min} = 0{,}1 \ldots 0{,}5 \quad (\text{recommended: } k_{min} = 0{,}2) \tag{13}$$

The maximum 3 dB half-bandwidth BW_{max} for a spurious resonance peak is therefore

$$BW_{max} = \frac{f_1}{2 \cdot Q_{min}} \tag{14}$$

For each candidate for a spurious resonance peak , the data points next to $|Y_{res}(f_{peak})|$ are inspected. If the amplitude at each side is greater than according to Q_{max}:

$$\frac{\left|Y_{res}(f_{peak})\right|}{\left|Y_{res}(f_{peak} \pm BW_{max})\right|} \geq \sqrt{2} \tag{15}$$

then the selected peak is accepted as a true spurious resonance peak. Otherwise, the peak is considered as a fake.

Resulting parameters: n–1 spurious resonance frequencies f_m^i (i = 2 … n)

NOTE If the spurious resonances are very close to strong modes, it is recommended that a 1 dB instead of a 3 dB bandwidth is used. In the above equations, the term $\sqrt{2}$ must then be replaced by the factor 1,122, and the values for BW_{max} and BW_{min} must be changed accordingly.

Documents
Document Sharing Hub
Full document details: IEC 60444-9 2007

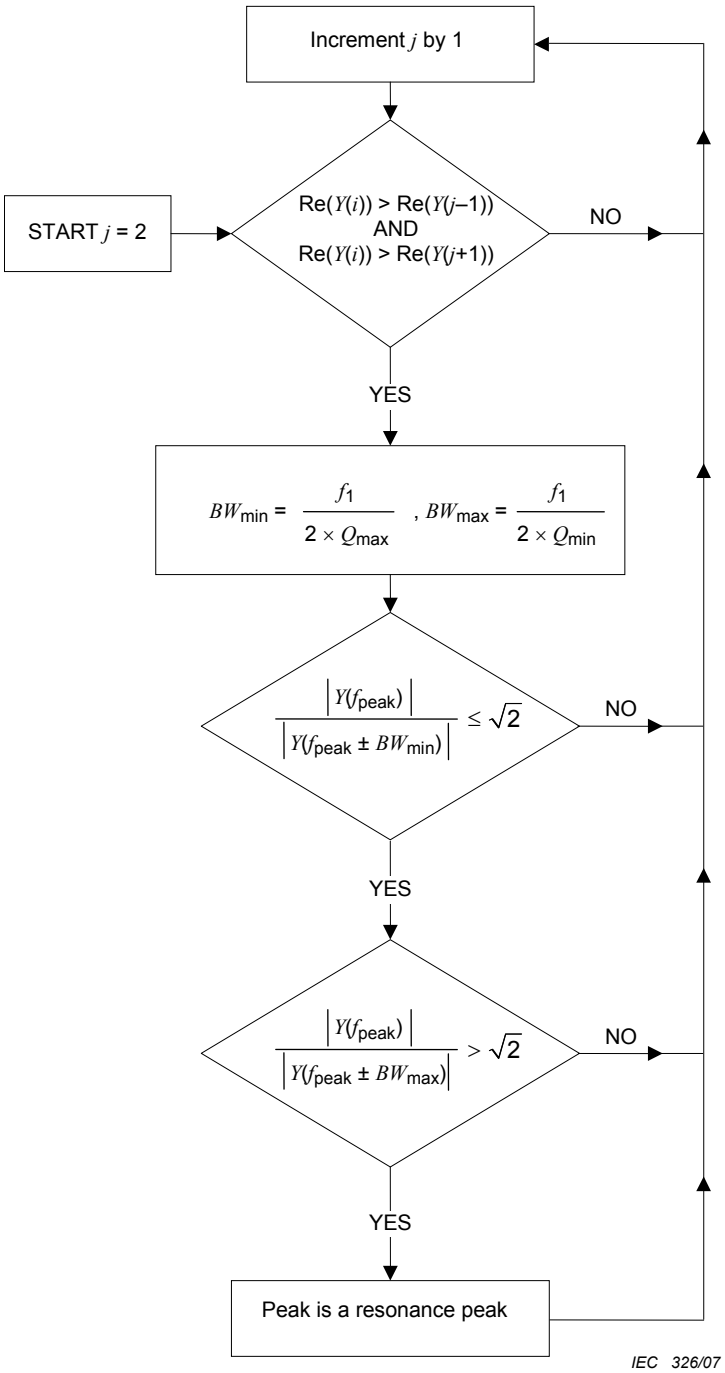

Figure 3 – Flowchart for spurious resonance search

d) zooming of the identified spurious resonances

For each of the true spurious peaks f_{spur}(i) identified in step c) a new set of admittance data is taken by zooming the frequency intervals $f_{spur}(i) \pm BW_{max}$ with at least N_i = 11 data points per sweep interval and a minimum sweep time t_{swp} of

$$t_{swp} \geq \frac{10 \cdot \sqrt{Q_{min} \cdot Q_{max}}}{k_{min} \cdot \omega_1} \tag{16}$$

Documents
Document Sharing Hub
Full document details: IEC 60444-9 2007