IEC 60445

Edition 7.0 2021-07

INTERNATIONAL STANDARD

NORME INTERNATIONALE

colour inside

BASIC SAFETY PUBLICATION

PUBLICATION FONDAMENTALE DE SÉCURITÉ

Basic and safety principles for man-machine interface, marking and identification – Identification of equipment terminals, conductor terminations and conductors

Principes fondamentaux et de sécurité pour les interfaces homme-machine, le marquage et l'identification – Identification des bornes de matériels, des extrémités de conducteurs et des conducteurs

IEC 60445:2021-07(en-fr)

Documents
Document Sharing Hub

Full document details: IEC 60445 2021

THIS PUBLICATION IS COPYRIGHT PROTECTED
Copyright © 2021 IEC, Geneva, Switzerland

All rights reserved. Unless otherwise specified, no part of this publication may be reproduced or utilized in any form or by any means, electronic or mechanical, including photocopying and microfilm, without permission in writing from either IEC or IEC's member National Committee in the country of the requester. If you have any questions about IEC copyright or have an enquiry about obtaining additional rights to this publication, please contact the address below or your local IEC member National Committee for further information.

Droits de reproduction réservés. Sauf indication contraire, aucune partie de cette publication ne peut être reproduite ni utilisée sous quelque forme que ce soit et par aucun procédé, électronique ou mécanique, y compris la photocopie et les microfilms, sans l'accord écrit de l'IEC ou du Comité national de l'IEC du pays du demandeur. Si vous avez des questions sur le copyright de l'IEC ou si vous désirez obtenir des droits supplémentaires sur cette publication, utilisez les coordonnées ci-après ou contactez le Comité national de l'IEC de votre pays de résidence.

IEC Central Office
3, rue de Varembé
CH-1211 Geneva 20
Switzerland

Tel.: +41 22 919 02 11
info@iec.ch
www.iec.ch

About the IEC
The International Electrotechnical Commission (IEC) is the leading global organization that prepares and publishes International Standards for all electrical, electronic and related technologies.

About IEC publications
The technical content of IEC publications is kept under constant review by the IEC. Please make sure that you have the latest edition, a corrigendum or an amendment might have been published.

IEC publications search - webstore.iec.ch/advsearchform
The advanced search enables to find IEC publications by a variety of criteria (reference number, text, technical committee, …). It also gives information on projects, replaced and withdrawn publications.

IEC Just Published - webstore.iec.ch/justpublished
Stay up to date on all new IEC publications. Just Published details all new publications released. Available online and once a month by email.

IEC Customer Service Centre - webstore.iec.ch/csc
If you wish to give us your feedback on this publication or need further assistance, please contact the Customer Service Centre: sales@iec.ch.

IEC online collection - oc.iec.ch
Discover our powerful search engine and read freely all the publications previews. With a subscription you will always have access to up to date content tailored to your needs.

Electropedia - www.electropedia.org
The world's leading online dictionary on electrotechnology, containing more than 22 000 terminological entries in English and French, with equivalent terms in 18 additional languages. Also known as the International Electrotechnical Vocabulary (IEV) online.

A propos de l'IEC
La Commission Electrotechnique Internationale (IEC) est la première organisation mondiale qui élabore et publie des Normes internationales pour tout ce qui a trait à l'électricité, à l'électronique et aux technologies apparentées.

A propos des publications IEC
Le contenu technique des publications IEC est constamment revu. Veuillez vous assurer que vous possédez l'édition la plus récente, un corrigendum ou amendement peut avoir été publié.

Recherche de publications IEC - webstore.iec.ch/advsearchform
La recherche avancée permet de trouver des publications IEC en utilisant différents critères (numéro de référence, texte, comité d'études, …). Elle donne aussi des informations sur les projets et les publications remplacées ou retirées.

IEC Just Published - webstore.iec.ch/justpublished
Restez informé sur les nouvelles publications IEC. Just Published détaille les nouvelles publications parues. Disponible en ligne et une fois par mois par email.

Service Clients - webstore.iec.ch/csc
Si vous désirez nous donner des commentaires sur cette publication ou si vous avez des questions contactez-nous: sales@iec.ch.

IEC online collection - oc.iec.ch
Découvrez notre puissant moteur de recherche et consultez gratuitement tous les aperçus des publications. Avec un abonnement, vous aurez toujours accès à un contenu à jour adapté à vos besoins.

Electropedia - www.electropedia.org
Le premier dictionnaire d'électrotechnologie en ligne au monde, avec plus de 22 000 articles terminologiques en anglais et en français, ainsi que les termes équivalents dans 16 langues additionnelles. Egalement appelé Vocabulaire Electrotechnique International (IEV) en ligne.

Documents
Document Sharing Hub

Full document details: IEC 60445 2021

IEC 60445

Edition 7.0 2021-07

INTERNATIONAL STANDARD

NORME INTERNATIONALE

colour inside

BASIC SAFETY PUBLICATION
PUBLICATION FONDAMENTALE DE SÉCURITÉ

Basic and safety principles for man-machine interface, marking and identification – Identification of equipment terminals, conductor terminations and conductors

Principes fondamentaux et de sécurité pour les interfaces homme-machine, le marquage et l'identification – Identification des bornes de matériels, des extrémités de conducteurs et des conducteurs

INTERNATIONAL
ELECTROTECHNICAL
COMMISSION

COMMISSION
ELECTROTECHNIQUE
INTERNATIONALE

ICS 01.080.20; 13.110; 29.020

ISBN 978-2-8322-9921-0

Warning! Make sure that you obtained this publication from an authorized distributor.
Attention! Veuillez vous assurer que vous avez obtenu cette publication via un distributeur agréé.

AVA Documents
Document Sharing Hub

® Registered trademark of the International Electrotechnical Commission
Marque déposée de la Commission Electrotechnique Internationale

Full document details: IEC 60445 2021

CONTENTS

FOREWORD....4
1 Scope....6
2 Normative references....6
3 Terms and definitions....6
4 Methods of identification....10
5 Application of identification means....10
6 Identification by colours....11
6.1 General....11
6.2 Use of single colours....11
6.2.1 The use of the single colours GREEN and YELLOW....11
6.2.2 Neutral or mid-point conductor....12
6.2.3 Line conductor in AC system....12
6.2.4 Line conductor in DC system....12
6.2.5 Functional earthing conductor....12
6.3 Use of bi-colour combinations....12
6.3.1 Permitted colours....12
6.3.2 Protective conductor....12
6.3.3 PEN conductor....13
6.3.4 PEL conductor....13
6.3.5 PEM conductor....14
6.3.6 Protective bonding conductor....14
7 Identification by alphanumeric notation....14
7.1 General....14
7.2 Equipment terminal identification – Marking principles....14
7.3 Identification of certain designated conductors....17
7.3.1 General....17
7.3.2 Neutral conductor....17
7.3.3 Protective conductor....17
7.3.4 PEN conductor....17
7.3.5 PEL conductor....17
7.3.6 PEM conductor....17
7.3.7 Protective bonding conductor....17
7.3.8 Functional earthing conductor....18
7.3.9 Functional bonding conductor....18
7.3.10 Mid-point conductor....18
7.3.11 Line conductor....18
7.3.12 System-referencing-conductor....18
Annex A (informative) Colours, alphanumeric notations and graphical symbols used for identification of conductors and terminals....19
Annex B (informative) List of notes concerning particular conditions in certain countries....21
Bibliography....26

Figure 1 – Single element with two terminals....15

Documents
Document Sharing Hub

Full document details: IEC 60445 2021

Figure 2 – Single element with four terminals: Two endpoints and two intermediate points 15
Figure 3 – Three-phase equipment with six terminals 15
Figure 4 – Three-element equipment with twelve terminals: Six endpoints and six intermediate points 16
Figure 5 – Equipment with groups of elements 16
Figure 6 – Interconnection of equipment terminals and certain designated conductors 17

Table A.1 – Colours, alphanumeric notations and graphical symbols used for identification of conductors and terminals 19

Documents
Document Sharing Hub

Full document details: IEC 60445 2021

INTERNATIONAL ELECTROTECHNICAL COMMISSION

BASIC AND SAFETY PRINCIPLES FOR MAN-MACHINE INTERFACE, MARKING AND IDENTIFICATION – IDENTIFICATION OF EQUIPMENT TERMINALS, CONDUCTOR TERMINATIONS AND CONDUCTORS

FOREWORD

1) The International Electrotechnical Commission (IEC) is a worldwide organization for standardization comprising all national electrotechnical committees (IEC National Committees). The object of IEC is to promote international co-operation on all questions concerning standardization in the electrical and electronic fields. To this end and in addition to other activities, IEC publishes International Standards, Technical Specifications, Technical Reports, Publicly Available Specifications (PAS) and Guides (hereafter referred to as "IEC Publication(s)"). Their preparation is entrusted to technical committees; any IEC National Committee interested in the subject dealt with may participate in this preparatory work. International, governmental and non-governmental organizations liaising with the IEC also participate in this preparation. IEC collaborates closely with the International Organization for Standardization (ISO) in accordance with conditions determined by agreement between the two organizations.
2) The formal decisions or agreements of IEC on technical matters express, as nearly as possible, an international consensus of opinion on the relevant subjects since each technical committee has representation from all interested IEC National Committees.
3) IEC Publications have the form of recommendations for international use and are accepted by IEC National Committees in that sense. While all reasonable efforts are made to ensure that the technical content of IEC Publications is accurate, IEC cannot be held responsible for the way in which they are used or for any misinterpretation by any end user.
4) In order to promote international uniformity, IEC National Committees undertake to apply IEC Publications transparently to the maximum extent possible in their national and regional publications. Any divergence between any IEC Publication and the corresponding national or regional publication shall be clearly indicated in the latter.
5) IEC itself does not provide any attestation of conformity. Independent certification bodies provide conformity assessment services and, in some areas, access to IEC marks of conformity. IEC is not responsible for any services carried out by independent certification bodies.
6) All users should ensure that they have the latest edition of this publication.
7) No liability shall attach to IEC or its directors, employees, servants or agents including individual experts and members of its technical committees and IEC National Committees for any personal injury, property damage or other damage of any nature whatsoever, whether direct or indirect, or for costs (including legal fees) and expenses arising out of the publication, use of, or reliance upon, this IEC Publication or any other IEC Publications.
8) Attention is drawn to the Normative references cited in this publication. Use of the referenced publications is indispensable for the correct application of this publication.
9) Attention is drawn to the possibility that some of the elements of this IEC Publication may be the subject of patent rights. IEC shall not be held responsible for identifying any or all such patent rights.

IEC 60445 has been prepared by IEC technical committee 3: Documentation, graphical symbols and representations of technical information. It is an International Standard.

It has the status of a basic safety publication in accordance with IEC Guide 104.

This seventh edition cancels and replaces the sixth edition published in 2017. This edition constitutes a technical revision.

This edition includes the following significant technical changes with respect to the previous edition:

a) the definitions have been aligned with IEC 60050-195:2021 and IEC 60050-826:—[1];

[1] Third edition under preparation. Stage at time of publication: IEC FDIS 60050-826:2021.

Documents
Document Sharing Hub

Full document details: IEC 60445 2021

b) the provisions for colour to be used for identification of certain designated conductors are made requirements and not only recommendations;

c) introduction of a new subclause on marking of protective terminals for multiple power supply inputs on equipment.

The text of this International Standard is based on the following documents:

FDIS	Report on voting
3/1491/FDIS	3/1517/RVD

Full information on the voting for its approval can be found in the report on voting indicated in the above table.

The language used for the development of this International Standard is English.

This document was drafted in accordance with ISO/IEC Directives, Part 2, and developed in accordance with ISO/IEC Directives, Part 1 and ISO/IEC Directives, IEC Supplement, available at www.iec.ch/members_experts/refdocs. The main document types developed by IEC are described in greater detail at www.iec.ch/standardsdev/publications.

The reader's attention is drawn to the fact that Annex B lists all of the "in-some-country" clauses on differing practices of a less permanent nature relating to the subject of this standard.

The committee has decided that the contents of this document will remain unchanged until the stability date indicated on the IEC website under "http://webstore.iec.ch" in the data related to the specific document. At this date, the document will be

- reconfirmed,
- withdrawn,
- replaced by a revised edition, or
- amended.

IMPORTANT – The 'colour inside' logo on the cover page of this publication indicates that it contains colours which are considered to be useful for the correct understanding of its contents. Users should therefore print this document using a colour printer.

Documents
Document Sharing Hub

Full document details: IEC 60445 2021

BASIC AND SAFETY PRINCIPLES FOR MAN-MACHINE INTERFACE, MARKING AND IDENTIFICATION – IDENTIFICATION OF EQUIPMENT TERMINALS, CONDUCTOR TERMINATIONS AND CONDUCTORS

1 Scope

This document applies to the identification and marking of terminals of electrical equipment such as resistors, fuses, relays, contactors, transformers, rotating machines and, wherever applicable, to combinations of such equipment (e.g. assemblies), and it also applies to the identification of terminations of certain designated conductors. It also provides general rules for the use of certain colours or alphanumeric notations to identify conductors with the aim of avoiding ambiguity and ensuring safe operation. These conductor colours and alphanumeric notations are intended to be applied on cores, busbars, and electrical equipment, and in cables or installations.

This basic safety publication focusing on safety essential requirements is primarily intended for use by technical committees in the preparation of standards in accordance with the principles laid down in IEC Guide 104 and ISO/IEC Guide 51.

It is not intended for use by manufacturers or certification bodies. One of the responsibilities of a technical committee is, wherever applicable, to make use of basic safety publications in the preparation of its publications. The requirements of this basic safety publication will not apply unless specifically referred to or included in the relevant publications.

2 Normative references

The following documents are referred to in the text in such a way that some or all of their content constitutes requirements of this document. For dated references, only the edition cited applies. For undated references, the latest edition of the referenced document (including any amendments) applies.

IEC 60417, *Graphical symbols for use on equipment* (available at http://www.graphical-symbols.info/equipment)

IEC 60617, *Graphical symbols for diagrams* (available at http://std.iec.ch/iec60617)

3 Terms and definitions

For the purposes of this document, the following terms and definitions apply.

ISO and IEC maintain terminological databases for use in standardization at the following addresses:

- IEC Electropedia: available at http://www.electropedia.org/
- ISO Online browsing platform: available at http://www.iso.org/obp

NOTE The terms are sorted in alphabetical order in the English language.

Documents
Document Sharing Hub

Full document details: IEC 60445 2021

3.1
earthing
grounding, US
electric connections between conductive parts and local earth

[SOURCE: IEC 60050-195:2021, 195-01-24]

3.2
earthed protective bonding conductor
protective bonding conductor which has a conductive path to local earth

3.3
electrical equipment
item used for generation, conversion, transmission, distribution or utilization of electric energy

Note 1 to entry: Examples of such items are electric machines, transformers, switchgear and controlgear, measuring instruments, protective devices, wiring systems, current-using equipment.

[SOURCE: IEC 60050-826:—, 826-16-01]

3.4
electrical safety
freedom from risk that is not tolerable and which is caused by electricity

[SOURCE: IEC 60050-195:2021, 195-01-20]

3.5
equipotential bonding
set of electric connections intended to achieve equipotentiality between conductive parts

[SOURCE: IEC 60050-195:2021, 195-01-10]

3.6
equipotentiality
state when conductive parts are at a substantially equal electric potential

[SOURCE: IEC 60050-195:2021, 195-01-09]

3.7
functional bonding conductor
conductor provided for functional-equipotential-bonding

[SOURCE: IEC 60050-195:2021, 195-02-16]

3.8
functional earthing
functional grounding, US
earthing for purposes other than electrical safety

[SOURCE: IEC 60050-195:2021, 195-01-13]

3.9
functional earthing conductor
functional grounding conductor, US
conductor provided for functional earthing

[SOURCE: IEC 60050-195:2021, 195-02-15]

Documents
Document Sharing Hub

Full document details: IEC 60445 2021

3.10
functional-equipotential-bonding
equipotential bonding for reasons other than electrical safety

[SOURCE: IEC 60050-195:2021, 195-01-16]

3.11
line conductor
conductor intended to be energized and capable of contributing to the transmission or distribution of electric energy but which is not a neutral conductor or mid-point conductor

[SOURCE: IEC 60050-195:2021, 195-02-08, modified – Note 1 to entry removed.]

3.12
local earth
local ground, US
part of the Earth that is in electric contact with an earth electrode and that has an electric potential not necessarily equal to zero

[SOURCE: IEC 60050-195:2021, 195-01-03]

3.13
mid-point
common point between two symmetrical circuit elements of which the opposite ends are electrically connected to different line conductors of the same circuit

[SOURCE: IEC 60050-195:2021, 195-02-04]

3.14
mid-point conductor
conductor electrically connected to the mid-point and capable of contributing to the distribution of electric energy

[SOURCE: IEC 60050-195:2021, 195-02-07]

3.15
neutral conductor
conductor electrically connected to the neutral point and capable of contributing to the distribution of electric energy

[SOURCE: IEC 60050-195:2021, 195-02-06]

3.16
neutral point
common point of a star-connected polyphase system

[SOURCE: IEC 60050-195:2021, 195-02-05]

3.17
PEL conductor
conductor combining the functions of both a protective earthing conductor and a line conductor

[SOURCE: IEC 60050-195:2021, 195-02-14]

Documents
Document Sharing Hub
Full document details: IEC 60445 2021

3.18
PEM conductor
conductor combining the functions of both a protective earthing conductor and a mid-point conductor

[SOURCE: IEC 60050-195:2021, 195-02-13]

3.19
PEN conductor
conductor combining the functions of both a protective earthing conductor and a neutral conductor

[SOURCE: IEC 60050-195:2021, 195-02-12]

3.20
protective bonding conductor
protective conductor provided for protective-equipotential-bonding

[SOURCE: IEC 60050-195:2021, 195-02-10]

3.21
protective conductor
equipment grounding conductor, US
grounding electrode conductor, US
conductor provided for purposes of electrical safety

Note 1 to entry: The terms "equipment grounding conductor" and "grounding electrode conductor" are used in the US depending on their application.

[SOURCE: IEC 60050-195:2021, 195-02-09, modified – Two synonyms and Note 1 to entry have been added.]

3.22
protective earthing
protective grounding, US
earthing for purposes of electrical safety

[SOURCE: IEC 60050-195:2021, 195-01-11]

3.23
protective earthing conductor
PE conductor
protective grounding conductor, US
protective conductor provided for protective earthing

[SOURCE: IEC 60050-195:2021, 195-02-11]

3.24
protective-equipotential-bonding
equipotential bonding for the purposes of electrical safety

[SOURCE: IEC 60050-195:2021, 195-01-15]

Documents
Document Sharing Hub

Full document details: IEC 60445 2021

3.25
protective terminal
terminal provided on equipment and intended for the electric connection with a protective conductor

[SOURCE: IEC 60050-195:2021, 195-02-43]

3.26
system-referencing-conductor
conductor between a live conductor and the earthing arrangement to enable the live conductor to be substantially at the same potential as the Earth

[SOURCE: IEC 60050-826: —, 826-13-38]

3.27
terminal
conductive part of electrical equipment provided for connecting that electrical equipment to one or more external conductors

[SOURCE: IEC 60050-151:2001, 151-12-12, modified – "device, electric circuit or electric network" is replaced by "electrical equipment", and Note 1 to entry is removed.]

3.28
unearthed protective bonding conductor
protective bonding conductor which is isolated from the Earth

4 Methods of identification

Where the identification of equipment terminals and of terminations of certain designated conductors is considered necessary, it shall be effected by the use of one or more of the following methods:

– the physical or relative location of the equipment terminals or of terminations of certain designated conductors;
– a colour code for equipment terminals and terminations of certain designated conductors in accordance with Clause 6;
– graphical symbols in accordance with IEC 60417. If additional symbols are required, these shall be consistent with IEC 60617;
– an alphanumeric notation in accordance with the system laid down in Clause 7.

To keep consistency with the documentation, conductor and equipment terminal designation, the alphanumeric notation is recommended.

NOTE 1 It is recognised that for complex systems and installations additional marking and labelling are used for reasons other than safety, see for example IEC 62491.

NOTE 2 Annex A contains Table A.1 which provides an overview of identifications of certain designated conductors and equipment terminals to which these conductors are likely to be connected.

5 Application of identification means

The identifying colour, graphical symbol or alphanumeric notation shall be located on, or adjacent to, the corresponding terminal.

When more than one identification method is used and confusion is possible, the correlation between the methods shall be clarified in the associated documentation.

Documents
Document Sharing Hub
Full document details: IEC 60445 2021

When no confusion is possible, the juxtaposition of numerical and alphanumeric notation may be applied.

Terminals and conductors used for earthing or equipotential bonding are divided according to their purpose of earthing/bonding into the two basic concepts of protective purposes and functional purposes:

– If a terminal or conductor fulfils the requirements for both protective purposes and functional purposes, it shall be designated as a protective terminal or protective conductor, respectively.
– If the requirements for protective purposes are not met by a terminal or conductor intended for functional purposes, the terminal or conductor shall not be marked with an identification of a protective terminal or protective conductor, respectively.
– The requirements for functional earthing or functional-equipotential-bonding shall be defined by the manufacturer or the relevant product committee and should be specified within the documentation of the equipment.

NOTE 1 For example, requirements for handling electromagnetic compatibility (EMC) issues.

NOTE 2 Annex A contains Table A.1 which provides an overview of identifications of certain designated conductors and equipment terminals to which these conductors are likely to be connected.

6 Identification by colours

6.1 General

For identification of conductors, only the following colours shall be used:

BLACK, BROWN, RED, ORANGE, GREEN, YELLOW, BLUE, VIOLET, GREY, WHITE, PINK, TURQUOISE.

NOTE This list of colours is derived from IEC 60757.

The identification by colour shall be used at terminations and preferably throughout the length of the conductor either by the colour of the insulation or by colour markers, except for bare conductors where the colour identification shall be at termination and connection points.

Identification by colour or marking is not required for:

– concentric conductors of cables,
– metal sheath or armour of cables when used as a protective conductor,
– bare conductors where permanent identification is not practicable,
– extraneous-conductive-parts used as a protective conductor,
– exposed-conductive-parts used as a protective conductor.

Additional markings, for example alphanumerical, are allowed, provided that the colour identification remains unambiguous.

Where conductors shall be identified by colours, the requirements of 6.2 and 6.3 apply.

6.2 Use of single colours

6.2.1 The use of the single colours GREEN and YELLOW

The single colours GREEN and YELLOW shall only be used where confusion with the colouring of the conductors in accordance with 6.3.2 to 6.3.6 is not likely to occur.

Documents
Document Sharing Hub
Full document details: IEC 60445 2021

6.2.2 Neutral or mid-point conductor

A neutral or mid-point conductor shall be identified by the colour BLUE. In order to avoid confusion with other colours it is recommended to use an unsaturated colour BLUE, often called "light blue".

Where a neutral or mid-point conductor is present, the colour BLUE shall not be used for identifying any other conductor. In the absence of a neutral or mid-point conductor within the whole wiring system, the colour BLUE may be used for identifying a conductor with any other purpose, except as a protective conductor.

Bare conductors used as neutral or mid-point conductors shall be either coloured by a BLUE stripe, 15 mm to 100 mm wide in each unit or enclosure and at each accessible position, or coloured BLUE throughout their length.

NOTE In IEC 60079-11, the colour BLUE is used for the marking by colour of terminals, terminal boxes, plugs and sockets of intrinsically-safe circuits.

6.2.3 Line conductor in AC system

Line conductors in AC systems shall be identified by the colours BLACK, BROWN or GREY.

NOTE The sequence of colour codes in 6.2.3 is in alphabetical order in the English language, and does not indicate any preferred phasing or direction of rotation.

6.2.4 Line conductor in DC system

Line conductors in DC systems shall be identified by the colour:

– RED for the positive line conductor,
– WHITE for the negative line conductor.

6.2.5 Functional earthing conductor

A functional earthing conductor shall be identified by the colour PINK. It is only necessary to apply the identification at the terminations and at points of connection.

6.3 Use of bi-colour combinations

6.3.1 Permitted colours

Any two of the colours listed in 6.1 may be combined, provided there is no risk of confusion.

To avoid any such confusion, the colour GREEN and the colour YELLOW shall not be used in colour combinations other than the combination GREEN-AND-YELLOW.

The colour combination GREEN-AND-YELLOW shall only be used for the purposes specified in 6.3.2 to 6.3.6.

6.3.2 Protective conductor

The protective conductor shall be identified by the bi-colour combination GREEN-AND-YELLOW.

GREEN-AND-YELLOW is the only colour combination recognized for identifying the protective conductor.

For a PEN, PEM, and PEL conductor, additional requirements are given in 6.3.3 to 6.3.5.

Documents
Document Sharing Hub
Full document details: IEC 60445 2021

The colour combination GREEN-AND-YELLOW shall be such that, on any 15 mm length of the conductor where colour coding is applied, one of these colours covers at least 30 % and not more than 70 % of the surface of the conductor, the other colour covering the remainder of that surface.

If bare conductors used as protective conductors are provided with colouring they shall be coloured GREEN-AND-YELLOW, either throughout the whole length of each conductor or in each compartment or unit or at each accessible position. If adhesive tape is used, only bi-coloured GREEN-AND-YELLOW tape shall be applied.

Where the protective conductor can be easily identified by its shape, construction or position, for example a concentric conductor, colour coding throughout its length is not necessary but the ends or accessible positions should be clearly identified by the graphical symbol IEC 60417-5019 (2006-08) "Protective earth; protective ground", ⏚, or the bi-colour combination GREEN-AND-YELLOW or the alphanumeric notation PE.

If extraneous conductive parts are used as a protective conductor, identification by colours is not necessary.

6.3.3 PEN conductor

A PEN conductor, when insulated, shall be identified by one of the following methods:

– GREEN-AND-YELLOW coloured insulation throughout its length and with BLUE colour markings at the terminations and points of connection; or
– BLUE coloured insulation throughout its length and with GREEN-AND-YELLOW coloured markings at the terminations and points of connection.

The method to be applied within a country should be decided by the National Committee and not on an individual basis.

The BLUE coloured markings at the termination and points of connection may be omitted provided one of the following two conditions is met:

– in electrical equipment, if relevant requirements are included in specific product standards or within a country;
– in the case of wiring systems, for example those used in industry, if decided by the relevant committee.

6.3.4 PEL conductor

A PEL conductor, when insulated, shall be identified by GREEN-AND-YELLOW coloured insulation throughout its length and with BLUE coloured markings at its terminations and points of connection of the PEL conductor.

The BLUE coloured markings at the termination and points of connection may be omitted provided one of the following two conditions is met:

– in electrical equipment, if relevant requirements are included in specific product standards or within a country;
– in the case of wiring systems, for example those used in industry, if decided by the relevant committee.

If confusion with a PEN or PEM conductor is likely, the alphanumeric designation as given in 7.3.5 shall be indicated at the terminations and points of connection.

Documents
Document Sharing Hub
Full document details: IEC 60445 2021

6.3.5 PEM conductor

A PEM conductor, when insulated, shall be identified by GREEN-AND-YELLOW coloured insulation throughout its length and with BLUE coloured markings at its terminations and points of connection of the PEM conductor.

The BLUE coloured markings at the termination and points of connection may be omitted provided one of the following two conditions is met:

– in electrical equipment, if relevant requirements are included in specific product standards or within a country;
– in the case of wiring systems, for example those used in industry, if decided by the relevant committee.

If confusion with a PEN or PEL conductor is likely, the alphanumeric designation given in 7.3.6 shall be indicated at the terminations and points of connection.

6.3.6 Protective bonding conductor

A protective bonding conductor shall be identified by the bi-colour combination GREEN-AND-YELLOW as specified in 6.3.2.

7 Identification by alphanumeric notation

7.1 General

If letters and/or numerals are used for identification, letters shall be uppercase Latin characters only and numerals shall be Arabic numerals.

It is recommended that the reference letters for DC elements be chosen from the first part of the alphabet and reference letters for AC elements from the second part.

Letters "I" and "O" shall not be used for identification to prevent confusion with the numerals "1" and "0"; the alphanumeric signs "+" and "−" may be used.

In order to avoid any confusion, unattached numerals 6 and 9 shall be underlined.

All alphanumeric notations shall be in strong contrast to the colour of the background (e.g. insulation).

The alphanumeric identification shall be clearly legible and durable.

NOTE For evaluation of the durability, see IEC 60227-2.

The alphanumeric system applies to identification of conductors and of conductors in a group of conductors. Conductors with GREEN-AND-YELLOW coloured insulation shall only be identified as a certain designated conductor in accordance with 7.3.3 to 7.3.9.

The alphanumeric identifications specified in 7.3 shall not be used for any purpose other than that specified.

Where no confusion is possible, parts of the complete alphanumeric notation laid down in the marking principles set out in 7.2 may be omitted.

7.2 Equipment terminal identification – Marking principles

7.2.1 Marking of equipment terminals should be based on the principles provided in 7.2.2 to 7.2.5.

AVA Documents
Document Sharing Hub

Full document details: IEC 60445 2021

7.2.2 The two endpoints of an element should be distinguished by consecutive reference numbers, the odd number being lower than the even number, for example 1 and 2 (see Figure 1).

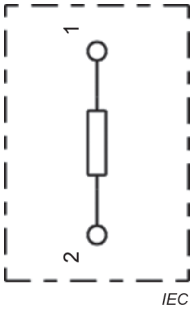

Figure 1 – Single element with two terminals

7.2.3 The intermediate points of a single element should be distinguished by reference numbers, preferably in a numerical order, for example 3, 4, 5, etc. The reference numbers chosen for intermediate points shall be higher than those chosen for the endpoints; their numbering commences at the point which lies closest to the endpoint with the lower reference number. Thus, for example, the intermediate points of an element with the endpoints 1 and 2 will be denoted by the reference numbers 3 and 4 (see Figure 2).

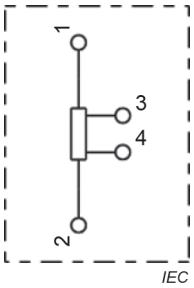

Figure 2 – Single element with four terminals: Two endpoints and two intermediate points

7.2.4 If several similar elements are combined in a group of elements, then one of the following methods for marking the elements shall be used:

– the two endpoints and intermediate points, if any, are distinguished by letters preceding the reference numbers referred to in 7.2.2 and 7.2.3, for example U, V, W corresponding to the phases of a three-phase AC system (see Figure 3);

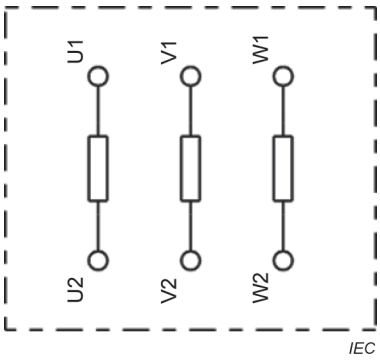

Figure 3 – Three-phase equipment with six terminals

Documents
Document Sharing Hub
Full document details: IEC 60445 2021

– the two endpoints and intermediate points, if any, should be distinguished by numbers preceding the reference numbers referred to in 7.2.2 and 7.2.3 where a phase identification is not necessary or possible. To avoid confusion, these numbers shall be separated by a full stop. For example, the endpoints of one element may be marked 1.1 and 1.2, those of another element, 2.1 and 2.2 (see Figure 4);

NOTE For examples of an unambiguous terminal designation with respect to the object to which the terminal belongs, see IEC 61666:2010, Annex A.

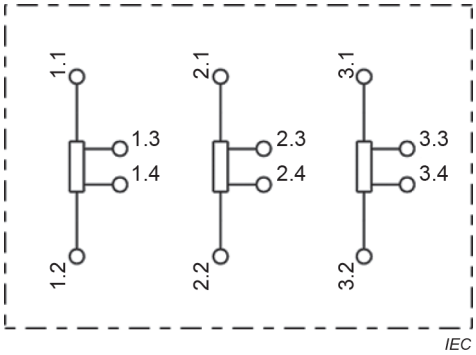

Figure 4 – Three-element equipment with twelve terminals: Six endpoints and six intermediate points

– in the case of terminal blocks, the numerical identification should be in numerical order.

Further detailed requirements on terminal markings and identification may be given by relevant product committees.

7.2.5 Similar groups of elements having the same reference letters should be distinguished by a numerical prefix to the reference letters (see Figure 5 a) and Figure 5 b)).

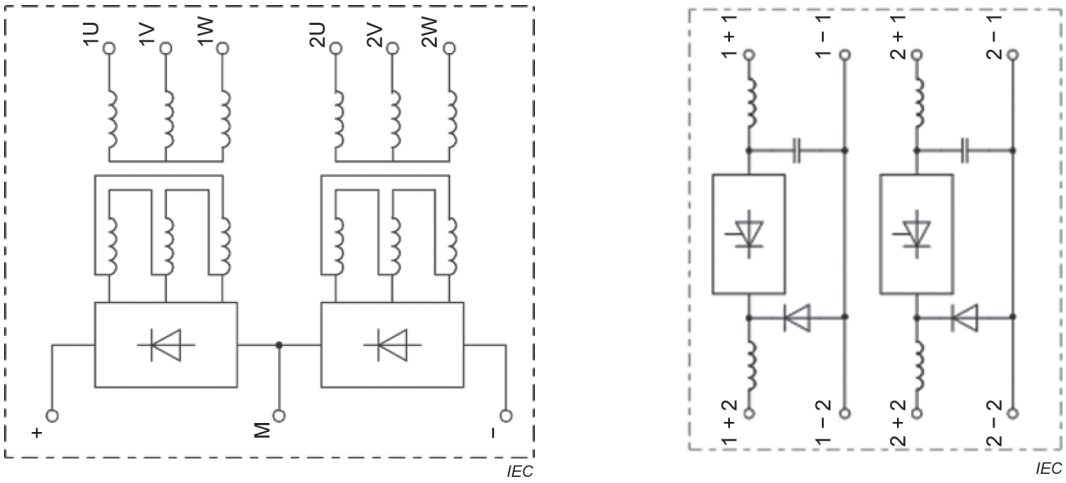

a) Three-phase equipment with two groups of elements

b) Two-phase equipment with two groups of elements with four terminals each not intended to be connected to certain designated conductors

Figure 5 – Equipment with groups of elements

Figure 6 illustrates the interconnection of equipment terminals and certain designated conductors, marked in accordance with the alphanumeric notation.

Documents
Document Sharing Hub
Full document details: IEC 60445 2021