IEC 60512-99-003

Edition 1.0 2023-09

INTERNATIONAL STANDARD

NORME INTERNATIONALE

colour inside

Connectors for electrical and electronic equipment – Tests and measurements – Part 99-003: Endurance test schedules – Test 99c: Test schedule for balanced single-pair connectors separating (unmating) under electrical load

Connecteurs pour équipements électriques et électroniques – Essais et mesures – Partie 99-003: Programmes d'essais d'endurance – Essai 99c: Programme d'essai des connecteurs à une seule paire symétrique lors de la séparation (désaccouplement) sous charge électrique

IEC 60512-99-003:2023-09(en-fr)

Documents
Document Sharing Hub

Full document details: IEC 60512-99-003-2023

THIS PUBLICATION IS COPYRIGHT PROTECTED
Copyright © 2023 IEC, Geneva, Switzerland

All rights reserved. Unless otherwise specified, no part of this publication may be reproduced or utilized in any form or by any means, electronic or mechanical, including photocopying and microfilm, without permission in writing from either IEC or IEC's member National Committee in the country of the requester. If you have any questions about IEC copyright or have an enquiry about obtaining additional rights to this publication, please contact the address below or your local IEC member National Committee for further information.

Droits de reproduction réservés. Sauf indication contraire, aucune partie de cette publication ne peut être reproduite ni utilisée sous quelque forme que ce soit et par aucun procédé, électronique ou mécanique, y compris la photocopie et les microfilms, sans l'accord écrit de l'IEC ou du Comité national de l'IEC du pays du demandeur. Si vous avez des questions sur le copyright de l'IEC ou si vous désirez obtenir des droits supplémentaires sur cette publication, utilisez les coordonnées ci-après ou contactez le Comité national de l'IEC de votre pays de résidence.

IEC Secretariat
3, rue de Varembé
CH-1211 Geneva 20
Switzerland

Tel.: +41 22 919 02 11
info@iec.ch
www.iec.ch

About the IEC
The International Electrotechnical Commission (IEC) is the leading global organization that prepares and publishes International Standards for all electrical, electronic and related technologies.

About IEC publications
The technical content of IEC publications is kept under constant review by the IEC. Please make sure that you have the latest edition, a corrigendum or an amendment might have been published.

IEC publications search - webstore.iec.ch/advsearchform
The advanced search enables to find IEC publications by a variety of criteria (reference number, text, technical committee, …). It also gives information on projects, replaced and withdrawn publications.

IEC Just Published - webstore.iec.ch/justpublished
Stay up to date on all new IEC publications. Just Published details all new publications released. Available online and once a month by email.

IEC Customer Service Centre - webstore.iec.ch/csc
If you wish to give us your feedback on this publication or need further assistance, please contact the Customer Service Centre: sales@iec.ch.

IEC Products & Services Portal - products.iec.ch
Discover our powerful search engine and read freely all the publications previews. With a subscription you will always have access to up to date content tailored to your needs.

Electropedia - www.electropedia.org
The world's leading online dictionary on electrotechnology, containing more than 22 300 terminological entries in English and French, with equivalent terms in 19 additional languages. Also known as the International Electrotechnical Vocabulary (IEV) online.

A propos de l'IEC
La Commission Electrotechnique Internationale (IEC) est la première organisation mondiale qui élabore et publie des Normes internationales pour tout ce qui a trait à l'électricité, à l'électronique et aux technologies apparentées.

A propos des publications IEC
Le contenu technique des publications IEC est constamment revu. Veuillez vous assurer que vous possédez l'édition la plus récente, un corrigendum ou amendement peut avoir été publié.

Recherche de publications IEC - webstore.iec.ch/advsearchform
La recherche avancée permet de trouver des publications IEC en utilisant différents critères (numéro de référence, texte, comité d'études, …). Elle donne aussi des informations sur les projets et les publications remplacées ou retirées.

IEC Just Published - webstore.iec.ch/justpublished
Restez informé sur les nouvelles publications IEC. Just Published détaille les nouvelles publications parues. Disponible en ligne et une fois par mois par email.

Service Clients - webstore.iec.ch/csc
Si vous désirez nous donner des commentaires sur cette publication ou si vous avez des questions contactez-nous: sales@iec.ch.

IEC Products & Services Portal - products.iec.ch
Découvrez notre puissant moteur de recherche et consultez gratuitement tous les aperçus des publications. Avec un abonnement, vous aurez toujours accès à un contenu à jour adapté à vos besoins.

Electropedia - www.electropedia.org
Le premier dictionnaire d'électrotechnologie en ligne au monde, avec plus de 22 300 articles terminologiques en anglais et en français, ainsi que les termes équivalents dans 19 langues additionnelles. Egalement appelé Vocabulaire Electrotechnique International (IEV) en ligne.

AVA Documents
Document Sharing Hub

Full document details: IEC 60512-99-003-2023

IEC 60512-99-003

Edition 1.0 2023-09

INTERNATIONAL STANDARD

NORME INTERNATIONALE

colour inside

Connectors for electrical and electronic equipment – Tests and measurements – Part 99-003: Endurance test schedules – Test 99c: Test schedule for balanced single-pair connectors separating (unmating) under electrical load

Connecteurs pour équipements électriques et électroniques – Essais et mesures – Partie 99-003: Programmes d'essais d'endurance – Essai 99c: Programme d'essai des connecteurs à une seule paire symétrique lors de la séparation (désaccouplement) sous charge électrique

INTERNATIONAL
ELECTROTECHNICAL
COMMISSION

COMMISSION
ELECTROTECHNIQUE
INTERNATIONALE

ICS 13.220.40

ISBN 978-2-8322-7561-0

Warning! Make sure that you obtained this publication from an authorized distributor.
Attention! Veuillez vous assurer que vous avez obtenu cette publication via un distributeur agréé.

AVA Documents
Document Sharing Hub

® Registered trademark of the International Electrotechnical Commission
Marque déposée de la Commission Electrotechnique Internationale

Full document details: IEC 60512-99-003-2023

CONTENTS

FOREWORD 3
1 Scope 5
2 Normative references 5
3 Terms, definitions and acronyms 6
3.1 Terms and definitions 6
3.2 Acronyms 6
4 General 6
5 Preparation of specimens 6
6 Test circuit requirements 6
6.1 General 6
6.2 Voltage and current 7
6.3 Auxiliary equipment 8
7 Test methods 8
7.1 Mechanical operations with electrical load 8
7.2 Flowing mixed gas corrosion 8
8 Test and test schedule – Test group UEL 1 8
Annex A (informative) Test voltage and current setting instructions 11
A.1 General 11
A.2 Rationale 11
A.3 Suggested setting instructions 11
Annex B (informative) Discussion of the test circuit elements 12
B.1 General 12
B.2 The test circuit elements 12
B.2.1 Power supply 12
B.2.2 Inductors 12
B.2.3 PD load 12
B.3 An example of calculating voltage and load 12
Annex C (informative) Development of the test circuit 13
C.1 Model of the PSE and the PD 13
C.2 Removal of the semiconductors 13
C.3 Combination of the elements 14
C.4 Further adjustments 14
C.5 Final schematic for unmating under load 15
Bibliography 16

Figure 1 – Test circuit diagram for one pole 7
Figure C.1 – PSE and PD model 13
Figure C.2 – Removal of the semiconductors 13
Figure C.3 – Combination of the elements 14
Figure C.4 – Removal of the capacitors and concentration of the inductors 14
Figure C.5 – Final schematic 15

Table 1 – Remote powering test requirements 7
Table 2 – Test group UEL 1 9

Documents
Document Sharing Hub

Full document details: IEC 60512-99-003-2023

INTERNATIONAL ELECTROTECHNICAL COMMISSION

CONNECTORS FOR ELECTRICAL AND ELECTRONIC EQUIPMENT – TESTS AND MEASUREMENTS –

Part 99-003: Endurance test schedules – Test 99c: Test schedule for balanced single-pair connectors separating (unmating) under electrical load

FOREWORD

1) The International Electrotechnical Commission (IEC) is a worldwide organization for standardization comprising all national electrotechnical committees (IEC National Committees). The object of IEC is to promote international co-operation on all questions concerning standardization in the electrical and electronic fields. To this end and in addition to other activities, IEC publishes International Standards, Technical Specifications, Technical Reports, Publicly Available Specifications (PAS) and Guides (hereafter referred to as "IEC Publication(s)"). Their preparation is entrusted to technical committees; any IEC National Committee interested in the subject dealt with may participate in this preparatory work. International, governmental and non-governmental organizations liaising with the IEC also participate in this preparation. IEC collaborates closely with the International Organization for Standardization (ISO) in accordance with conditions determined by agreement between the two organizations.
2) The formal decisions or agreements of IEC on technical matters express, as nearly as possible, an international consensus of opinion on the relevant subjects since each technical committee has representation from all interested IEC National Committees.
3) IEC Publications have the form of recommendations for international use and are accepted by IEC National Committees in that sense. While all reasonable efforts are made to ensure that the technical content of IEC Publications is accurate, IEC cannot be held responsible for the way in which they are used or for any misinterpretation by any end user.
4) In order to promote international uniformity, IEC National Committees undertake to apply IEC Publications transparently to the maximum extent possible in their national and regional publications. Any divergence between any IEC Publication and the corresponding national or regional publication shall be clearly indicated in the latter.
5) IEC itself does not provide any attestation of conformity. Independent certification bodies provide conformity assessment services and, in some areas, access to IEC marks of conformity. IEC is not responsible for any services carried out by independent certification bodies.
6) All users should ensure that they have the latest edition of this publication.
7) No liability shall attach to IEC or its directors, employees, servants or agents including individual experts and members of its technical committees and IEC National Committees for any personal injury, property damage or other damage of any nature whatsoever, whether direct or indirect, or for costs (including legal fees) and expenses arising out of the publication, use of, or reliance upon, this IEC Publication or any other IEC Publications.
8) Attention is drawn to the Normative references cited in this publication. Use of the referenced publications is indispensable for the correct application of this publication.
9) Attention is drawn to the possibility that some of the elements of this IEC Publication may be the subject of patent rights. IEC shall not be held responsible for identifying any or all such patent rights.

IEC 60512-99-003 has been prepared by subcommittee 48B: Electrical connectors, of IEC technical committee 48: Electrical connectors and mechanical structures for electrical and electronic equipment. It is an International Standard.

The text of this International Standard is based on the following documents:

Draft	Report on voting
48B/3058/FDIS	48B/3065/RVD

Full information on the voting for its approval can be found in the report on voting indicated in the above table.

The language used for the development of this International Standard is English.

Documents
Document Sharing Hub

Full document details: IEC 60512-99-003-2023

A list of all parts in the IEC 60512 series, published under the general title *Connectors for electrical and electronic equipment – Tests and measurements*, can be found on the IEC website.

This document was drafted in accordance with ISO/IEC Directives, Part 2, and developed in accordance with ISO/IEC Directives, Part 1 and ISO/IEC Directives, IEC Supplement, available at www.iec.ch/members_experts/refdocs. The main document types developed by IEC are described in greater detail at www.iec.ch/standardsdev/publications.

The committee has decided that the contents of this document will remain unchanged until the stability date indicated on the IEC website under webstore.iec.ch in the data related to the specific document. At this date, the document will be

- reconfirmed,
- withdrawn,
- replaced by a revised edition, or
- amended.

IMPORTANT – The "colour inside" logo on the cover page of this document indicates that it contains colours which are considered to be useful for the correct understanding of its contents. Users should therefore print this document using a colour printer.

Documents
Document Sharing Hub

Full document details: IEC 60512-99-003-2023

CONNECTORS FOR ELECTRICAL AND ELECTRONIC EQUIPMENT – TESTS AND MEASUREMENTS –

Part 99-003: Endurance test schedules – Test 99c: Test schedule for balanced single-pair connectors separating (unmating) under electrical load

1 Scope

This part of IEC 60512 is used for the assessment of connectors within the scope of SC 48B that are used in balanced single-pair communication cabling with remote power, in support of e.g., IEEE 802.3 remote powering applications for point-to-point connections.

The object of this document is to detail a test schedule to determine the ability of sets of single-pair connectors as defined in the IEC 63171 series to withstand a minimum of 100 mechanical operations with electrical load, where an electrical current is being passed through the connector in accordance with IEC 60512-9-3 during the separation (unmating) step.

This document does not cover multidrop powering applications of single-pair connectors.

2 Normative references

The following documents are referred to in the text in such a way that some or all of their content constitutes requirements of this document. For dated references, only the edition cited applies. For undated references, the latest edition of the referenced document (including any amendments) applies.

IEC 60050-581, *International Electrotechnical Vocabulary (IEV) – Part 581: Electromechanical components for electronic equipment*

IEC 60512-1, *Connectors for electrical and electronic equipment – Tests and measurements – Part 1: Generic specification*

IEC 60512-1-1, *Connectors for electronic equipment – Tests and measurements – Part 1-1: General examination – Test 1a: Visual examination*

IEC 60512-2-1, *Connectors for electronic equipment – Tests and measurements – Part 2-1: Electrical continuity and contact resistance tests – Test 2a: Contact resistance – Millivolt level method*

IEC 60512-3-1, *Connectors for electronic equipment – Tests and measurements – Part 3-1: Insulation tests – Test 3a: Insulation resistance*

IEC 60512-4-1, *Connectors for electronic equipment – Tests and measurements – Part 4-1: Voltage stress tests – Test 4a: Voltage proof*

IEC 60512-9-3:2011, *Connectors for electronic equipment – Tests and measurements – Part 9-3: Endurance tests – Test 9c: Mechanical operation (engaging and separating) with electrical load*

IEC 60512-11-7, *Connectors for electronic equipment – Tests and measurements – Part 11-7: Climatic tests – Test 11g: Flowing mixed gas corrosion test*

AVA Documents
Document Sharing Hub

Full document details: IEC 60512-99-003-2023

IEC 63171 (all parts), *Connectors for electrical and electronic equipment – Shielded or unshielded free and fixed connectors for balanced single-pair data transmission with current-carrying capacity – General requirements and tests*

IEEE Std 802.3cg™-2019, *IEEE Standard for Ethernet – Amendment 5*: *Physical Layer Specifications and Management Parameters for 10 Mb/s Operation and Associated Power Delivery over a Balanced single-pair of Conductors*

3 Terms, definitions and acronyms

3.1 Terms and definitions

For the purposes of this document, the terms and definitions of IEC 60050-581, IEC 60512-1, and IEC 63171 apply.

ISO and IEC maintain terminology databases for use in standardisation at the following addresses:

- IEC Electropedia: available at https://www.electropedia.org/
- ISO Online browsing platform: available at https://www.iso.org/obp

3.2 Acronyms

PSE	Power Source Equipment
PD	Powered Device

4 General

Although separating (unmating) connectors under the scope of this document, while used for remote powering, is a misuse of the connector, it may occur in practice.

This test schedule is suitable for verification of separating (unmating) of connectors under electrical load conditions representative for remote powering applications as specified in IEEE 802.3cg. An application-specific current and the associated open circuit voltage are specified, that correspond with the current and voltage of the supported application.

5 Preparation of specimens

The specimen shall consist of a set of mated connectors with its terminations. Specimens shall conform to the relevant IEC connector standard. Each free and fixed connector shall be terminated with 3 m (max.) of the maximum conductor size cable for which it is intended to be terminated, according to the appropriate IEC standard(s). Fixed connectors may alternatively be terminated using a printed circuit board which shall not influence the test results.

For each specimen, both circuits (mated contacts) shall be wired in parallel as given in IEC 60512-9-3, and both circuits shall be assessed at the same time.

6 Test circuit requirements

6.1 General

The values for the circuit components and the details of the test circuit shall be as shown in Figure 1. The elements and the simplification of the test circuit are discussed in Annex B. Annex C provides further insight of the development of the test circuit.

Documents
Document Sharing Hub

Full document details: IEC 60512-99-003-2023

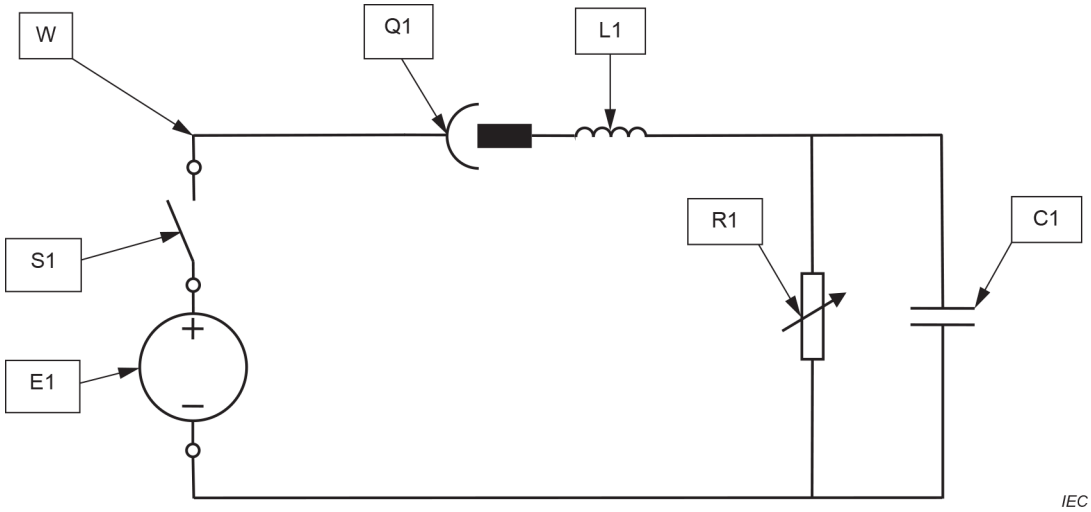

Key

W Cables in accordance with Clause 5

Q1 Specimen under test (one mated set of its pair of contacts)

L1 Inductor, L = 1,88 mH

R1 Variable resistive load (e.g., R = 20 Ω to 50 Ω)

C1 Capacitor, C = 100 µF

E1 Voltage source (see 6.2)

S1 Switch (to mate without voltage on Q1)

Figure 1 – Test circuit diagram for one pole

NOTE 1 Only one circuit of the specimen under test, as referenced in IEC 60512-9-3, is shown in Figure 1 for clarity. Items W, L1, R1 and C1 are replicated for each circuit of the specimen. Items E1 and S1 may be single or multiple. Both circuits of the specimen are wired in parallel with appropriate duplication of circuit components, and both circuits of the specimen are operated simultaneously.

NOTE 2 The variable resistor is used to adjust the current to the specified value.

6.2 Voltage and current

The variable resistive load in Figure 1 shall be set so that the electrical current in each circuit (mated contacts) of the specimen is according to Table 1.

During the separation (unmating) step, the open circuit voltage, shall be as given in Table 1 (test voltage). During the engagement (mating) step, the open circuit voltage shall be 0 V DC by operating the switch before each connector engagement (mating).

Table 1 – Remote powering test requirements

Test voltage	Test current
$48\ ^{+1}_{0}$V DC	$1{,}6\ ^{+0{,}05}_{0}A$

As the variable resistive load is likely to rise due to heating and due to wear of contacts in the connector under test, care should be placed in keeping the value of test current within the specified tolerance range e.g., by means of a suitable feedback control circuit acting on the value of the variable resistor, see Annex A and Annex B for further guidance.

Documents
Document Sharing Hub
Full document details: IEC 60512-99-003-2023

6.3 Auxiliary equipment

Switches may be used to reverse polarity. However, use of such switches shall not influence the test parameters.

7 Test methods

7.1 Mechanical operations with electrical load

An electrical load, current and voltage, as detailed in Table 1, shall be applied to the (engaged (mated)) specimen. For the purpose of this test, one connector shall be fixed and the other separated at a speed of 150 mm/s ± 10 mm/s.

One engagement and one separation constitute one cycle. The test shall be performed according to test 9c of IEC 60512-9-3, but the current shall be applied during the separation step (unmating) only.

25 cycles at one polarity of the DC source shall be performed. The polarity of the DC source shall then be reversed and 25 further cycles at the other polarity shall be performed (50 cycles in total).

7.2 Flowing mixed gas corrosion

A flowing mixed gas corrosion test shall be performed according to test 11g of IEC 60512-11-7, method 1, with a test duration of 4 days. During the test, half of the specimens shall be unmated, and the other half shall be left mated during the test.

8 Test and test schedule – Test group UEL 1

A minimum of 8 specimens shall be prepared for this group; then assessed according to Table 2.

Documents
Document Sharing Hub

Full document details: IEC 60512-99-003-2023

Table 2 – Test group UEL 1

Test Phase	Test			Measurement to be performed		
	Title	IEC 60512 Part No (Test No.)	Severity or condition of test	Title	IEC 60512 Part No (Test No.)	Requirements
UEL 1.1	General examination			Visual examination	1-1 (1a)	There shall be no defects that would impair normal operation
UEL 1.2				Contact resistance-Millivolt level method	2-1 (2a)	As specified in the relevant connector Standard
UEL 1.3			100 V DC Method A Mated connectors	Insulation resistance	3-1 (3a)	500 MΩ minimum
UEL 1.4			Contact to contact 1 000 V DC or 1 000 V AC peak All signal contacts to shield and test panel, as applicable: 1 500 V DC or 1 500 V AC peak Method A Mated connectors	Voltage proof	4-1 (4a)	There shall be no breakdown or flashover
UEL 1.5	Mechanical operations with electrical load	9-3 (9c)	Per 7.1	.		
UEL 1.6				Contact resistance-Millivolt level method	2-1 (2a)	20 mΩ maximum change from initial
UEL 1.7	Flowing mixed gas test.	11-7 (11g)	Per 7.2			
UEL 1.8				Contact resistance-Millivolt level method	2-1 (2a)	20 mΩ maximum change from initial
UEL 1.9	Mechanical operations with electrical load.	9-3 (9c)	Per 7.1			
UEL 1.10			Contact resistance	Contact resistance-Millivolt level method	2-1 (2a)	20 mΩ maximum change from initial
UEL 1.11			100 V DC Method A Mated connectors	Insulation resistance	3-1 (3a)	500 MΩ minimum

Documents
Document Sharing Hub
Full document details: IEC 60512-99-003-2023