IEC 60529

Edition 2.2 2013-08

CONSOLIDATED VERSION

VERSION CONSOLIDÉE

colour inside

Degrees of protection provided by enclosures (IP Code)

Degrés de protection procurés par les enveloppes (Code IP)

IEC 60529:1989+A1:1999+A2:2013

Documents
Document Sharing Hub

Full document details: IEC 60529-2013

THIS PUBLICATION IS COPYRIGHT PROTECTED

Copyright © 2013 IEC, Geneva, Switzerland

All rights reserved. Unless otherwise specified, no part of this publication may be reproduced or utilized in any form or by any means, electronic or mechanical, including photocopying and microfilm, without permission in writing from either IEC or IEC's member National Committee in the country of the requester.
If you have any questions about IEC copyright or have an enquiry about obtaining additional rights to this publication, please contact the address below or your local IEC member National Committee for further information.

Droits de reproduction réservés. Sauf indication contraire, aucune partie de cette publication ne peut être reproduite ni utilisée sous quelque forme que ce soit et par aucun procédé, électronique ou mécanique, y compris la photocopie et les microfilms, sans l'accord écrit de la CEI ou du Comité national de la CEI du pays du demandeur.
Si vous avez des questions sur le copyright de la CEI ou si vous désirez obtenir des droits supplémentaires sur cette publication, utilisez les coordonnées ci-après ou contactez le Comité national de la CEI de votre pays de résidence.

IEC Central Office
3, rue de Varembé
CH-1211 Geneva 20
Switzerland

Tel.: +41 22 919 02 11
Fax: +41 22 919 03 00
info@iec.ch
www.iec.ch

About the IEC

The International Electrotechnical Commission (IEC) is the leading global organization that prepares and publishes International Standards for all electrical, electronic and related technologies.

About IEC publications

The technical content of IEC publications is kept under constant review by the IEC. Please make sure that you have the latest edition, a corrigenda or an amendment might have been published.

Useful links:

IEC publications search - www.iec.ch/searchpub

The advanced search enables you to find IEC publications by a variety of criteria (reference number, text, technical committee,…).
It also gives information on projects, replaced and withdrawn publications.

IEC Just Published - webstore.iec.ch/justpublished

Stay up to date on all new IEC publications. Just Published details all new publications released. Available on-line and also once a month by email.

Electropedia - www.electropedia.org

The world's leading online dictionary of electronic and electrical terms containing more than 30 000 terms and definitions in English and French, with equivalent terms in additional languages. Also known as the International Electrotechnical Vocabulary (IEV) on-line.

Customer Service Centre - webstore.iec.ch/csc

If you wish to give us your feedback on this publication or need further assistance, please contact the Customer Service Centre: csc@iec.ch.

A propos de la CEI

La Commission Electrotechnique Internationale (CEI) est la première organisation mondiale qui élabore et publie des Normes internationales pour tout ce qui a trait à l'électricité, à l'électronique et aux technologies apparentées.

A propos des publications CEI

Le contenu technique des publications de la CEI est constamment revu. Veuillez vous assurer que vous possédez l'édition la plus récente, un corrigendum ou amendement peut avoir été publié.

Liens utiles:

Recherche de publications CEI - www.iec.ch/searchpub

La recherche avancée vous permet de trouver des publications CEI en utilisant différents critères (numéro de référence, texte, comité d'études,…).
Elle donne aussi des informations sur les projets et les publications remplacées ou retirées.

Just Published CEI - webstore.iec.ch/justpublished

Restez informé sur les nouvelles publications de la CEI. Just Published détaille les nouvelles publications parues. Disponible en ligne et aussi une fois par mois par email.

Electropedia - www.electropedia.org

Le premier dictionnaire en ligne au monde de termes électroniques et électriques. Il contient plus de 30 000 termes et définitions en anglais et en français, ainsi que les termes équivalents dans les langues additionnelles. Egalement appelé Vocabulaire Electrotechnique International (VEI) en ligne.

Service Clients - webstore.iec.ch/csc

Si vous désirez nous donner des commentaires sur cette publication ou si vous avez des questions contactez-nous: csc@iec.ch.

Documents
Document Sharing Hub

Full document details: IEC 60529-2013

IEC 60529

Edition 2.2 2013-08

CONSOLIDATED VERSION

VERSION CONSOLIDÉE

colour inside

Degrees of protection provided by enclosures (IP Code)

Degrés de protection procurés par les enveloppes (Code IP)

INTERNATIONAL
ELECTROTECHNICAL
COMMISSION

COMMISSION
ELECTROTECHNIQUE
INTERNATIONALE

ICS 13.260; 29.020

ISBN 978-2-8322-1086-4

Warning! Make sure that you obtained this publication from an authorized distributor.
Attention! Veuillez vous assurer que vous avez obtenu cette publication via un distributeur agréé.

AVA Documents
Document Sharing Hub

® Registered trademark of the International Electrotechnical Commission
Marque déposée de la Commission Electrotechnique Internationale

Full document details: IEC 60529-2013

Documents
Document Sharing Hub

Full document details: IEC 60529-2013

IEC 60529

Edition 2.2 2013-08

REDLINE VERSION

VERSION REDLINE

colour inside

Degrees of protection provided by enclosures (IP Code)

Degrés de protection procurés par les enveloppes (Code IP)

IEC 60529:1989+A1:1999+A2:2013

Documents
Document Sharing Hub

Full document details: IEC 60529-2013

CONTENTS

FOREWORD 5
INTRODUCTION 7
INTRODUCTION TO AMENDMENT 2 8

1 Scope and object 9
2 ~~Object~~Normative references 10
3 Definitions 10
4 Designations 12
4.1 Arrangement of the IP Code 12
4.2 Elements of the IP Code and their meanings 12
4.3 Examples for the use of letters in the IP Code 13
5 Degrees of protection against access to hazardous parts and against solid foreign objects indicated by the first characteristic numeral 14
5.1 Protection against access to hazardous parts 14
5.2 Protection against solid foreign objects 15
6 Degrees of protection against ingress of water indicated by the second characteristic numeral 16
7 Degrees of protection against access to hazardous parts indicated by the additional letter 18
8 Supplementary letters 19
9 Examples of designations with the IP Code 20
9.1 IP Code not using optional letters: 20
9.2 IP Code using optional letters: 20
10 Marking 21
11 General requirements for tests 21
11.1 Atmospheric conditions for water or dust tests 21
11.2 Test samples 21
11.3 Application of test requirements and interpretation of test results 21
11.4 Combination of test conditions for the first characteristic numeral 22
11.5 Empty enclosures 22
12 Tests for protection against access to hazardous parts indicated by the first characteristic numeral 22
12.1 Access probes 22
12.2 Test conditions 22
12.3 Acceptance conditions 24
12.3.1 For low-voltage equipment (rated voltages not exceeding 1 000 V a.c. and 1 500 V d.c.) 24
12.3.2 For high-voltage equipment (rated voltages exceeding 1 000 V a.c. and 1 500 V d.c.) 24
12.3.3 For equipment with hazardous mechanical parts 25
13 Tests for protection against solid foreign objects indicated by the first characteristic numeral 25
13.1 Test means 25
13.2 Test conditions for first characteristic numerals 1, 2, 3, 4 25

AVA Documents
Document Sharing Hub

13.3 Acceptance conditions for first characteristic numerals 1, 2, 3, 4 25
13.4 Dust test for first characteristic numerals 5 and 6 25
13.5 Special conditions for first characteristic numeral 5 27
13.5.1 Test conditions for first characteristic numeral 5 27
13.5.2 Acceptance conditions for first characteristic numeral 5 27
13.6 Special conditions for first characteristic numeral 6 27
13.6.1 Test conditions for first characteristic numeral 6 27
13.6.2 Acceptance conditions for first characteristic numeral 6 27
14 Tests for protection against water indicated by the second characteristic numeral 27
14.1 Test means 27
14.2 Test conditions 28
14.2.1 Test for second characteristic numeral 1 with the drip box 29
14.2.2 Test for second characteristic numeral 2 with the drip box 29
14.2.3 Test for second characteristic numeral 3 with oscillating tube or spray nozzle 30
14.2.4 Test for second characteristic numeral 4 with oscillating tube or spray nozzle 30
14.2.5 Test for second characteristic numeral 5 with the 6,3 mm nozzle 31
14.2.6 Test for second characteristic numeral 6 with the 12,5 mm nozzle 31
14.2.7 Test for second characteristic numeral 7: temporary immersion between 0,15 m and 1 m 31
14.2.8 Test for second characteristic numeral 8: continuous immersion subject to agreement 32
14.2.9 Test for second characteristic numeral 9 with a spray nozzle 32
14.3 Acceptance conditions 32
15 Tests for protection against access to hazardous parts indicated by the additional letter 33
15.1 Access probes 33
15.2 Test conditions 33
15.3 Acceptance conditions 33

Annex A (informative) Examples of IP coding for the verification of protection of low-voltage equipment against access to hazardous parts 43
Annex B (informative) Summary of responsibilities of relevant technical committees 49

Bibliography 51

Figure 1 – Jointed test finger 34
Figure 2 – Test device to verify protection against dust (dust chamber) 35
Figure 3 – Test device to verify protection against vertically falling water drops (drip box) 36
Figure 4 – Test device to verify protection against spraying and splashing water; second characteristic numerals 3 and 4 (oscillating tube) 37
Figure 5 – Hand-held device to verify protection against spraying and splashing water; second characteristic numerals 3 and 4 (spray nozzle) 38
Figure 6 – Test device to verify protection against water jets (hose nozzle) 38
Figure 7 – Fan jet nozzle dimensions 39

AVA Documents
Document Sharing Hub
Full document details: IEC 60529-2013

Figure 8 – Fan jet nozzle resulting dimensions of spraying hole for checking purpose 39
Figure 9 – Fan jet nozzle examples 40
Figure 10 – Set-up for measuring the impact force of the water jet for determining the protection against high-pressure and temperature water jet, degree of protection against ingress of water IP X9 41
Figure 11 – Impact force distribution 41
Figure 12 – Test device to verify protection against high pressure and temperature water jet for small enclosures 42

Table 1 – Degrees of protection against access to hazardous parts indicated by the first characteristic numeral 15
Table 2 – Degrees of protection against solid foreign objects indicated by the first characteristic numeral 16
Table 3 – Degrees of protection against water indicated by the second characteristic numeral 18
Table 4 – Degrees of protection against access to hazardous parts indicated by the additional letter 19
Table 5 – Test conditions for degrees of protection indicated by the first characteristic numeral 22
Table 6 – Access probes for the tests for protection of persons against access to hazardous parts 23
Table 7 – Test means for the tests for protection against solid foreign objects 25
Table 8 – Test means and main test conditions for the tests for protection against water 28
Table 9 – Total water flow rate q_V under IPX3 and IPX4 test conditions – Mean flow rate per hole q_{Vl} = 0,07 l/min 31

IP Codes of examples in annex A 48

Documents
Document Sharing Hub
Full document details: IEC 60529-2013

INTERNATIONAL ELECTROTECHNICAL COMMISSION

DEGREES OF PROTECTION PROVIDED BY ENCLOSURES (IP Code)

FOREWORD

1) The International Electrotechnical Commission (IEC) is a worldwide organization for standardization comprising all national electrotechnical committees (IEC National Committees). The object of IEC is to promote international co-operation on all questions concerning standardization in the electrical and electronic fields. To this end and in addition to other activities, IEC publishes International Standards, Technical Specifications, Technical Reports, Publicly Available Specifications (PAS) and Guides (hereafter referred to as "IEC Publication(s)"). Their preparation is entrusted to technical committees; any IEC National Committee interested in the subject dealt with may participate in this preparatory work. International, governmental and non-governmental organizations liaising with the IEC also participate in this preparation. IEC collaborates closely with the International Organization for Standardization (ISO) in accordance with conditions determined by agreement between the two organizations.
2) The formal decisions or agreements of IEC on technical matters express, as nearly as possible, an international consensus of opinion on the relevant subjects since each technical committee has representation from all interested IEC National Committees.
3) IEC Publications have the form of recommendations for international use and are accepted by IEC National Committees in that sense. While all reasonable efforts are made to ensure that the technical content of IEC Publications is accurate, IEC cannot be held responsible for the way in which they are used or for any misinterpretation by any end user.
4) In order to promote international uniformity, IEC National Committees undertake to apply IEC Publications transparently to the maximum extent possible in their national and regional publications. Any divergence between any IEC Publication and the corresponding national or regional publication shall be clearly indicated in the latter.
5) IEC itself does not provide any attestation of conformity. Independent certification bodies provide conformity assessment services and, in some areas, access to IEC marks of conformity. IEC is not responsible for any services carried out by independent certification bodies.
6) All users should ensure that they have the latest edition of this publication.
7) No liability shall attach to IEC or its directors, employees, servants or agents including individual experts and members of its technical committees and IEC National Committees for any personal injury, property damage or other damage of any nature whatsoever, whether direct or indirect, or for costs (including legal fees) and expenses arising out of the publication, use of, or reliance upon, this IEC Publication or any other IEC Publications.
8) Attention is drawn to the Normative references cited in this publication. Use of the referenced publications is indispensable for the correct application of this publication.
9) Attention is drawn to the possibility that some of the elements of this IEC Publication may be the subject of patent rights. IEC shall not be held responsible for identifying any or all such patent rights.

This Consolidated version of IEC 60529 bears the edition number 2.2. It consists of the second edition (1989) [documents 70(CO)13 + 70(CO)15 and 70(CO)16 + 70(CO)17], its corrigendum 1 (2003), its corrigendum 2 (2007), its corrigendum 3 (2009), its amendment 1 (1999) [documents 70/91/FDIS and 70/92/RVD] and its amendment 2 [documents 70/122/FDIS and 70/123/RVD]. The technical content is identical to the base edition and its amendments.

In this Redline version, a vertical line in the margin shows where the technical content is modified by amendments 1 and 2. Additions and deletions are displayed in red, with deletions being struck through. A separate Final version with all changes accepted is available in this publication.

This publication has been prepared for user convenience.

AVA Documents
Document Sharing Hub

Full document details: IEC 60529-2013

International Standard IEC 60529 has been prepared by technical committee 70: Degrees of protection by enclosures.

Annexes A and B are for information only.

This publication has been drafted in accordance with the ISO/IEC Directives, Part 2.

The committee has decided that the contents of the base publication and its amendments will remain unchanged until the stability date indicated on the IEC web site under "http://webstore.iec.ch" in the data related to the specific publication. At this date, the publication will be

- reconfirmed,
- withdrawn,
- replaced by a revised edition, or
- amended.

The contents of the corrigenda of October 2013 and May 2015 have been included in this copy.

IMPORTANT – The "colour inside" logo on the cover page of this publication indicates that it contains colours which are considered to be useful for the correct understanding of its contents. Users should therefore print this publication using a colour printer.

Documents
Document Sharing Hub

Full document details: IEC 60529-2013

INTRODUCTION

This standard describes a system for classifying the degrees of protection provided by the enclosures of electrical equipment. Whilst this system is suitable for use with most types of electrical equipment, it should not be assumed that all the listed degrees of protection are applicable to a particular type of equipment. The manufacturer of the equipment should be consulted to determine the degrees of protection available and the parts of equipment to which the stated degree of protection applies.

The adoption of this classification system, wherever possible, Will promote uniformity in methods of describing the protection provided by the enclosure and in the tests to prove the various degrees of protection. It should also reduce the number of types of test devices necessary to test a wide range. of products.

This second edition of IEC 60529 takes account of experiences with the first edition, and clarifies the requirements. It provides for an optional extension of the IP Code by an additional letter A, B, C, or D if the actual protection of persons against access to hazardous parts is higher than that indicated by the first characteristic numeral.

In general, enclosures with an IP coding to the first edition would be eligible for the same code according to this edition.

Documents
Document Sharing Hub

Full document details: IEC 60529-2013

INTRODUCTION TO AMENDMENT 2

This Amendment 2 introduces a new degree of protection IP X9 whereas no modifications of the existing degrees of protection are made.

Thus neither additional tests nor modifications of the existing certificates should be requested in case of enclosures providing a different IP code.

Documents
Document Sharing Hub

Full document details: IEC 60529-2013

DEGREES OF PROTECTION PROVIDED BY ENCLOSURES (IP Code)

1 Scope and object

This standard applies to the classification of degrees of protection provided by enclosures for electrical equipment with a rated voltage not exceeding 72,5 kV.

~~2 Object~~

The object of this standard is to give:

a) *Definitions* for degrees of protection provided by enclosures of electrical equipment as regards:

   1) protection of persons against access to hazardous parts inside the enclosure;

   2) protection of the equipment inside the enclosure against ingress of solid foreign objects;

   3) protection of the equipment inside the enclosure against harmful effects due to the ingress of water.

b) *Designations* for these degrees of protection.

c) *Requirements* for each designation.

d) *Tests* to be performed to verify that the enclosure meets the requirements of this standard.

It will remain the responsibility of individual technical committees to decide on the extent and manner in which, the classification is used in their standards and to define “enclosure” as it applies to their equipment. However, it is recommended that for a given classification the tests do not differ from those specified in this standard. If necessary, complementary requirements may be included in the relevant product standard. A guide for the details to be specified in relevant product standards is given in annex B.

For a particular type of equipment, a technical committee may specify different requirements provided that at least the same level of safety is ensured.

This standard deals only with enclosures that are in all other respects suitable for their intended use as specified in the relevant product standard and which from the point of view of materials and workmanship ensure that the claimed degrees of protection are maintained under the normal conditions of use.

This standard is also applicable to empty enclosures provided that the general test requirements are met and that the selected degree of protection is suitable for the type of equipment to be protected.

Measures to protect both the enclosure and the equipment inside the enclosure against external influences or conditions such as

– mechanical impacts
– corrosion
– corrosive solvents (for example, cutting liquids)
– fungus
– vermin
– solar radiation
– icing
– moisture (for example, produced by condensation)
– explosive atmospheres

AVA Documents
Document Sharing Hub

Full document details: IEC 60529-2013

and the protection against contact with hazardous moving parts external to the enclosure (such as fans), are matters for the relevant product standard to be protected.

Barriers external to the enclosure and not attached to it and obstacles which have been provided solely for the safety of personnel are not considered as a part of the enclosure and are not dealt with in this standard.

2 Normative references

The following referenced documents are indispensable for the application of this document. For dated references, only the edition cited applies. For undated references, the latest edition of the referenced document (including any amendments) applies.

IEC 60050-195:1998, *International Electrotechnical Vocabulary (IEV) – Part 195: Earthing and protection against electric shock*

IEC 60050(826):1982, *International Electrotechnical Vocabulary (IEV) – Chapter 826: Electrical installations of buildings*

IEC 60068-1:1988, *Environmental testing – Part 1: General and guidance*

IEC 60068-2-68:1994, *Environmental testing – Part 2: Tests – Test L: Dust and sand*

IEC 60071-2:1996, *Insulation co-ordination – Part 2: Application guide*

3 Definitions

For the purpose of this standard, the following definitions apply:

3.1
enclosure
a part providing protection of equipment against certain external influences and, in any direction, protection against direct contact [IEV 826-03-12]*.

NOTE This definition taken from the existing International Electrotechnical Vocabulary (IEV) needs the following explanations under the scope of this standard:

1) Enclosures provide protection of persons or livestock against access to hazardous parts.
2) Barriers, shapes of openings or any other means – whether attached to the enclosure or formed by the enclosed equipment – suitable to prevent or limit the penetration of the specified test probes are considered as a part of the enclosure, except when they can be removed without the use of a key or tool.

3.2
direct contact
contact of persons or livestock with live parts [IEV 826-03-05]

NOTE This IEV definition is given for information. In this standard “direct contact” is replaced by “access to hazardous parts”.

3.3
degree of protection
the extent of protection provided by an enclosure against access to hazardous parts, against. ingress of solid foreign objects and/or against ingress of water and verified by standardized test methods

* IEC 60050(826).

Documents
Document Sharing Hub

Full document details: IEC 60529-2013

3.4
IP Code
a coding system to indicate the degrees of protection provided by an enclosure against access to hazardous parts, ingress of solid foreign objects, ingress of water and to give additional information in connection with such protection

3.5
hazardous part
a part that is hazardous to approach or touch

3.5.1
hazardous live part
a live part which, under certain conditions of external influences, can give an electric shock (see IEC ~~536, at present Document 64(CO)196~~ 60050-195, 195-06-05)

3.5.2
hazardous mechanical part
a moving part, other than a smooth rotating shaft, that is hazardous to touch

3.6
protection provided by an enclosure against access to hazardous parts
the protection of persons against

– contact with hazardous low-voltage live parts
– contact with hazardous mechanical parts
– approach to hazardous high-voltage live parts below adequate clearance inside an enclosure

NOTE This protection may be provided
– by means of the enclosure itself,
– by means of barriers as part of the enclosure or distances inside the enclosure.

3.7
adequate clearance for protection against access to hazardous parts
a distance to prevent contact or approach of an access probe to a hazardous part

3.8
access probe
a test probe simulating in a conventional manner a part of a person or a tool, or the like, held by a person to verify adequate clearance from hazardous parts

3.9
object probe
a test probe simulating a solid foreign object to verify the possibility of ingress into an enclosure

3.10
opening
a gap or aperture in an enclosure which exists or may be formed by the application of a test probe at the specified force

Documents
Document Sharing Hub
Full document details: IEC 60529-2013

4 Designations

The degree of protection provided by an enclosure is indicated by the IP Code in the following way:

4.1 Arrangement of the IP Code

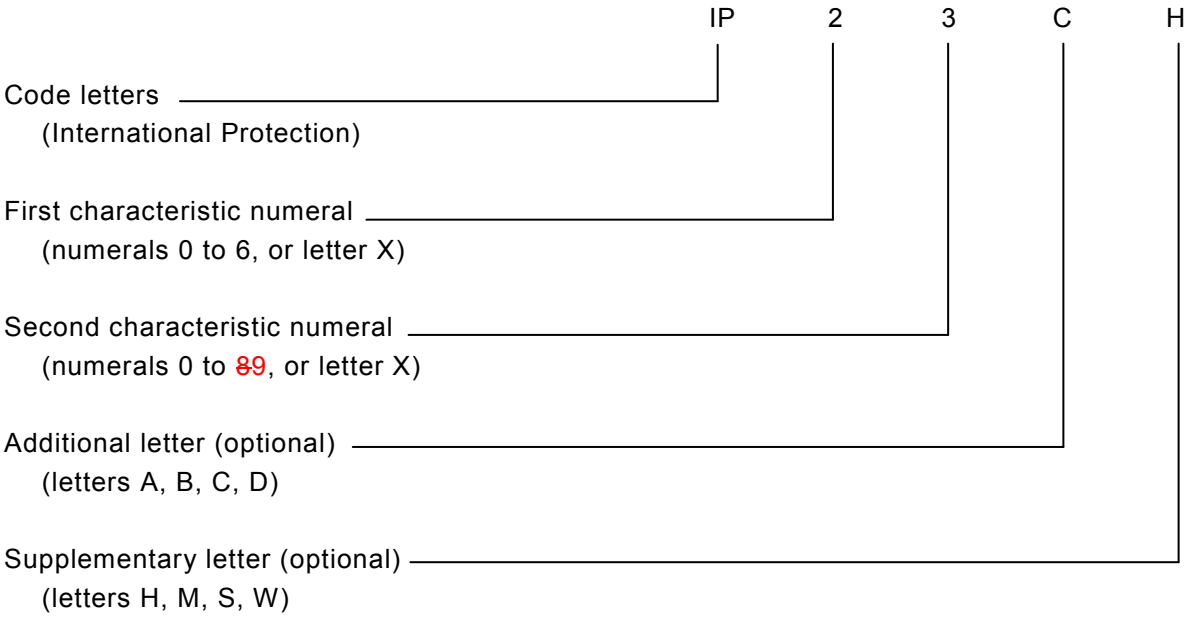

Where a characteristic numeral is not required to be specified, it shall be replaced by the letter “X” (“XX” if both numerals are omitted).

Additional letters and/or supplementary letters may be omitted without replacement.

Where more than one supplementary letter is used, the alphabetic sequence shall apply.

If an enclosure provides different degrees of protection for different intended mounting arrangements, the relevant degrees of protection shall be indicated by the manufacturer in the instructions related to the respective mounting arrangements.

Details for the marking of an enclosure are given in clause 10.

4.2 Elements of the IP Code and their meanings

A brief description of the IP Code elements is given in the following chart. Full details are specified in the clauses indicated in the last column.

Documents
Document Sharing Hub
Full document details: IEC 60529-2013

Element	Numerals or letters	Meaning for the protection of *equipment*	Meaning for the protection of *persons*	Ref.
Code letters	IP	–	–	–
First characteristic numeral	0 1 2 3 4 5 6	Against ingress of solid foreign objects (non-protected) ≥ 50 mm diameter ≥ 12,5 mm diameter ≥ 2,5 mm diameter ≥ 1,0 mm diameter dust-protected dust-tight	Against access to hazardous parts with (non-protected) back of hand finger tool wire wire wire	Cl. 5
Second characteristic numeral	0 1 2 3 4 5 6 7 8 9	Against ingress of water with harmful effects (non-protected) vertically dripping dripping (15° tilted) spraying splashing jetting powerful jetting temporary immersion continuous immersion High pressure and temperature water jet	–	Cl. 6
Additional letter (optional)	A B C D	–	Against access to hazardous parts with: back of hand finger tool wire	Cl. 7
Supplementary letter (optional)	H M S W	Supplementary information specific to: High voltage apparatus Motion during water test Stationary during water test Weather conditions	–	Cl. 8

4.3 Examples for the use of letters in the IP Code

The following examples are to explain the use and arrangement of letters in the IP Code.

For more comprehensive examples see clause 9.

IP44 – no letters, no options;

IPX5 – omitting first characteristic numeral;

IP2X – omitting second characteristic numeral;

IP20C – using additional letter;

IPXXC – omitting both characteristic numerals, using additional letter;

IPX1C – omitting first characteristic numeral, using additional letter;

IP3XD – omitting second characteristic numeral, using additional letter;

IP23S – using supplementary letter;

IP21CM – using additional letter and supplementary letter;

AVA Documents Document Sharing Hub

Full document details: IEC 60529-2013

IPX5/IPX7/IPX9 – giving ~~two~~ three ~~different~~ degrees of protection by an enclosure against ~~both~~ water jets, ~~and~~ temporary immersion and high pressure and temperature water jet for "versatile" application.

5 Degrees of protection against access to hazardous parts and against solid foreign objects indicated by the first characteristic numeral

The designation with a first characteristic numeral implies that conditions stated in both 5.1 and 5.2 are met.

The first characteristic numeral indicates that:

– the enclosure provides protection of persons against access to hazardous parts by preventing or limiting the ingress of a part of the human body or an object held by a person;

and simultaneously

– the enclosure provides protection of equipment against the ingress of solid foreign objects.

An enclosure shall only be designated with a stated degree of protection indicated by the first characteristic numeral if it also complies with all lower degrees of protection.

However, the tests establishing compliance with any one of the lower degrees of protection need not necessarily be carried out provided that these tests would obviously be met if applied.

5.1 Protection against access to hazardous parts

Table 1 gives brief descriptions and definitions for the degrees of protection against access to hazardous parts.

Degrees of protection listed in this table shall be specified only by the first characteristic numeral and not by reference to the brief description or definition.

To comply with the conditions of the first characteristic numeral, adequate clearance shall be kept between the access probe and hazardous parts.

The tests are specified in clause 12.

Documents
Document Sharing Hub

Full document details: IEC 60529-2013

Table 1 – Degrees of protection against access to hazardous parts indicated by the first characteristic numeral

First characteristic numeral	Degree of protection		Test conditions, see
	Brief description	Definition	
0	Non-protected	–	–
1	Protected against access to hazardous parts with the back of a hand	The access probe, sphere of 50 mm ∅, shall have adequate clearance from hazardous parts	12.2
2	Protected against access to hazardous parts with a finger	The jointed test finger of 12 mm ∅, 80 mm length, shall have adequate clearance form hazardous parts	12.2
3	Protected against access to hazardous parts with a tool	The access probe of 2,5 mm ∅ shall not penetrate	12.2
4	Protected against access to hazardous parts with a wire	The access probe of 1,0 mm ∅ shall not penetrate	12.2
5	Protected against access to hazardous parts with a wire	The access probe of 1,0 mm ∅ shall not penetrate	12.2
6	Protected against access to hazardous parts with a wire	The access probe of 1,0 mm ∅ shall not penetrate	12.2

NOTE In the case of the first characteristic numerals 3, 4, 5 and 6, protection against access to hazardous parts is satisfied if adequate clearance is kept. The adequate clearance should be specified by the relevant product committee in accordance with 12.3.

Due to the simultaneous requirement specified in table 2, the definition "shall not penetrate" is given in table 1.

5.2 Protection against solid foreign objects

Table 2 gives brief descriptions and the definitions for the degrees of protection against the penetration of solid foreign objects including dust.

Degrees of protection listed in this table shall only be specified by the first characteristic numeral and not by reference to the brief description or definition.

The protection against the ingress of solid foreign objects implies that the object probes up to numeral 2 in table 2 shall not fully penetrate the enclosure. This means that the full diameter of the sphere shall not pass through an opening. in the enclosure. Object probes for numerals 3 and 4 shall not penetrate the enclosure at all.

Dust-protected enclosures to numeral 5 allow a limited quantity of dust to penetrate under certain conditions.

Dust-tight enclosures to numeral 6 do not allow any dust to penetrate.

NOTE Enclosures assigned a first characteristic numeral of 1 to 4 generally exclude both regularly and irregularly shaped solid foreign objects provided that three mutually perpendicular dimensions of the object exceed the appropriate figure in column 3 of table 2.

The tests are specified in clause 13.

Documents
Document Sharing Hub

Full document details: IEC 60529-2013

Table 2 – Degrees of protection against solid foreign objects indicated by the first characteristic numeral

First characteristic numeral	Degree of protection		Test conditions, see
	Brief description	Definition	
0	Non-protected	–	–
1	Protected against solid foreign objects of 50 mm ∅ and greater	The object probe, sphere of 50 mm ∅, shall not fully penetrate [1)]	13.2
2	Protected against solid foreign objects of 12,5 mm ∅ and greater	The object probe, sphere of 12,5 mm ∅, shall not fully penetrate [1)]	13.2
3	Protected against solid foreign objects of 2,5 mm ∅ and greater	The object probe, sphere of 2,5 mm ∅, shall not penetrate at all [1)]	13.2
4	Protected against solid foreign objects of 1,0 mm ∅ and greater	The object probe of 1,0 mm ∅, shall not penetrate at all [1)]	13.2
5	Dust-protected	Ingress of dust is not totally prevented, but dust shall not penetrate in a quantity to interfere with satisfactory operation of the apparatus or to impair safety	13.4 13.5
6	Dust-tight	No ingress of dust	13.4 13.~~5~~6

[1)] The full diameter of the object probe shall not pass through an opening of the enclosure.

6 Degrees of protection against ingress of water indicated by the second characteristic numeral

The second characteristic numeral indicates the degree of protection provided by enclosures with respect to harmful effects on the equipment due to the ingress of water.

The tests for the second characteristic numeral are carried out with fresh water. The actual protection may not be satisfactory if cleaning operations with high pressure and temperature water jet outside the requirements of second characteristic numeral 9 and/or solvents are used.

Table 3 gives brief descriptions and definitions of the protection for the degrees represented by the second characteristic numeral.

Degrees of protection listed in this table shall be specified only by the second characteristic numeral and not by reference to the brief description or definition.

The tests are specified in clause 14.

Up to and including second characteristic numeral 6, the designation implies compliance also with the requirements for all lower characteristic numerals. However, the tests establishing compliance with any one of the lower degrees of protection need not necessarily be carried out provided that these tests obviously would be met if applied.

An enclosure designated with second characteristic numeral ~~7 or 8~~ 9 only is considered unsuitable for exposure to water jets (designated by second characteristic numeral 5 or 6) and immersion in water (designated by second characteristic numeral 7 or 8) and need not comply with requirements for numeral 5 ~~or~~ ,6,7 or 8 unless it is ~~dual~~ multiple coded as follows:

AVA Documents Document Sharing Hub

Enclosure passes test for:		Designation and marking	Range of application
water jets second characteristic numeral	temporary/continuous immersion second characteristic numeral		
5	7	IPX5/IPX7	Versatile
~~65~~	~~78~~	IPX~~65~~/IPX~~78~~	Versatile
~~56~~	~~87~~	IPX~~56~~/IPX~~87~~	Versatile
6	8	IPX6/IPX8	Versatile
~~–9~~	7	IPX7/IPX9	~~Restricted~~ Versatile
~~–9~~	8	IPX8/IPX9	~~Restricted~~ Versatile
5 and 9	7	IPX5/IPX7/IPX9	Versatile
5 and 9	8	IPX5/IPX8/IPX9	Versatile
6 and 9	7	IPX6/IPX7/IPX9	Versatile
6 and 9	8	IPX6/IPX8/IPX9	Versatile
–	7	IPX7	Restricted
–	8	IPX8	Restricted
9	–	IPX9	Restricted
5 and 9	–	IPX5/IPX9	Versatile
6 and 9	–	IPX6/IPX9	Versatile

Enclosures for “versatile” application indicated in the last column shall meet requirements for exposure to both water jets and temporary or continuous immersion.

Enclosures for “restricted” application indicated in the last column are considered suitable only for ~~temporary or continuous immersion and unsuitable for exposure to water jets~~ the conditions to which they were tested.

Documents
Document Sharing Hub
Full document details: IEC 60529-2013

Table 3 – Degrees of protection against water indicated by the second characteristic numeral

Second characteristic numeral	Degree of protection		Test conditions, see
	Brief description	Definition	
0	Non-protected	–	–
1	Protected against vertically falling water drops	Vertically falling drops shall have no harmful effects	14.2.1
2	Protected against vertically falling water drops when enclosure tilted up to 15°	Vertically falling drops shall have no harmful effects when the enclosure is tilted at any angle up to 15° on either side of the vertical	14.2.2
3	Protected against spraying water	Water sprayed at an angle up to 60° on either side of the vertical shall have no harmful effects	14.2.3
4	Protected against splashing water	Water splashed against the enclosure from any direction shall have no harmful effects	14.2.4
5	Protected against water jets	Water projected in jets against the enclosure from any direction shall have no harmful effects	14.2.5
6	Protected against powerful water jets	Water projected in powerful jets against the enclosure from any direction shall have no harmful effects	14.2.6
7	Protected against the effects of temporary immersion in water	Ingress of water in quantities causing harmful effects shall not be possible when the enclosure is temporarily immersed in water under standardized conditions of pressure and time	14.2.7
8	Protected against the effects of continuous immersion in water	Ingress of water in quantities causing harmful effects shall not be possible when the enclosure is continuously immersed in water under conditions which shall be agreed between manufacturer and user but which are more severe than for numeral 7	14.2.8
9	Protected against high pressure and temperature water jets	Water projected at high pressure and high temperature against the enclosure from any direction shall not have harmful effects	14.2.9

7 Degrees of protection against access to hazardous parts indicated by the additional letter

The additional letter indicates the degree of protection of persons against access to hazardous parts.

Additional letters are only used

– if the actual protection against access to hazardous parts is higher than that indicated by the first characteristic numeral

– or if only the protection against access to hazardous parts is indicated, the first characteristic numeral being then replaced by an X.

For example, such higher protection may be provided by barriers, suitable shape of openings or distances inside the enclosure.

Table 4 gives access probes considered by convention as representative of parts of the human body or objects held by a person and the definitions for the degrees of protection against access to hazardous parts, indicated by additional letters.

AVA Documents Document Sharing Hub

An enclosure shall only be designated with a stated degree of protection indicated by the additional letter if the enclosure also complies with all lower degrees of protection. However, the tests establishing compliance with any one of the lower degrees of protection need not necessarily be carried out provided that these tests obviously would be met if applied.

The tests are specified in clause 15.

See annex A for examples of the IP coding.

Table 4 – Degrees of protection against access to hazardous parts indicated by the additional letter

Additional letter	Degree of protection		Test conditions, see
	Brief description	Definition	
A	Protected against access with the back of the hand	The access probe, sphere of 50 mm ∅, shall have adequate clearance from hazardous parts	15.2
B	Protected against access with a finger	The jointed test finger of 12 mm ∅, 80 mm length, shall have adequate clearance form hazardous parts	15.2
C	Protected against access with a tool	The access probe of 2,5 mm ∅, 100 mm length, shall have adequate clearance from hazardous parts	15.2
D	Protected against access with a wire	The access probe of 1,0 mm ∅, 100 mm length, shall have adequate clearance from hazardous parts	15.2

8 Supplementary letters

In the relevant product standard, supplementary information may be indicated by a supplementary letter following the second characteristic numeral or the additional letter.

Such exceptional cases shall conform with the requirements of this basic safety standard and the product standard shall state clearly the additional procedure to be carried out during tests for such a classification.

The letters listed below have already been designated and have the significance as stated:

Letter	Significance
H	High-voltage apparatus
M	Tested for harmful effects due to the ingress of water when the movable parts of the equipment (for example, the rotor of a rotating machine) are in motion
S	Tested for harmful effects due to the ingress of water when the movable parts of the equipment (for example, the rotor of a rotating machine) are stationary
W	Suitable for use under specified weather conditions and provided with additional protective features or processes

NOTE In the first edition of IEC 60529 the letter “W” with the same meaning was placed immediately after the code letters “IP”.

Other letters may be used in product standards.*

* However, in order to avoid any duplicate of supplementary letters the Secretariat of technical committee 70 should be consulted before any new letter is introduced by another technical committee.

AVA Documents
Document Sharing Hub

Full document details: IEC 60529-2013

The absence of the letters S and M implies that the degree of protection does not depend on whether parts of the equipment are in motion or not. This may necessitate tests being done under both conditions. However, the test establishing compliance with one of these conditions is generally sufficient, provided that the test in the other condition obviously would be met if applied.

9 Examples of designations with the IP Code

9.1 IP Code not using optional letters:

IP 3 4

Code letters

1st characteristic numeral

2nd characteristic numeral

An enclosure with this designation (IP Code)

(3) – protects persons, handling tools having a diameter of 2,5 mm and greater, against access to hazardous parts;

– protects the equipment inside the enclosure against ingress of solid foreign objects having a diameter of 2,5 mm and greater;

(4) – protects the equipment inside the enclosure against harmful effects due to water splashed against the enclosure from any direction.

9.2 IP Code using optional letters:

IP 2 3 C S

Code letters

1st characteristic numeral

2nd characteristic numeral

Additional letter

Supplementary letter

An enclosure with this designation (IP Code)

(2) – protects persons against access to hazardous parts with fingers;

– protects the equipment inside the enclosure against ingress of solid foreign objects having a diameter of 12,5 mm and greater;

(3) – protects the equipment inside the enclosure against the harmful effects due to water sprayed against the enclosure;

(C) – protects persons handling tools having a diameter of 2,5 mm and greater and a length not exceeding 100 mm against access to hazardous parts (the tool may penetrate the enclosure up to its full length);

(S) – is tested for protection against harmful effects due to the ingress of water when all the parts of the equipment are stationary.

AVA Documents
Document Sharing Hub

Full document details: IEC 60529-2013

10 Marking

The requirements for marking shall be specified in the relevant product standard.

Where appropriate, such a standard should also specify the method of marking which is to be used when

– one part of an enclosure has a different degree of protection to that of another part of the same enclosure;
– the mounting position has an influence on the degree of protection;
– the maximum immersion depth and time are indicated.

11 General requirements for tests

11.1 Atmospheric conditions for water or dust tests

Unless otherwise specified in the relevant product standard, the tests should be carried out under the standard atmospheric conditions described in IEC 60068-1.

The recommended atmospheric conditions during the tests are as follows:

Temperature range:	15 °C to 35 °C
Relative humidity:	25 % to 75 %
Air pressure:	86 kPa to 106 kPa (860 mbar to 1 060 mbar).

11.2 Test samples

The tests specified in this standard are type tests.

Unless otherwise specified in a relevant product standard, the test samples for each test shall be in a clean and new condition, with all parts in place and mounted in the manner stated by the manufacturer.

If it is impracticable to test the complete equipment, representative parts or smaller equipment having the same full-scale design details shall be tested.

The relevant product standard shall specify details such as:

– the number of samples to be tested;
– conditions for mounting, assembling and positioning of the samples, for example by the use of an artificial surface (ceiling, floor or wall);

  NOTE This also applies to equipment intended to be united with other relevant equipment, for example, components which can be used either alone or in an assembly;
– the pre-conditioning, if any, which is to be used;
– whether to be tested energized or not;
– whether to be tested with its parts in motion or not.

In the absence of such specification, the manufacturer's instructions shall apply.

11.3 Application of test requirements and interpretation of test results

The application of the general requirements for tests and the acceptance conditions for equipment containing drain-holes or ventilation openings is the responsibility of the relevant technical committee.

AVA Documents
Document Sharing Hub

Full document details: IEC 60529-2013

In the absence of such specification the requirement of this standard shall apply.

The interpretation of test results is the responsibility of the relevant technical committee. In the absence of a specification the acceptance conditions of this standard shall at least apply.

11.4 Combination of test conditions for the first characteristic numeral

Designation with a first characteristic numeral implies that all test conditions are met for this numeral:

Table 5 – Test conditions for degrees of protection indicated by the first characteristic numeral

First characteristic numeral	Test for protection against	
	access to hazardous parts	solid foreign objects
0	No test required	No test required
1	The sphere of 50 mm ∅ shall not fully penetrate and adequate clearance shall be kept	
2	The jointed test finger may penetrate up to its 80 mm length, but adequate clearance shall be kept	The sphere of 12,5 mm ∅ shall not fully penetrate
3	The test rod of 2,5 mm ∅ shall not penetrate and adequate clearance shall be kept	
4	The test wire of 1,0 mm ∅ shall not penetrate and adequate clearance shall be kept	
5	The test wire of 1,0 mm 0 shall not penetrate and adequate clearance shall be kept	Dust-protected as specified in table 2
6	The test wire of 1,0 mm 0 shall not penetrate and adequate clearance shall be kept	Dust-tight as specified in table 2
In the case of the first characteristic numerals 1 and 2, “not fully penetrate” means that the full diameter of the sphere shall not pass through an opening of the enclosure.		

11.5 Empty enclosures

If the enclosure is tested without equipment inside, detailed requirements shall be indicated by the enclosure manufacturer in his instructions for the arrangement and spacing of hazardous parts or parts which might be affected by the penetration of foreign objects or water.

The manufacturer of the final assembly shall ensure that after the electrical equipment is enclosed the enclosure meets the declared degree of protection of the final product.

12 Tests for protection against access to hazardous parts indicated by the first characteristic numeral

12.1 Access probes

Access probes to test the protection of persons against access to hazardous parts are given in table 6.

12.2 Test conditions

The access probe is pushed against or (in case of the test for first characteristic numeral 2) inserted through any openings of the enclosure with the force specified in table 6.

Documents
Document Sharing Hub
Full document details: IEC 60529-2013

For tests on low-voltage equipment, a low-voltage supply (of not less than 40 V and not more than 50 V) in series with a suitable lamp should be connected between the probe and the hazardous parts inside the enclosure. Hazardous live parts covered only with varnish or paint, or protected by oxidation or by a similar process, are covered by a metal foil electrically connected to those parts which are normally live in operation.

The signal-circuit method should also be applied to the hazardous moving parts of high-voltage equipment.
Internal moving parts may be operated slowly, where this is possible.

Table 6 – Access probes for the tests for protection of persons against access to hazardous parts

First numeral	Addit. letter	Access probe	Test force
1	A	Sphere 50 mm diameter 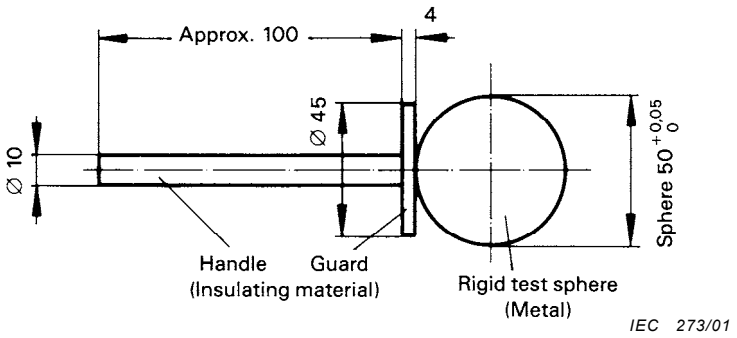	50 N ± 10 %
2	B	Jointed test finger 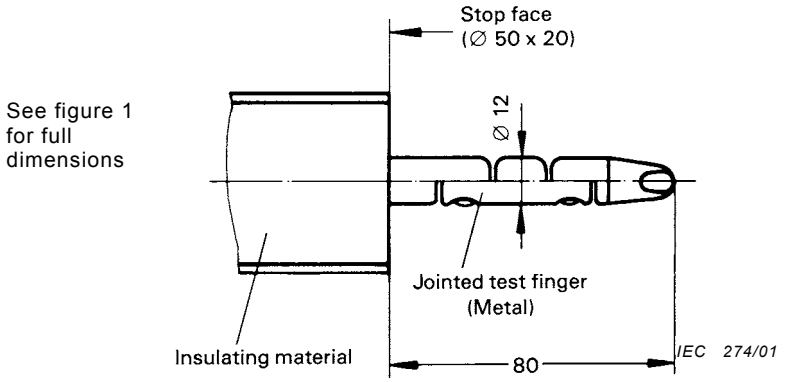	10 N ± 10 %
3	C	Test rod 2,5 mm diameter, 100 mm long 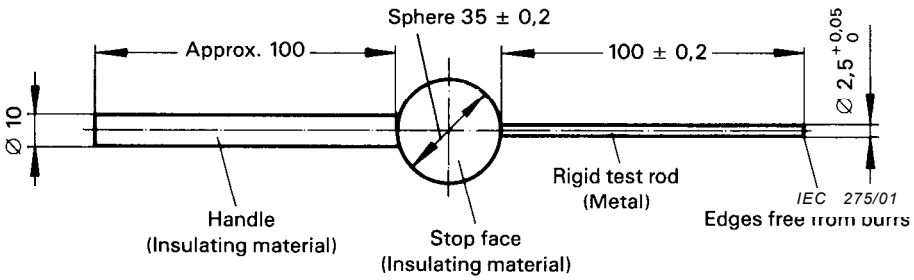	3 N ± 10 %

Documents
Document Sharing Hub

4, 5, 6	D	Test wire 1,0 mm diameter, 100 mm long 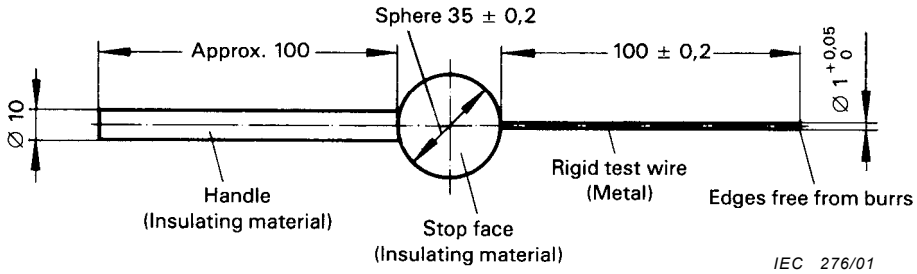	1 N ± 10 %

12.3 Acceptance conditions

The protection is satisfactory if adequate clearance is kept between the access probe and hazardous parts.

For the test of first characteristic numeral 1, the access probe 50 mm diameter shall not completely pass through the opening.

For the test of first characteristic numeral 2, the jointed test finger may penetrate to its 80 mm length, but the stop face (∅ 50 mm × 20 mm) shall not pass through the opening. Starting from the straight position, both joints of the test finger shall be successively bent through an angle of up to 90° with respect to the axis of the adjoining section of the finger and shall be placed in every possible position.

See annex A for further clarification.

Adequate clearance means:

12.3.1 For low-voltage equipment (rated voltages not exceeding 1 000 V a.c. and 1 500 V d.c.)

The access probe shall not touch hazardous live parts.

If adequate clearance is verified by a signal circuit between the probe and hazardous parts, the lamp shall not light.

NOTE The attention of relevant technical committees is drawn to the fact that in some types of electrical equipment the maximum voltage produced internally (r.m.s. value or d.c. value of the working voltage) is higher than the rated voltage of the equipment. This maximum voltage should be considered when the dielectric test voltage and the adequate clearance are determined.

12.3.2 For high-voltage equipment (rated voltages exceeding 1 000 V a.c. and 1 500 V d.c.)

When the access probe is placed in the most unfavourable position(s), the equipment shall be capable of withstanding the dielectric tests as specified in the relevant product standard applicable to the equipment.

Verification may be made either by dielectric test or by inspection of the specified clearance dimension in air which would ensure that the tests would be satisfactory under the most unfavourable electric field configuration (see IEC 60071-2).

In the case where an enclosure includes sections at different voltage levels the appropriate acceptance conditions for adequate clearance shall be applied for each section.

Documents
Document Sharing Hub
Full document details: IEC 60529-2013

NOTE The attention of relevant technical committees is drawn to the fact that in some types of electrical equipment the maximum voltage produced internally (r.m.s. value or d.c. value of the working voltage) is higher than the rated voltage of the equipment. This maximum voltage should be considered when the dielectric test voltage and the adequate clearance are determined.

12.3.3 For equipment with hazardous mechanical parts:

The access probe shall not touch hazardous mechanical parts.

If adequate clearance is verified by a signal circuit between the probe and hazardous parts, the lamp shall not light.

13 Tests for protection against solid foreign objects indicated by the first characteristic numeral

13.1 Test means

Test means and the main test conditions are given in table 7.

Table 7 – Test means for the tests for protection against solid foreign objects

First characteristic numeral	Test means (object probes and dust chamber)	Test force	Test conditions, see
0	No test required	–	–
1	Rigid sphere without handle or guard $50^{+0,05}_{0}$ mm diameter	50 N ± 10 %	13.2
2	Rigid sphere without handle or guard $12,5^{+0,2}_{0}$ mm diameter	30 N ± 10 %	13.2
3	Rigid steel rod $2,5^{+0,05}_{0}$ mm diameter with edges free from burrs	3 N ± 10 %	13.2
4	Rigid steel rod $1,0^{+0,05}_{0}$ mm diameter with edges free from burrs	1 N ± 10 %	13.2
5	Dust chamber figure 2, with or without underpressure	–	13.4 + 13.5
6	Dust chamber figure 2, with under-pressure	–	13.4 + 13.6

13.2 Test conditions for first characteristic numerals 1, 2, 3, 4

The object probe is pushed against any openings of the enclosure with the force specified in table 7.

13.3 Acceptance conditions for first characteristic numerals 1, 2, 3, 4

The protection is satisfactory if the full diameter of the probe specified in table 7 does not pass through any opening.

NOTE For first characteristic numerals 3 and 4 the probes specified in table 7 are intended to simulate foreign objects which may be spherical. Where an enclosure has an indirect or tortuous entry path and there is any doubt about ingress of a spherical object capable of motion, it may be necessary to examine drawings or to provide special access for the object probe to be applied with the specified force to the opening(s) where ingress has to be checked.

Documents
Document Sharing Hub
Full document details: IEC 60529-2013

13.4 Dust test for first characteristic numerals 5 and 6

The test is made using a dust chamber incorporating the basic principles shown in figure 2 whereby the powder circulation pump may be replaced by other means suitable to maintain the talcum powder in suspension in a closed test chamber. The talcum powder used shall be able to pass through a square-meshed sieve the nominal wire diameter of which is 50 μm and the nominal width of a gap between wires 75 μm. The amount of talcum powder to be used is 2 kg per cubic metre of the test chamber volume. It shall not have been used for more than 20 tests.

NOTE Health and safety regulations should be observed in selecting the type of talcum powder and its use.

Enclosures are of necessity in one of two categories:

Category 1: Enclosures where the normal working cycle of the equipment causes reductions in air pressure within the enclosure below that of the surrounding air, for example, due to thermal cycling effects.

Category 2: Enclosures where no pressure difference relative to the surrounding air is present.

Category 1 enclosures:

The enclosure under test is supported inside the test chamber and the pressure inside the enclosure is maintained below the surrounding atmospheric pressure by a vacuum pump. The suction connection shall be made to a hole specially provided for this test. If not otherwise specified in the relevant product standard, this hole shall be in the vicinity of the vulnerable parts.

If it is impracticable to make a special hole, the suction connection shall be made to the cable inlet hole. If there are other holes (for example, more cable inlet holes or drain-holes) these shall be treated as intended for normal use on site.

The object of the test is to draw into the enclosure, by means of depression, a volume of air 80 times the volume of the sample enclosure tested without exceeding the extraction rate of 60 volumes per hour. In no event shall the depression exceed 2 kPa (20 mbar) on the manometer shown in figure 2.

If an extraction rate of 40 to 60 volumes per hour is obtained the duration of the test is 2 h.

If, with a maximum depression of 2 kPa (20 mbar), the extraction rate is less than 40 volumes per hour, the test is continued until 80 volumes have been drawn through, or a period of 8 h has elapsed.

Category 2 enclosures:

The enclosure under test is supported in its normal operating position inside the test chamber, but is not connected to a vacuum pump. Any drain-hole normally open shall be left open for the duration of the test. The test shall be continued for a period of 8 h.

Category 1 and category 2 enclosures:

If it is impracticable to test the complete enclosure in the test chamber, one of the following procedures shall be applied:

– testing of individually enclosed sections of the enclosure;
– testing of representative parts of the enclosure, comprising components such as doors, ventilation openings, joints, shaft seals, etc., in position during test;
– testing of a smaller enclosure having the same full-scale design details.

Documents
Document Sharing Hub
Full document details: IEC 60529-2013

In the last two cases, the volume of air to be drawn through the enclosure under test shall be the same as for the whole enclosure in full scale.

13.5 Special conditions for first characteristic numeral 5

13.5.1 Test conditions for first characteristic numeral 5

The enclosure shall be deemed category 1 unless the relevant product standard for the equipment specifies that the enclosure is category 2.

13.5.2 Acceptance conditions for first characteristic numeral 5

The protection is satisfactory if, on inspection, talcum powder has not accumulated in a quantity or location such that, as with any other kind of dust, it could interfere with the correct operation of the equipment or impair safety. Except for special cases to be clearly specified in the relevant product standard, no dust shall deposit where it could lead to tracking along the creepage distances.

13.6 Special conditions for first characteristic numeral 6

13.6.1 Test conditions for first characteristic numeral 6

The enclosure shall be deemed category 1, whether reductions in pressure below the atmospheric pressure are present or not.

13.6.2 Acceptance conditions for first characteristic numeral 6

The protection is satisfactory if no deposit of dust is observable inside the enclosure at the end of the test.

14 Tests for protection against water indicated by the second characteristic numeral

14.1 Test means

The test means and the main test conditions are given in table 8.

Documents
Document Sharing Hub

Full document details: IEC 60529-2013

Table 8 – Test means and main test conditions for the tests for protection against water

Second characteristic numeral	Test means	Water flow rate	Duration of test	Test conditions, see
0	No test required	–	–	–
1	Drip box Figure 3 Enclosure on turntable	$1^{+0,5}_{0}$ mm/min	10 min	14.2.1
2	Drip box Figure 3 Enclosure in 4 fixed positions of 15° tilt	$3^{+0,5}_{0}$ mm/min	2,5 min for each position of tilt	14.2.2
3	Oscillating tube Figure 4 Spray ± 60° from vertical, distance max. 200 mm or Spray nozzle Figure 5 Spray ± 60° from vertical	0,07 l/min ± 5 % per hole, multiplied by number of holes 10 l/min ± 5 %	10 min 1 min/m² at least 5 min	14.2.3 a) 14.2.3 b)
4	As for numeral 3 Spray ± 180° from vertical	As for numeral 3		14.2.4
5	Water jet hose nozzle Figure 6 Nozzle 6,3 mm diameter, distance 2,5 m to 3 m	12,5 l/min ± 5 %	1 min/m² at least 3 min	14.2.5
6	Water jet hose nozzle Figure 6 Nozzle 12,5 mm diameter, distance 2,5 m to 3 m	100 l/min ± 5 %	1 min/m² at least 3 min	14.2.6
7	Immersion tank Water-level on enclosure: 0,15 m above top 1 m above bottom	–	30 min	14.2.7
8	Immersion tank Water-level: by agreement	–	by agreement	14.2.8
9	Fan jet nozzle Figure 7 Test of small enclosure on turntable Figure 12 Turntable speed (5 ± 1) r/min Spray at 0°, 30°, 60°, 90° Or Test of large enclosures as per intended use Spray from all practical directions Distance (175 ± 25) mm	(15 ± 1) l/min	30 s per position 1 min/m2 at least 3 min	14.2.9 a) 14.2.9 b)

14.2 Test conditions

Test means and main test conditions are given in table 8.

Details concerning compliance of degrees of protection – in particular for second characteristic numerals 5/6/9 (water jets) and numerals 7/8 (immersion) – are given in Clause 6.

The tests are conducted with fresh water.

Documents
Document Sharing Hub

Full document details: IEC 60529-2013

During the tests for IPXI to IPX6 the water temperature should not differ by more than 5 K from the temperature of the specimen under test. If the water temperature is more than 5 K below the temperature of the specimen a pressure balance shall be provided for the enclosure. For IPX7 and IPX9 details of the water temperature are given in 14.2.7 and 14.2.9 respectively.

During the test, the moisture contained inside the enclosure may partly condense. The dew which may thus deposit shall not be mistaken for an ingress of water.

For the purpose of the tests, the surface area of the enclosure is calculated with a tolerance of 10 %.

Adequate safety precautions should be taken when testing the equipment in the energized condition.

14.2.1 Test for second characteristic numeral 1 with the drip box

The test is made with a device which produces a uniform flow of water drops over the whole area of the enclosure.

An example of such a device is shown in figure 3 a).

The turntable on which the enclosure is placed has a rotation speed of 1 r/min and the eccentricity (distance between turntable axis and specimen axis) is approximately 100 mm.

The enclosure under test is placed in its normal operating position under the drip box, the base of which is larger than that of the enclosure. Except for enclosures designed for wall or ceiling mounting, the support for the enclosure under test should be smaller than the base of the enclosure.

An enclosure normally fixed to a wall or ceiling is fixed in its normal position of use to a wooden board having dimensions which are equal to those of that surface of the enclosure which is in contact with the wall or ceiling when the enclosure is mounted as in normal use.

The duration of test is 10 min.

NOTE When the base of the drip box is smaller than that of the enclosure under test, the latter may be divided into several sections, the area of each section being large enough to be covered by the dripping water. The test is continued until the whole area of the enclosure has been sprinkled for the specified time.

14.2.2 Test for second characteristic numeral 2 with the drip box

The dripping device is the same as specified in 14.2.1 adjusted to provide the water flow rate specified in table 8.

The table on which the enclosure is placed does not turn as in the case of the test for the second characteristic numeral 1.

The enclosure is tested for 2,5 min in each of four fixed positions of tilt.

These positions are 15° on either side of the vertical in two mutually perpendicular planes (see figure 3b)).

The total duration of the test is 10 min.

Documents
Document Sharing Hub
Full document details: IEC 60529-2013

14.2.3 Test for second characteristic numeral 3 with oscillating tube or spray nozzle

The test is made using one of the two test devices described in figure 4 and in figure 5 in accordance with the relevant product standard.

a) Conditions when using the test device as in figure 4 (oscillating tube):

The total flow rate is adjusted as specified in table 9 and is measured with a flow meter.

The oscillating tube is provided with spray holes over an arc of 60° either side of the centre point. The support is not perforated.

The enclosure to be tested is placed at the centre point of the semicircle. The tube is caused to oscillate through an angle of 120°, 60° on either side of the vertical, the time for one complete oscillation (2 × 120°) being about 4 s and the test duration being 5 min.

The enclosure is then turned through an horizontal angle of 90° and the test is continued for a further 5 min.

The maximum acceptable radius of the oscillating tube is 1 600 mm.

If for certain types of apparatus it is not possible to wet all parts of the enclosure under test, the support of the enclosure may be moved up or down. The hand-held test device as in figure 5 (spray nozzle) should be used as a preference in such cases.

b) Conditions when using the test device as in figure 5 (spray nozzle):

The counterbalanced shield is in place for this test.

The water pressure is adjusted to give the specified delivery rate. The pressure to achieve this delivery rate will be in the range of 50 kPa to 150 kPa. It should be kept constant during the test.

The test duration is 1 min/m^2 of the calculated surface area of the enclosure (excluding any mounting surface), with a minimum duration of 5 min.

14.2.4 Test for second characteristic numeral 4 with oscillating tube or spray nozzle

The test is made using one of the two test devices described in figure 4 and in figure 5 in accordance with the relevant product standard.

a) Conditions when using the test device as in figure 4 (oscillating tube):

The oscillating tube has spray holes over the whole 180” of the semicircle. The total flow rate is adjusted as specified in table 9 and is measured with a flow meter.

The tube is caused to oscillate through an angle of almost 360°, 180° on either side of the vertical, the time for one complete oscillation (2 × 360°) being about 12 s.

The duration of the test is 10 min.

If not specified otherwise in the relevant product standard, the support for the enclosure under test is perforated so as to avoid acting as a baffle and the enclosure is sprayed from every direction by oscillating the tube to the limit of its travel in each direction.

b) Conditions when using the test device as in figure 5 (spray nozzle):

The counterbalanced shield is removed from the spray nozzle and the enclosure is sprayed from all practicable directions.

The rate of water flow and the spraying time per unit area are as specified in 14.2.3.

Documents
Document Sharing Hub
Full document details: IEC 60529-2013

Table 9 – Total water flow rate q_V under IPX3 and IPX4 test conditions – Mean flow rate per hole q_{Vl} = 0,07 l/min

Tube radius *R* mm	Degree IPX3		Degree IPX4	
	Number of open holes *N*[1)]	Total water flow q_v l/min	Number of open holes *N*[1)]	Total water flow q_v l/min
200	8	0,56	12	0,84
400	16	1,1	25	1,8
600	25	1,8	37	2,6
800	33	2,3	50	3,5
1 000	41	2,9	62	4,3
1 200	50	3,5	75	5,3
1 400	58	4,1	87	6,1
1 600	67	4,7	100	7,0

1) Depending on the actual arrangement of the hole centres at the specified distance, the number of open holes *N* may be increased by 1.

14.2.5 Test for second characteristic numeral 5 with the 6,3 mm nozzle

The test is made by spraying the enclosure from all practicable directions with a stream of water from a standard test nozzle as shown in figure 6.

The conditions to be observed are as follows:

– internal diameter of the nozzle: 6,3 mm;
– delivery rate: 12,5 l/min ± 5 %;
– water pressure: to be adjusted to achieve the specified delivery rate;
– core of the substantial stream: circle of approximately 40 mm diameter at 2,5 m distance from nozzle;
– test duration per square metre of enclosure surface area likely to be sprayed: 1 min;
– minimum test duration: 3 min;
– distance from nozzle to enclosure surface: between 2,5 m and 3 m.

14.2.6 Test for second characteristic numeral 6 with the 12,5 mm nozzle

The test is made by spraying the enclosure from all practicable directions with a stream of water from a standard test nozzle as shown in figure 6.

The conditions to be observed are as follows:

– internal diameter of the nozzle: 12,5 mm;
– delivery rate: 100 l/min ± 5 %;
– water pressure: to be adjusted to achieve the specified delivery rate;
– core of the substantial stream: circle of approximately 120 mm diameter at 2,5 m distance from nozzle;
– test duration per square metre of enclosure surface area likely to be sprayed: 1 min;
– minimum test duration: 3 min;
– distance from nozzle to enclosure surface: between 2,5 m and 3 m.

14.2.7 Test for second characteristic numeral 7: temporary immersion between 0,15 m and 1 m

The test is made by completely immersing the enclosure in water in its service position as specified by the manufacturer so that the following conditions are satisfied:

Documents
Document Sharing Hub
Full document details: IEC 60529-2013

a) the lowest point of enclosures with a height less than 850 mm is located 1 000 mm below the surface of the water;

b) the highest point of enclosures with a height equal to or greater than 850 mm is located 150 mm below the surface of the water;

c) the duration of the test is 30 min;

d) the water temperature does not differ from that of the equipment by more than 5 K. However, a modified requirement may be specified in the relevant product standard if the tests are to be made when the equipment is energized and/or its parts in motion.

14.2.8 Test for second characteristic numeral 8: continuous immersion subject to agreement

Unless there is a relevant product standard, the test conditions are subject to agreement between manufacturer and user, but they shall be more severe than those prescribed in 14.2.7 and they shall take account of the condition that the enclosure will be continuously immersed in actual use.

14.2.9 Test for second characteristic numeral 9 by high pressure and temperature water jetting

The test is made by spraying the enclosure with a stream of water from a standard test nozzle as shown in Figures 7, 8 and 9.

The set-up for measuring the impact force of the water jet is given in Figure 10.

The distribution force shall be verified at upper and lower limits of distance tolerance range (see Figure 11).

During the test a) or b) of the enclosure, the water temperature shall be (80 ± 5) °C.

a) For small enclosures (largest dimension less than 250 mm), the enclosure shall be mounted on the test device shown in Figure 12.

   – turntable speed: 5 r/min ± 1 r/min
   – spray positions: 0°, 30°, 60°, 90°

   The test duration is 30 s per position.

b) For large enclosures (largest dimension greater than or equal to 250 mm), the enclosure shall be mounted as per intended use. The entire exposed surface area of the enclosure shall be subjected to the spray at some point during the test procedure.

   – spray positions: the enclosure shall be sprayed from all practical directions covering the entire surface area and the spray shall be, as far as possible, perpendicular to the sprayed surface.
   – distance between nozzle and sample under test shall be 175 ± 25 mm.

The test duration is 1 min/m^2 of the calculated surface area of the enclosure (excluding any mounting surface), with a minimum duration of 3 min.

14.3 Acceptance conditions

After testing in accordance with the appropriate requirements of 14.2.1 to 14.2.~~8~~9, the enclosure shall be inspected for ingress of water.

It is the responsibility of the relevant technical committee to specify the amount of water which may be allowed to enter the enclosure and the details of a dielectric strength test, if any.

In general, if any water has entered, it shall not:

Documents
Document Sharing Hub
Full document details: IEC 60529-2013

– be sufficient to interfere with the correct operation of the equipment or impair safety;
– deposit on insulation parts where it could lead to tracking along the creepage distances;
– reach live parts or windings not designed to operate when wet;
– accumulate near the cable end or enter the cable if any.

If the enclosure is provided with drain-holes, it should be proved by inspection that any water which enters does not accumulate and that it drains away without doing any harm to the equipment.

For enclosures without drain-holes, the relevant product standard shall specify the acceptance conditions if water can accumulate to reach live parts.

15 Tests for protection against access to hazardous parts indicated by the additional letter

15.1 Access probes

Access probes to verify the protection of persons against access to hazardous parts are given in table 6.

15.2 Test conditions

The access probe is pushed against any openings of the enclosure with the force specified in table 6. If it partly or fully penetrates, it is placed in every possible position, but in no case shall the stop face fully penetrate through the opening.

Internal barriers are considered part of the enclosure as defined in 3.1.

For tests on low-voltage equipment, a low-voltage supply (of not less than 40 V and not more than 50 V) in series with a suitable lamp should be connected between the probe and the hazardous parts inside the enclosure. Hazardous live parts covered only with varnish or paint, or protected by oxidation or by a similar process, are covered by a metal foil electrically connected to those parts which are normally live in operation.

The signal-circuit method should also be applied to the hazardous moving parts of high-voltage equipment.

Internal moving parts may be operated slowly, where this is possible.

15.3 Acceptance conditions

The protection is satisfactory if adequate clearance is kept between the access probe and hazardous parts.

In the case of the test for the additional letter B, the jointed test finger may penetrate to its 80 mm length, but the stop face (∅ 50 mm × 20 mm) shall not pass through the opening. Starting from the straight position, both joints of the test finger shall be successively bent through an angle of up to 90° with respect to the axis of the adjoining section of the finger and shall be placed in every possible position.

In case of the tests for the additional letters C and D, the access probe may penetrate to its full length, but the stop face shall not fully penetrate through the opening. See annex A for further clarification.

Conditions for verification of adequate clearance are identical with those given in 12.3.1, 12.3.2 and 12.3.3.

Documents
Document Sharing Hub
Full document details: IEC 60529-2013

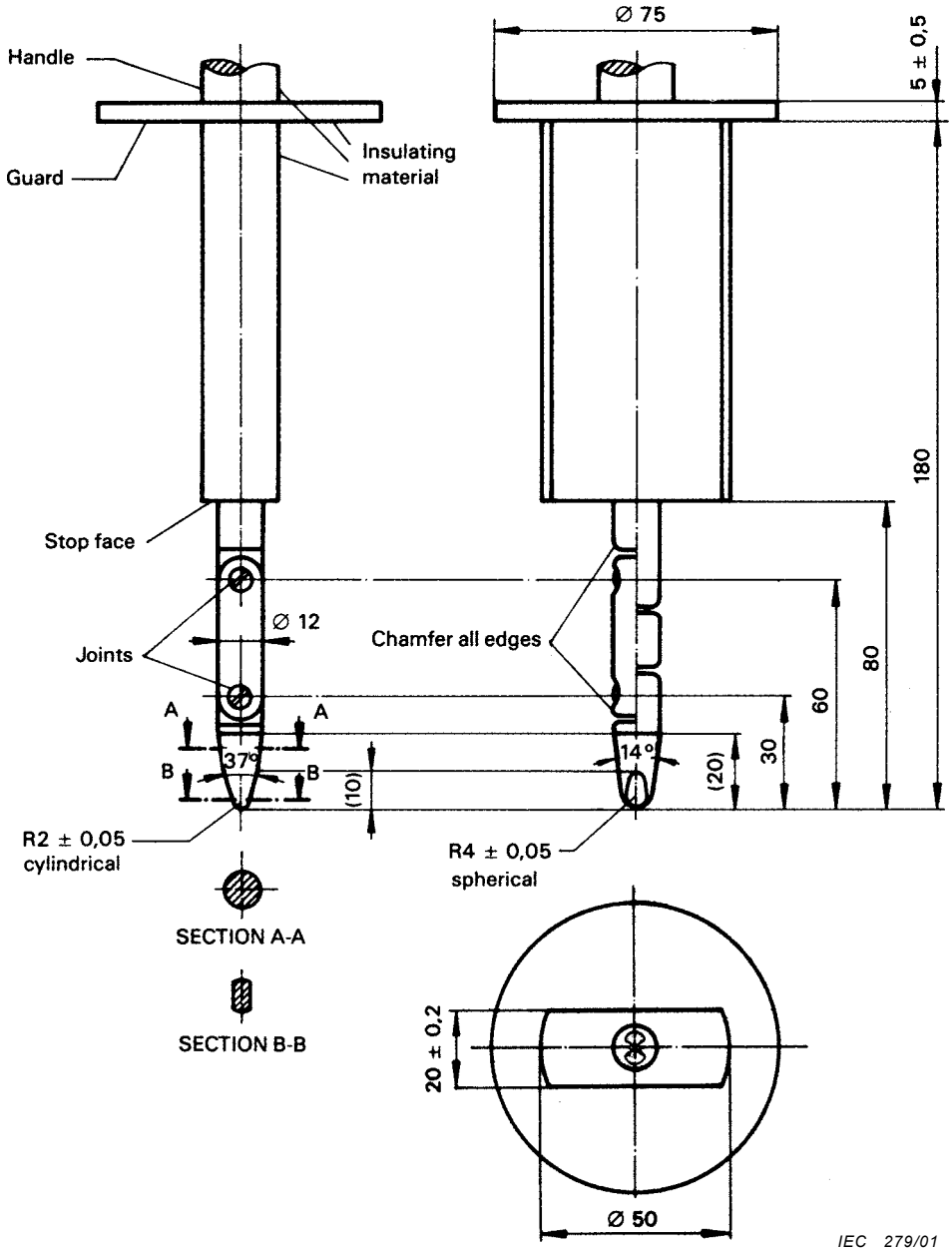

Material: metal, except where otherwise specified

Linear dimensions in millimetres

Tolerances on dimensions without specific tolerance:

on angles: 0/–10'

on linear dimensions:
up to 25 mm: 0/–0,05
over 25 mm: ±0,2

Both joints shall permit movement in the same plane and the same direction through an angle of 90° with a 0 to +10° tolerance.

Figure 1 – Jointed test finger

Documents
Document Sharing Hub
Full document details: IEC 60529-2013

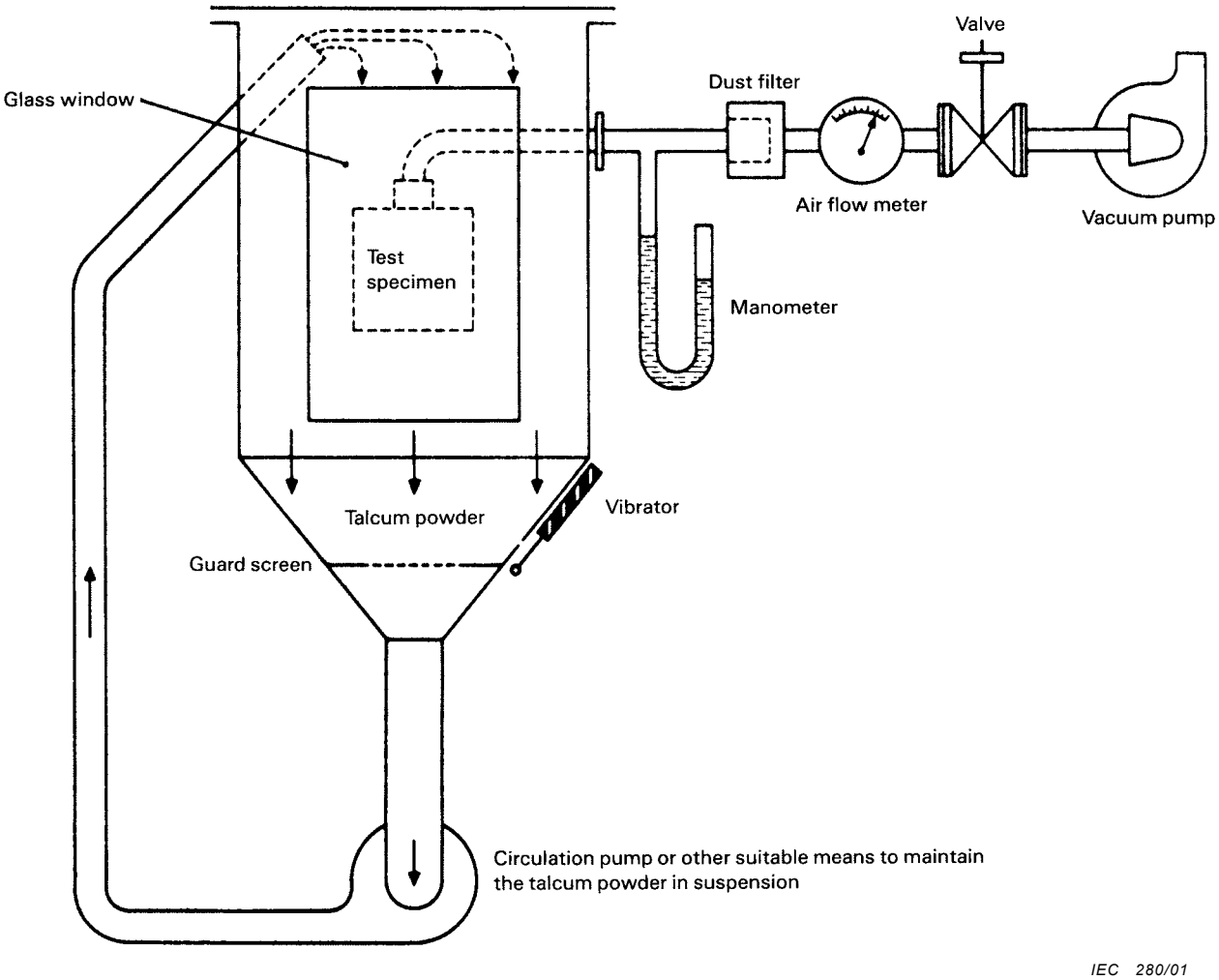

NOTE See IEC 60068-2-68, figure 2 valid for La2 only.

Figure 2 – Test device to verify protection against dust (dust chamber)

Documents
Document Sharing Hub
Full document details: IEC 60529-2013

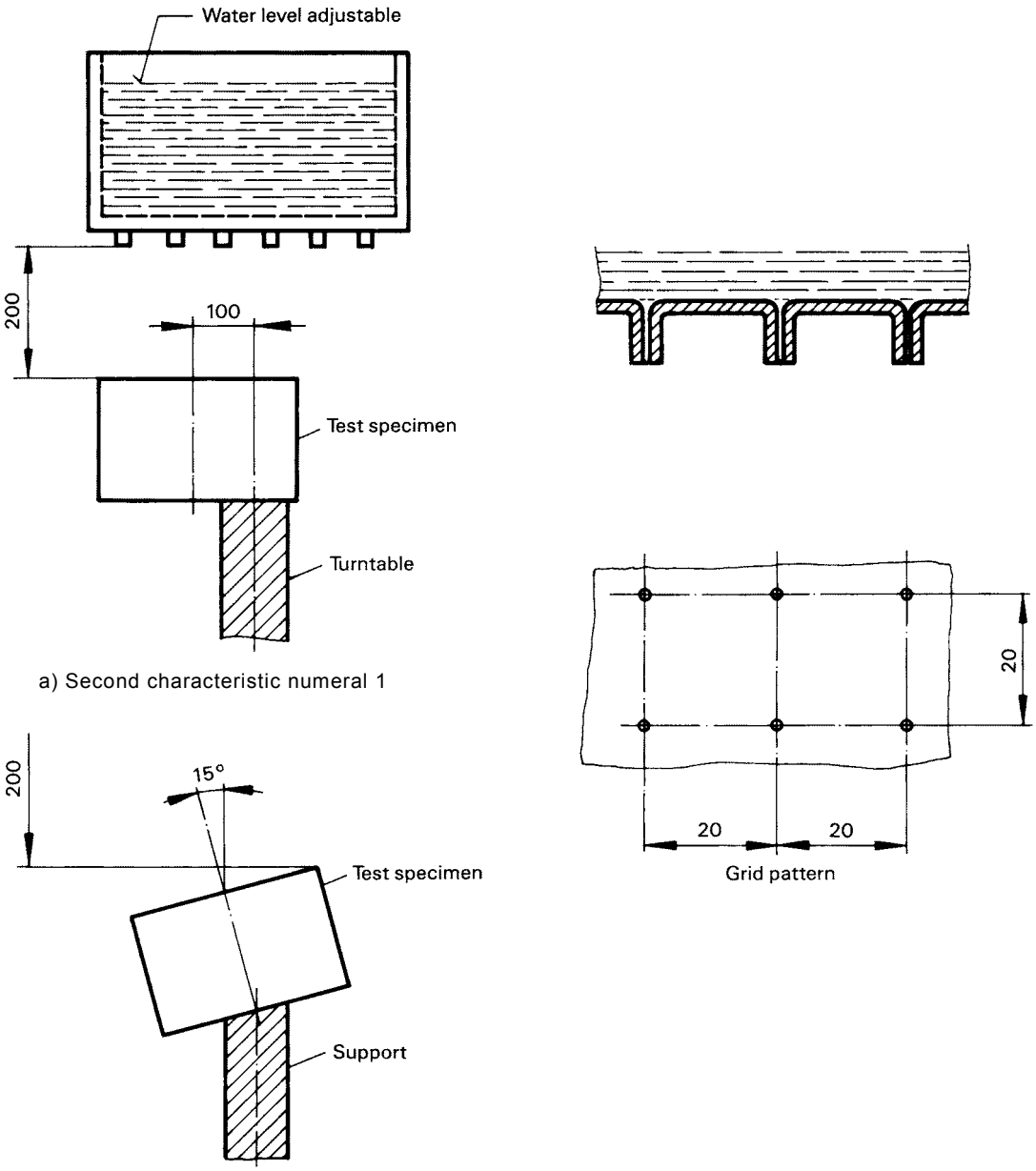

Dimensions in millimetres

Figure 3 – Test device to verify protection against vertically falling water drops (drip box)

Documents
Document Sharing Hub
Full document details: IEC 60529-2013

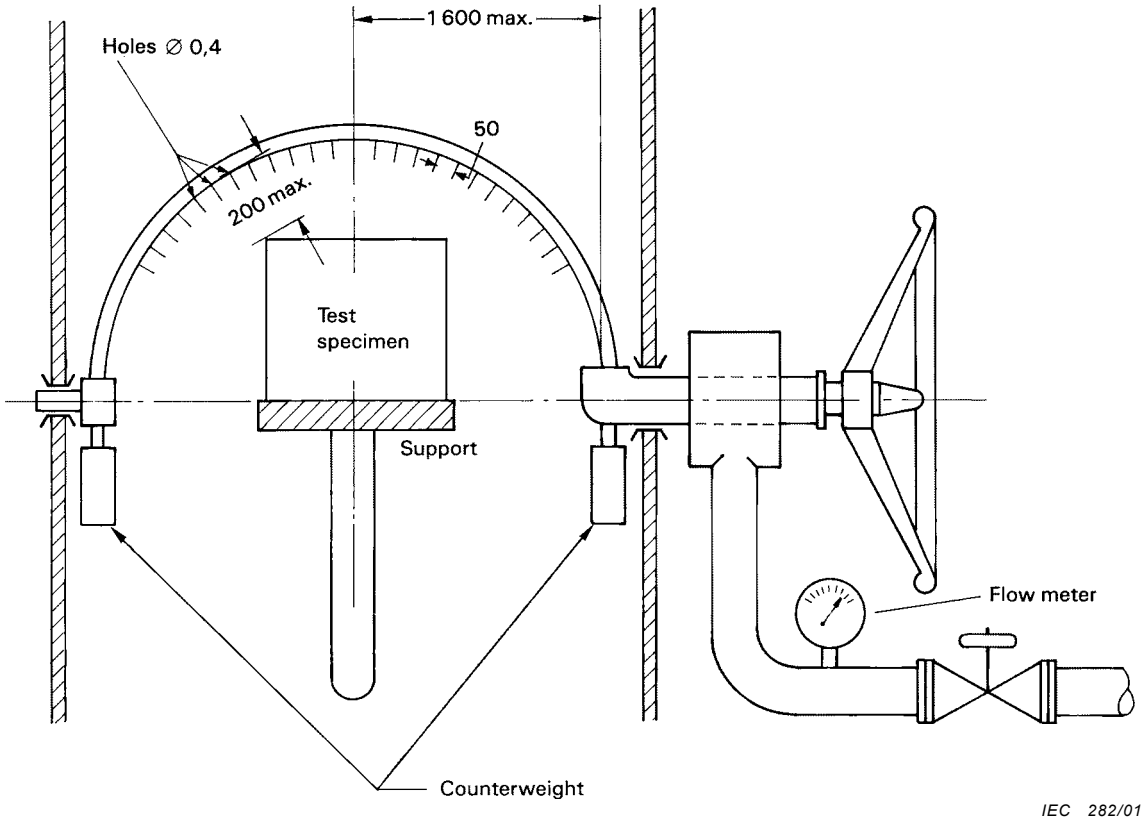

Dimensions in millimetres

NOTE The range of holes is shown as for second characteristic numeral 3 (see 14.2.3 a)).

Figure 4 – Test device to verify protection against spraying and splashing water; second characteristic numerals 3 and 4 (oscillating tube)

Documents
Document Sharing Hub
Full document details: IEC 60529-2013

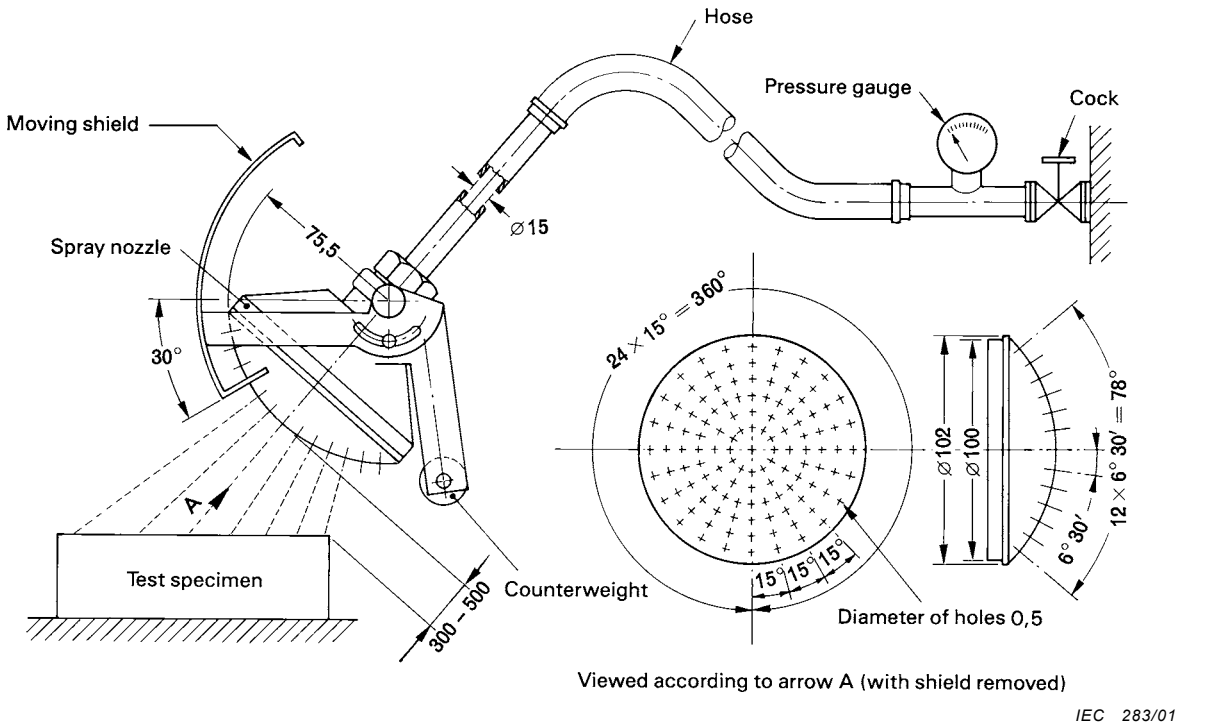

Dimensions in millimetres

121 holes of ⌀ 0,5;
1 hole at the centre
2 inner circles of 12 holes at 30° pitch
4 outer circles of 24 holes at 15° pitch
Moving shield – Aluminium
Spray nozzle – Brass

Figure 5 – Hand-held device to verify protection against spraying and splashing water; second characteristic numerals 3 and 4 (spray nozzle)

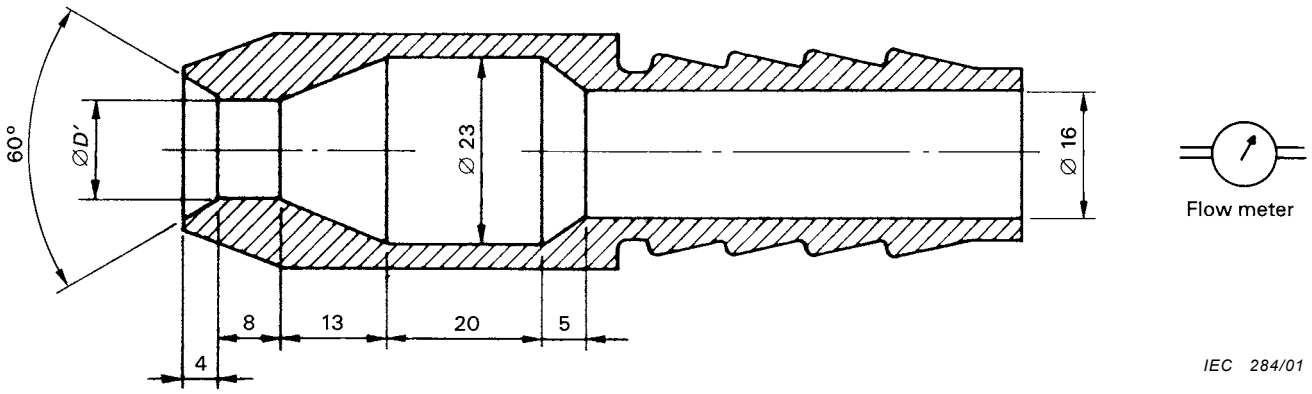

Dimensions in millimetres

D′ = 6,3 for the test of 14.2.5 (second characteristic numeral 5)
D′ = 12,5 for the test of 14.2.6 (second characteristic numeral 6)

Figure 6 – Test device to verify protection against water jets (hose nozzle)

Documents
Document Sharing Hub
Full document details: IEC 60529-2013

Dimensions in millimetres

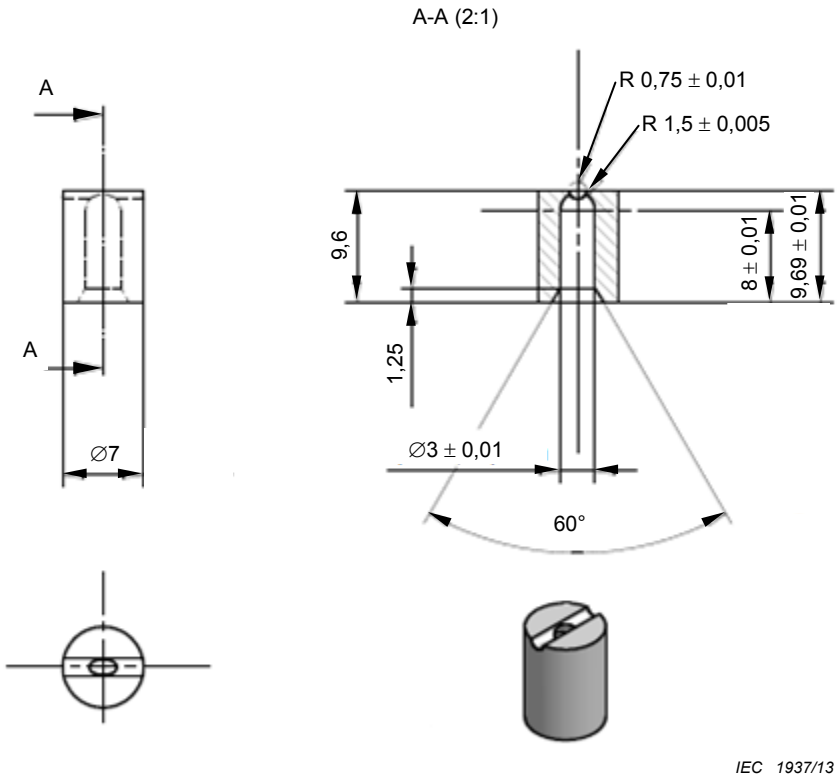

NOTE The dimension 9,69 ±0,01 refers to the centre of the radius R0,75 ±0,01.

Figure 7 – Fan jet nozzle dimensions

Dimensions in millimetres

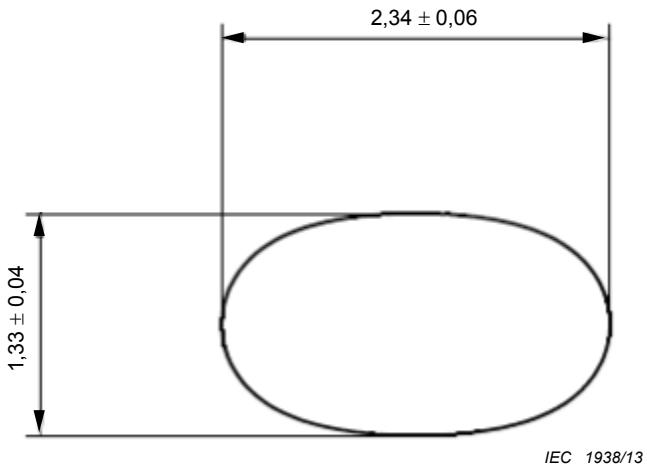

NOTE A magnification of 100 times the edge of the nozzle should show a regular profile (see for example Figure 9).

Figure 8 – Fan jet nozzle resulting dimensions of spraying hole for checking purpose

AVA Documents
Document Sharing Hub
Full document details: IEC 60529-2013

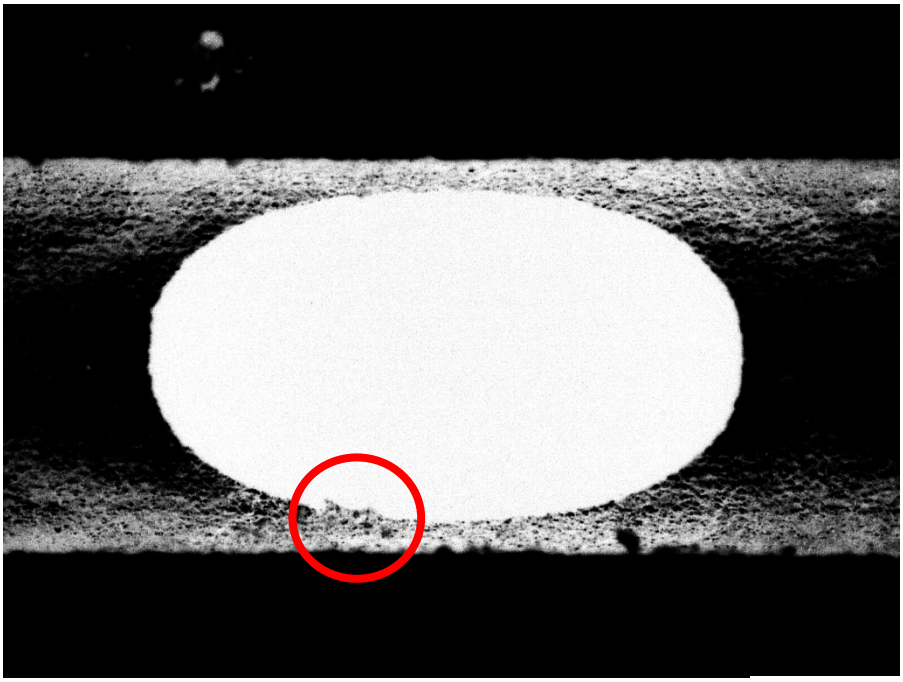

Bad surface finish

IEC 1939/13

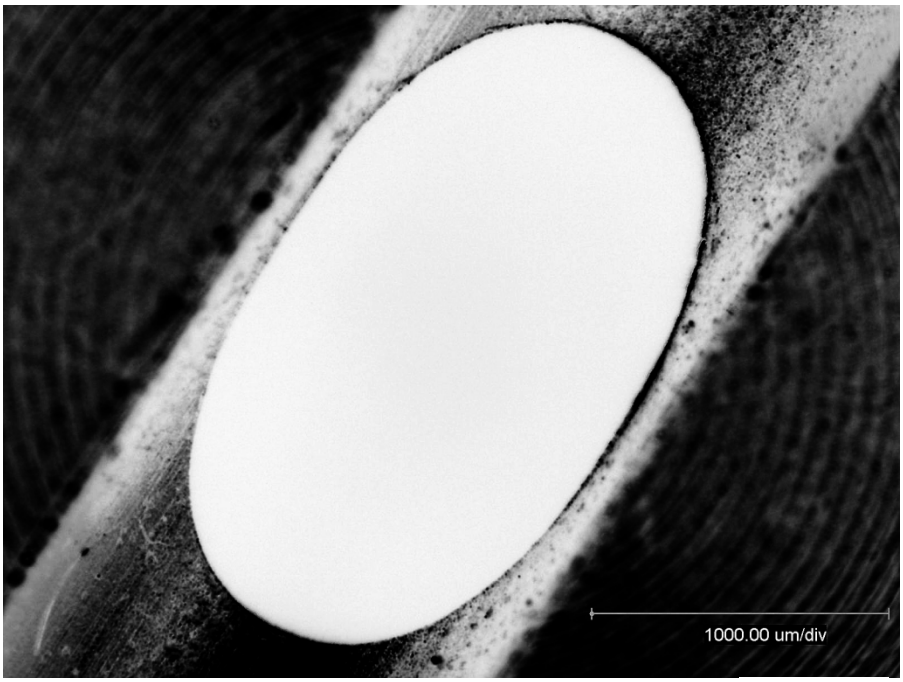

Good surface finish

IEC 1940/13

Figure 9 – Example of different quality achievements of the surface finish of the fan jet nozzle

Documents
Document Sharing Hub

Full document details: IEC 60529-2013

Dimensions in millimetres

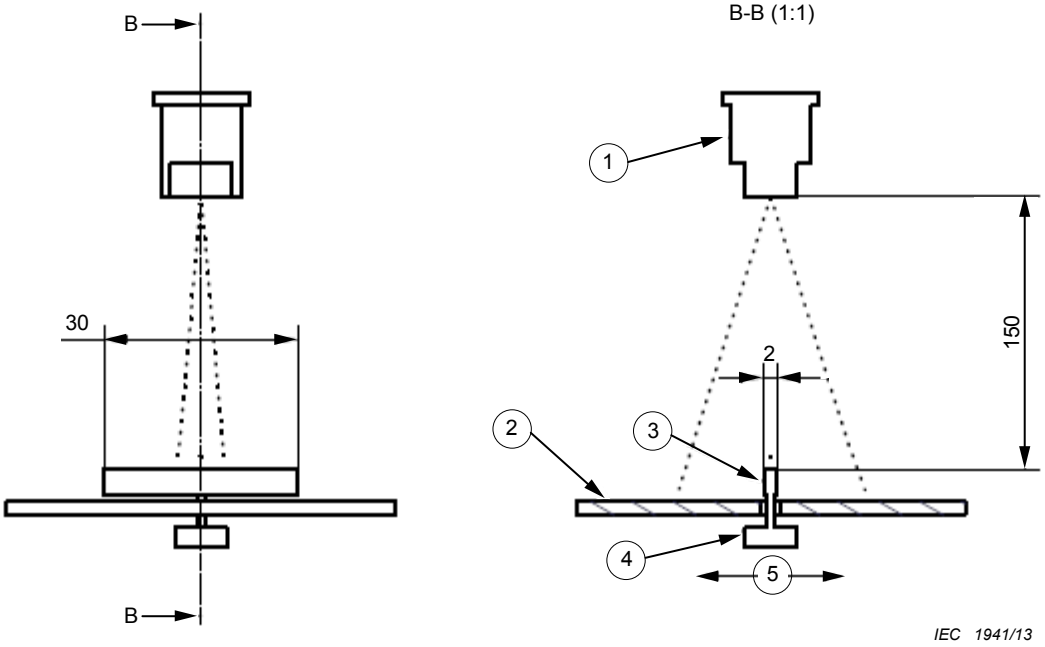

Key

1 fan jet nozzle:
adjustment of the flow – rate between (15 ± 1) l/min to reach a distribution impact force of 0,9 – 1,2 N. Water temperature during verification (20 ± 5) °C.

2 cover plate

3 impact plate 2 mm × 30 mm

4 force sensor

5 distribution forces directions (see also Figure 11)

Figure 10 – Set-up for measuring the impact force of the water jet for determining the protection against high pressure and temperature water jet, degree of protection against ingress of water IP X9

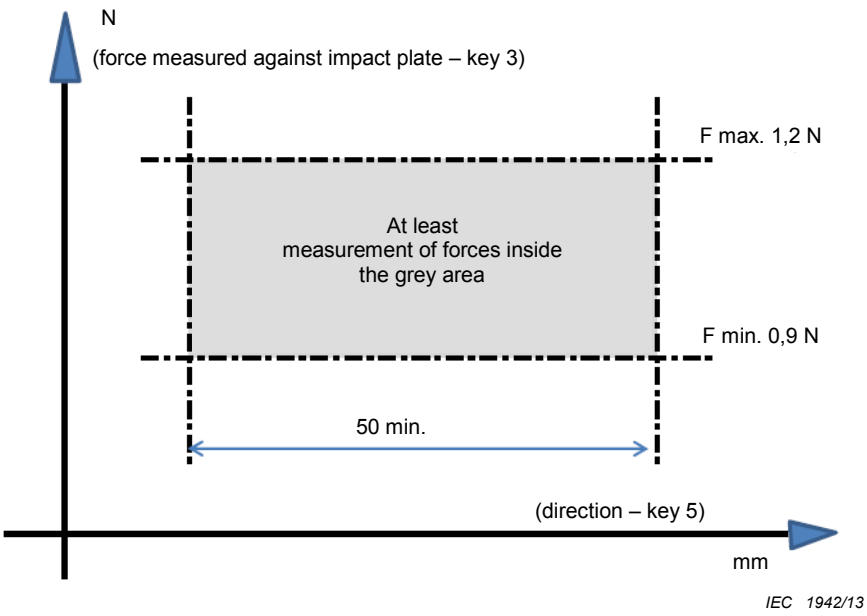

Figure 11 – Impact force distribution

Documents
Document Sharing Hub
Full document details: IEC 60529-2013

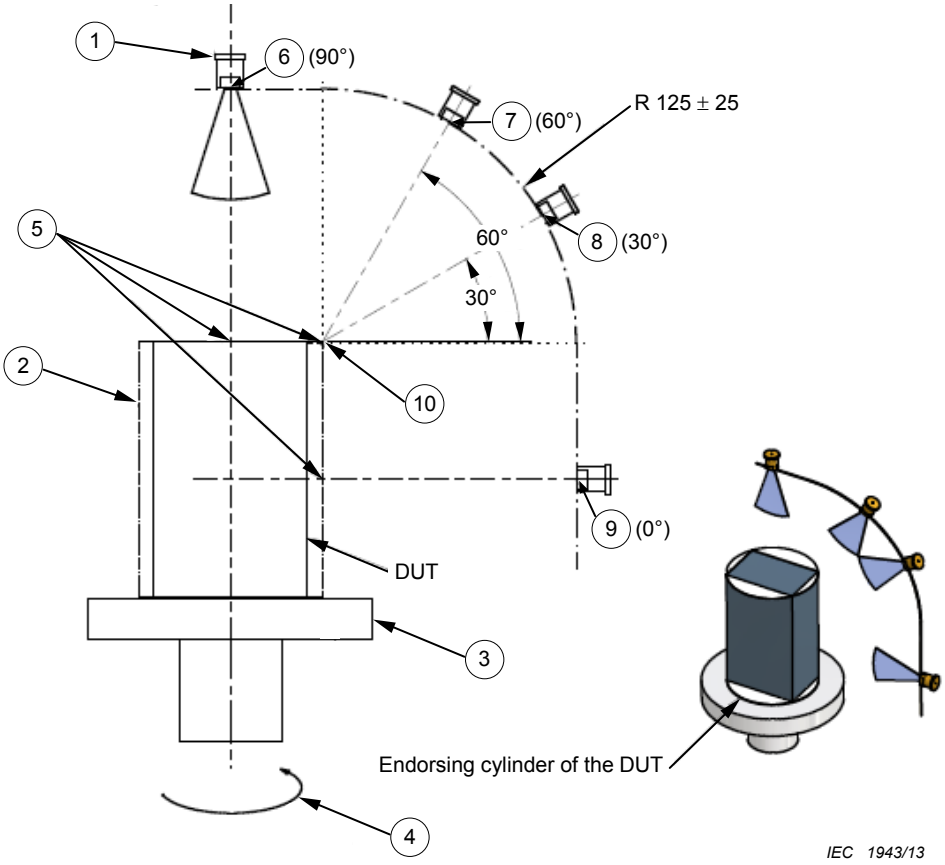

Key

1	fan jet nozzle	6	position 1 of the nozzle (90°)
2	endorsing cylinder for DUT	7	position 2 of the nozzle (60°)
3	holder (rotating table)	8	position 3 of the nozzle (30°)
4	swivel axis (axis of rotation)	9	position 4 of the nozzle (0°)
5	reference point for 0°, for 30° and 60°, then for 90° versus the endorsing cylinder for DUT	10	centre point of circle R125 mm to locate nozzles

Figure 12 – Test set-up for determining the protection against high-pressure and temperature water jet; degree of protection against ingress of water IP X9 for small enclosures

Documents
Document Sharing Hub
Full document details: IEC 60529-2013

Annex A
(informative)

Examples of IP coding for the verification of protection of low-voltage equipment against access to hazardous parts

Ref. No.	Situation	Two numerals	Additional letter	Two numerals + additional letter
1	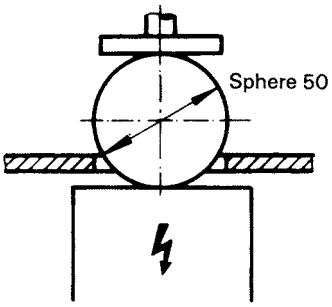 IEC 285/01	0X	–	0X
2	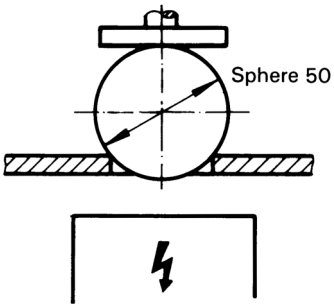 IEC 286/01	1X	A	1X
3	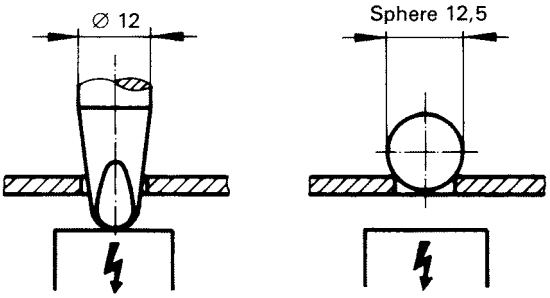 IEC 287/01	1X	A	1X

Documents
Document Sharing Hub
Full document details: IEC 60529-2013

Ref. No.	Situation	Two numerals	Additional letter	Two numerals + additional letter
4	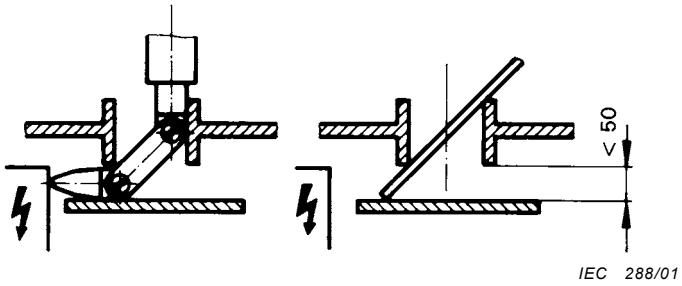	1X	A	1X
5	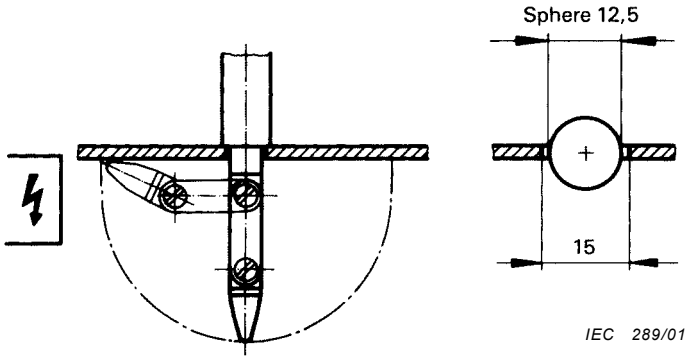	1X	B	1XB
6	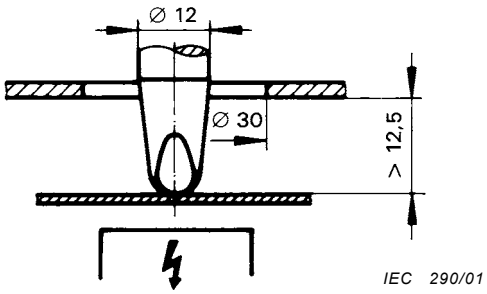	1X	B	1XB

Documents
Document Sharing Hub

Full document details: IEC 60529-2013

Ref. No.	Situation	Two numerals	Additional letter	Two numerals + additional letter
7	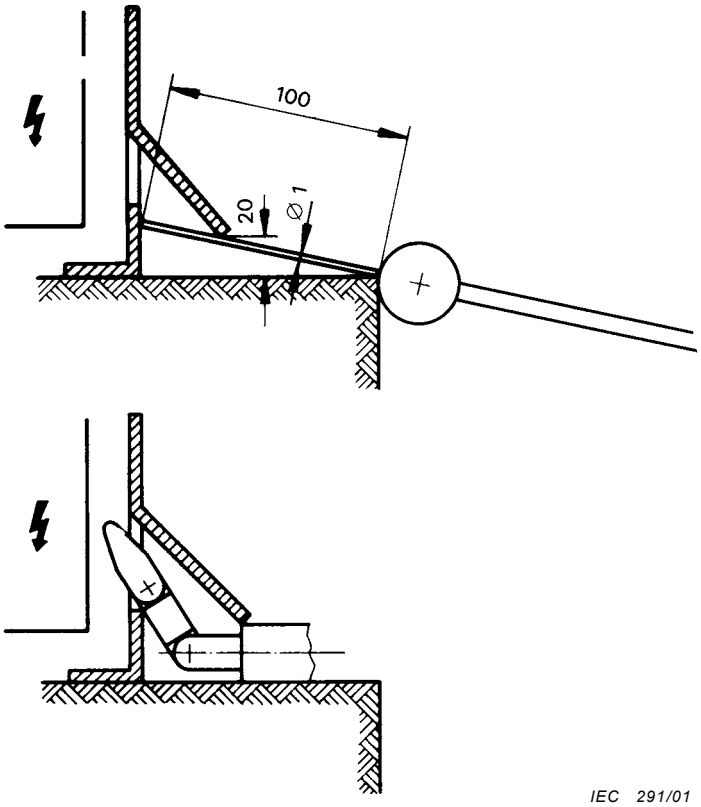	1X	D	1XD
8	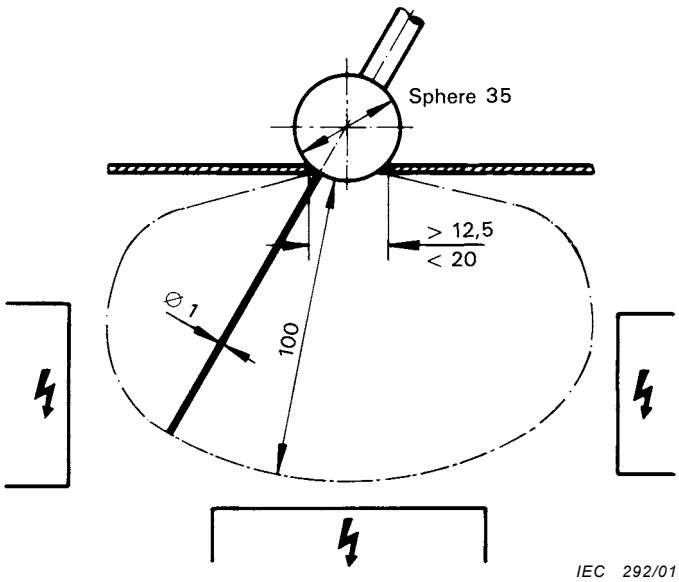	1X	D	1XD

Documents
Document Sharing Hub
Full document details: IEC 60529-2013

Ref. No.	Situation	Two numerals	Additional letter	Two numerals + additional letter
9	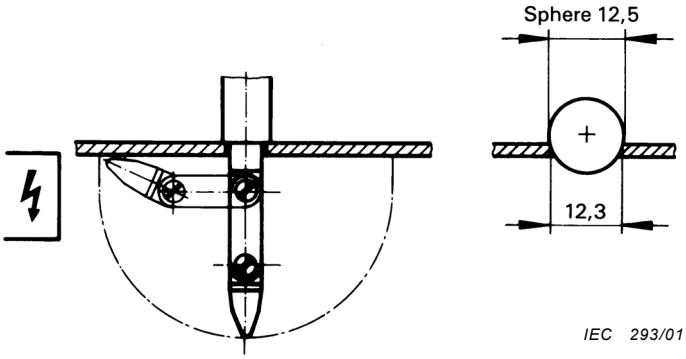	2X	B	2X
10	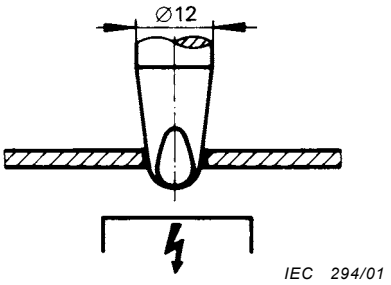	2X	B	2X
11	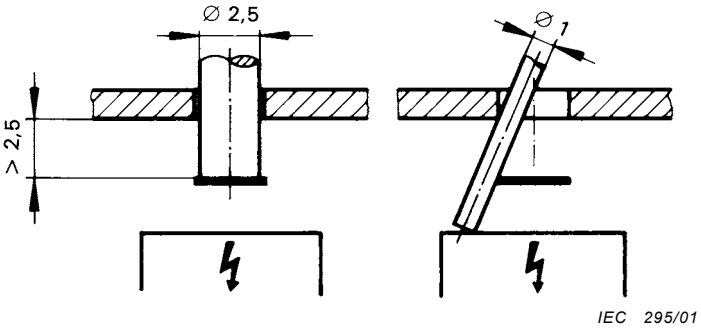	2X	C	2XC

Documents
Document Sharing Hub

Full document details: IEC 60529-2013