IEC 60534-3-1

Edition 2.0 2019-02

INTERNATIONAL STANDARD

NORME INTERNATIONALE

Industrial-process control valves – Part 3-1: Dimensions – Face-to-face dimensions for flanged, two-way, globe-type, straight pattern and centre-to-face dimensions for flanged, two-way, globe-type, angle pattern control valves

Vannes de régulation des processus industriels – Partie 3-1: Dimensions – Dimensions face à face des vannes de régulation à brides, à deux voies, à soupape, à tête droite et dimensions face à axe des vannes de régulation à brides, à deux voies, à soupape, à corps d'équerre

IEC 60534-3-1:2019-02(en-fr)

Documents
Document Sharing Hub

Full document details: IEC 60534-3-1-2019

THIS PUBLICATION IS COPYRIGHT PROTECTED
Copyright © 2019 IEC, Geneva, Switzerland

All rights reserved. Unless otherwise specified, no part of this publication may be reproduced or utilized in any form or by any means, electronic or mechanical, including photocopying and microfilm, without permission in writing from either IEC or IEC's member National Committee in the country of the requester. If you have any questions about IEC copyright or have an enquiry about obtaining additional rights to this publication, please contact the address below or your local IEC member National Committee for further information.

Droits de reproduction réservés. Sauf indication contraire, aucune partie de cette publication ne peut être reproduite ni utilisée sous quelque forme que ce soit et par aucun procédé, électronique ou mécanique, y compris la photocopie et les microfilms, sans l'accord écrit de l'IEC ou du Comité national de l'IEC du pays du demandeur. Si vous avez des questions sur le copyright de l'IEC ou si vous désirez obtenir des droits supplémentaires sur cette publication, utilisez les coordonnées ci-après ou contactez le Comité national de l'IEC de votre pays de résidence.

IEC Central Office
3, rue de Varembé
CH-1211 Geneva 20
Switzerland

Tel.: +41 22 919 02 11
info@iec.ch
www.iec.ch

About the IEC
The International Electrotechnical Commission (IEC) is the leading global organization that prepares and publishes International Standards for all electrical, electronic and related technologies.

About IEC publications
The technical content of IEC publications is kept under constant review by the IEC. Please make sure that you have the latest edition, a corrigendum or an amendment might have been published.

IEC publications search - webstore.iec.ch/advsearchform
The advanced search enables to find IEC publications by a variety of criteria (reference number, text, technical committee,…). It also gives information on projects, replaced and withdrawn publications.

IEC Just Published - webstore.iec.ch/justpublished
Stay up to date on all new IEC publications. Just Published details all new publications released. Available online and once a month by email.

IEC Customer Service Centre - webstore.iec.ch/csc
If you wish to give us your feedback on this publication or need further assistance, please contact the Customer Service Centre: sales@iec.ch.

Electropedia - www.electropedia.org
The world's leading online dictionary on electrotechnology, containing more than 22 000 terminological entries in English and French, with equivalent terms in 16 additional languages. Also known as the International Electrotechnical Vocabulary (IEV) online.

IEC Glossary - std.iec.ch/glossary
67 000 electrotechnical terminology entries in English and French extracted from the Terms and Definitions clause of IEC publications issued since 2002. Some entries have been collected from earlier publications of IEC TC 37, 77, 86 and CISPR.

A propos de l'IEC
La Commission Electrotechnique Internationale (IEC) est la première organisation mondiale qui élabore et publie des Normes internationales pour tout ce qui a trait à l'électricité, à l'électronique et aux technologies apparentées.

A propos des publications IEC
Le contenu technique des publications IEC est constamment revu. Veuillez vous assurer que vous possédez l'édition la plus récente, un corrigendum ou amendement peut avoir été publié.

Recherche de publications IEC - webstore.iec.ch/advsearchform
La recherche avancée permet de trouver des publications IEC en utilisant différents critères (numéro de référence, texte, comité d'études,…). Elle donne aussi des informations sur les projets et les publications remplacées ou retirées.

IEC Just Published - webstore.iec.ch/justpublished
Restez informé sur les nouvelles publications IEC. Just Published détaille les nouvelles publications parues. Disponible en ligne et une fois par mois par email.

Service Clients - webstore.iec.ch/csc
Si vous désirez nous donner des commentaires sur cette publication ou si vous avez des questions contactez-nous: sales@iec.ch.

Electropedia - www.electropedia.org
Le premier dictionnaire d'électrotechnologie en ligne au monde, avec plus de 22 000 articles terminologiques en anglais et en français, ainsi que les termes équivalents dans 16 langues additionnelles. Egalement appelé Vocabulaire Electrotechnique International (IEV) en ligne.

Glossaire IEC - std.iec.ch/glossary
67 000 entrées terminologiques électrotechniques, en anglais et en français, extraites des articles Termes et Définitions des publications IEC parues depuis 2002. Plus certaines entrées antérieures extraites des publications des CE 37, 77, 86 et CISPR de l'IEC.

Documents
Document Sharing Hub

Full document details: IEC 60534-3-1-2019

IEC 60534-3-1

Edition 2.0 2019-02

INTERNATIONAL STANDARD

NORME INTERNATIONALE

Industrial-process control valves – Part 3-1: Dimensions – Face-to-face dimensions for flanged, two-way, globe-type, straight pattern and centre-to-face dimensions for flanged, two-way, globe-type, angle pattern control valves

Vannes de régulation des processus industriels – Partie 3-1: Dimensions – Dimensions face à face des vannes de régulation à brides, à deux voies, à soupape, à tête droite et dimensions face à axe des vannes de régulation à brides, à deux voies, à soupape, à corps d'équerre

INTERNATIONAL ELECTROTECHNICAL COMMISSION

COMMISSION ELECTROTECHNIQUE INTERNATIONALE

ICS 23.060.40; 25.040.40

ISBN 978-2-8322-8653-1

Warning! Make sure that you obtained this publication from an authorized distributor.
Attention! Veuillez vous assurer que vous avez obtenu cette publication via un distributeur agréé.

® Registered trademark of the International Electrotechnical Commission
Marque déposée de la Commission Electrotechnique Internationale

Documents
Document Sharing Hub

Full document details: IEC 60534-3-1-2019

CONTENTS

FOREWORD 3
1 Scope 5
2 Normative references 5
3 Terms and definitions 5
4 Nominal sizes and pressure ratings 6
4.1 Nominal sizes 6
4.2 Pressure ratings 6
5 Face-to-face and centre-to-face dimensions 7
6 Tolerances 7
7 Flange facings 7
Bibliography 13

Figure 1 – Face-to-face and centre-to-face dimensions 6
Figure 2 – End-to-end and centre-to-end dimensions 6
Figure 3 – Details of RTJ flanges 7

Table 1 – Face-to-face dimensions for flanged, two-way, globe-style, straight pattern control valves: PN-designated valves 8
Table 2 – Face-to-face dimensions for flanged, two-way, globe-style, straight pattern control valves: class-designated valves 9
Table 3 – Centre-to-face dimensions for flanged, two-way, globe-style, angle pattern control valves: PN-designated valves 10
Table 4 – Centre-to-face dimensions for flanged, two-way, globe-style, angle pattern control valves: class-designated valves 11
Table 5 – Dimension “X” to be added to face-to-face dimensions of straight pattern valves to obtain end-to-end dimensions of valves with ring joint ends 12

Documents
Document Sharing Hub

Full document details: IEC 60534-3-1-2019

INTERNATIONAL ELECTROTECHNICAL COMMISSION

INDUSTRIAL-PROCESS CONTROL VALVES –

Part 3-1: Dimensions – Face-to-face dimensions for flanged, two-way, globe-type, straight pattern and centre-to-face dimensions for flanged, two-way, globe-type, angle pattern control valves

FOREWORD

1) The International Electrotechnical Commission (IEC) is a worldwide organization for standardization comprising all national electrotechnical committees (IEC National Committees). The object of IEC is to promote international co-operation on all questions concerning standardization in the electrical and electronic fields. To this end and in addition to other activities, IEC publishes International Standards, Technical Specifications, Technical Reports, Publicly Available Specifications (PAS) and Guides (hereafter referred to as "IEC Publication(s)"). Their preparation is entrusted to technical committees; any IEC National Committee interested in the subject dealt with may participate in this preparatory work. International, governmental and non-governmental organizations liaising with the IEC also participate in this preparation. IEC collaborates closely with the International Organization for Standardization (ISO) in accordance with conditions determined by agreement between the two organizations.

2) The formal decisions or agreements of IEC on technical matters express, as nearly as possible, an international consensus of opinion on the relevant subjects since each technical committee has representation from all interested IEC National Committees.

3) IEC Publications have the form of recommendations for international use and are accepted by IEC National Committees in that sense. While all reasonable efforts are made to ensure that the technical content of IEC Publications is accurate, IEC cannot be held responsible for the way in which they are used or for any misinterpretation by any end user.

4) In order to promote international uniformity, IEC National Committees undertake to apply IEC Publications transparently to the maximum extent possible in their national and regional publications. Any divergence between any IEC Publication and the corresponding national or regional publication shall be clearly indicated in the latter.

5) IEC itself does not provide any attestation of conformity. Independent certification bodies provide conformity assessment services and, in some areas, access to IEC marks of conformity. IEC is not responsible for any services carried out by independent certification bodies.

6) All users should ensure that they have the latest edition of this publication.

7) No liability shall attach to IEC or its directors, employees, servants or agents including individual experts and members of its technical committees and IEC National Committees for any personal injury, property damage or other damage of any nature whatsoever, whether direct or indirect, or for costs (including legal fees) and expenses arising out of the publication, use of, or reliance upon, this IEC Publication or any other IEC Publications.

8) Attention is drawn to the Normative references cited in this publication. Use of the referenced publications is indispensable for the correct application of this publication.

9) Attention is drawn to the possibility that some of the elements of this IEC Publication may be the subject of patent rights. IEC shall not be held responsible for identifying any or all such patent rights.

International Standard IEC 60534-3-1 has been prepared by subcommittee 65B: Measurement and control devices, of IEC technical committee 65: Industrial-process measurement, control and automation.

This second edition cancels and replaces the first edition published in 2000. This edition constitutes a technical revision.

The main changes with respect to the previous edition are listed below:

- this document has been extended to cover face-to-face dimensions and centre-to-face dimensions for control valves PN 160 and PN 250 (Class 900 and 1 500);
- definitions of end-to-end dimensions and centre-to-end dimensions have been added for valves with flange facings where the gasket contact surfaces are not located at the extreme ends of the valve;

AVA Documents Document Sharing Hub

Full document details: IEC 60534-3-1-2019

- Table 5 of adjustment value “X” for end-to-end dimensions of straight pattern valves with ring joint ends has been added;
- ANSI/ISA references have been added in Tables 1 to 4;
- ANSI/ISA references have been added in the bibliography.

The text of this International Standard is based on the following documents:

FDIS	Report on voting
65B/1142/FDIS	65B/1146/RVD

Full information on the voting for the approval of this International Standard can be found in the report on voting indicated in the above table.

This document has been drafted in accordance with the ISO/IEC Directives, Part 2.

The committee has decided that the contents of this document will remain unchanged until the stability date indicated on the IEC website under "http://webstore.iec.ch" in the data related to the specific document. At this date, the document will be

- reconfirmed,
- withdrawn,
- replaced by a revised edition, or
- amended.

Documents
Document Sharing Hub

Full document details: IEC 60534-3-1-2019

INDUSTRIAL-PROCESS CONTROL VALVES –

Part 3-1: Dimensions – Face-to-face dimensions for flanged, two-way, globe-type, straight pattern and centre-to-face dimensions for flanged, two-way, globe-type, angle pattern control valves

1 Scope

This part of IEC 60534 specifies face-to-face (FTF) and centre-to-face (CTF) dimensions for given nominal sizes and pressure ratings of flanged, two-way, globe-type, straight pattern and angle pattern control valves. The nominal sizes included are DN 15 to DN 400 for straight pattern control valves and DN 15 to DN 400 for angle pattern control valves.

2 Normative references

The following documents are referred to in the text in such a way that some or all of their content constitutes requirements of this document. For dated references, only the edition cited applies. For undated references, the latest edition of the referenced document (including any amendments) applies.

IEC 60534-1, *Industrial-process control valves – Part 1: Control valve terminology and general considerations*

3 Terms and definitions

For the purposes of this document, the terms and definitions given in IEC 60534-1 and the following apply.

ISO and IEC maintain terminological databases for use in standardization at the following addresses:

- IEC Electropedia: available at http://www.electropedia.org/
- ISO Online browsing platform: available at http://www.iso.org/obp

3.1
straight pattern valve
valve where the outlet end connection is on the opposite side of the valve and in line with the inlet end connection

3.2
angle pattern valve
valve where the inlet and the outlet end connections are arranged at a right angle with the centerlines matching each other

3.3
face-to-face dimension (FTF)
<for straight pattern valves> distance between the faces of the connecting end flanges upon which the gaskets are compressed, that is, the contact surfaces (see Figure 1)

3.4
centre-to-face dimension (CTF)
<for angle pattern valves> distance between the plane located at the face of either end connection and perpendicular to its axis and the axis of the other end connection (see Figure 1)

Documents
Document Sharing Hub

Full document details: IEC 60534-3-1-2019

3.5
end-to-end dimension (ETE)
<for straight pattern valves> distance between the extreme ends of the valve for those flanged valves where the gasket contact surfaces are not located at the extreme ends of the valve (see Figures 2 and 3)

3.6
centre-to-end dimension (CTE)
<for angle pattern valves> distance between the plane located at the extreme end of either end connection and perpendicular to its axis and the axis of the other end connection for those flanged valves where the gasket contact surfaces are not located at the extreme ends of the valve (see Figures 2 and 3)

4 Nominal sizes and pressure ratings

4.1 Nominal sizes

Nominal sizes shall be as shown in Table 1 to Table 4.

4.2 Pressure ratings

Pressure ratings shall be grouped by Class and nominal pressure (PN) as shown in Table 1 to Table 4.

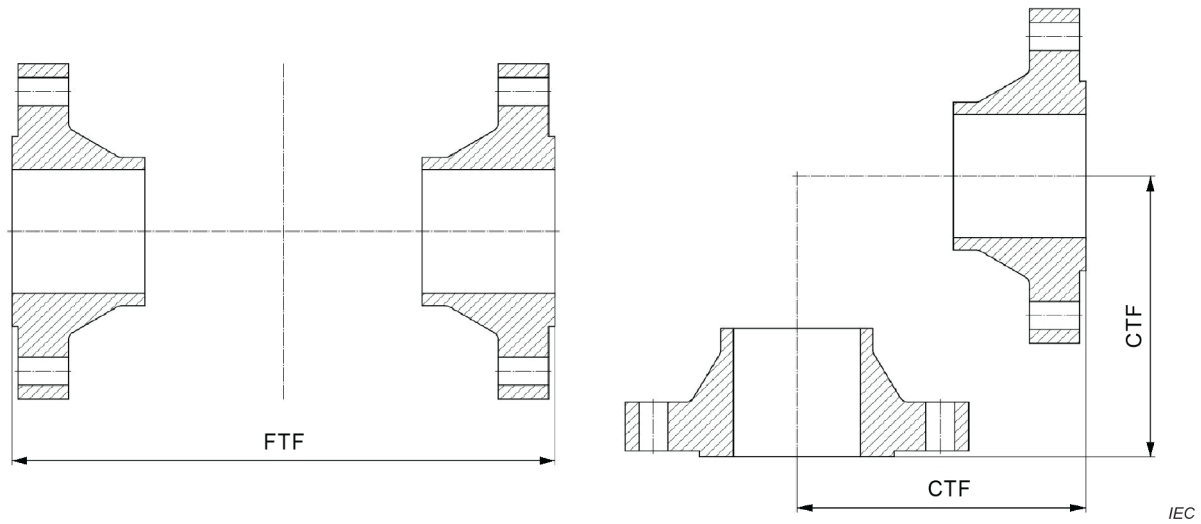

Figure 1 – Face-to-face and centre-to-face dimensions

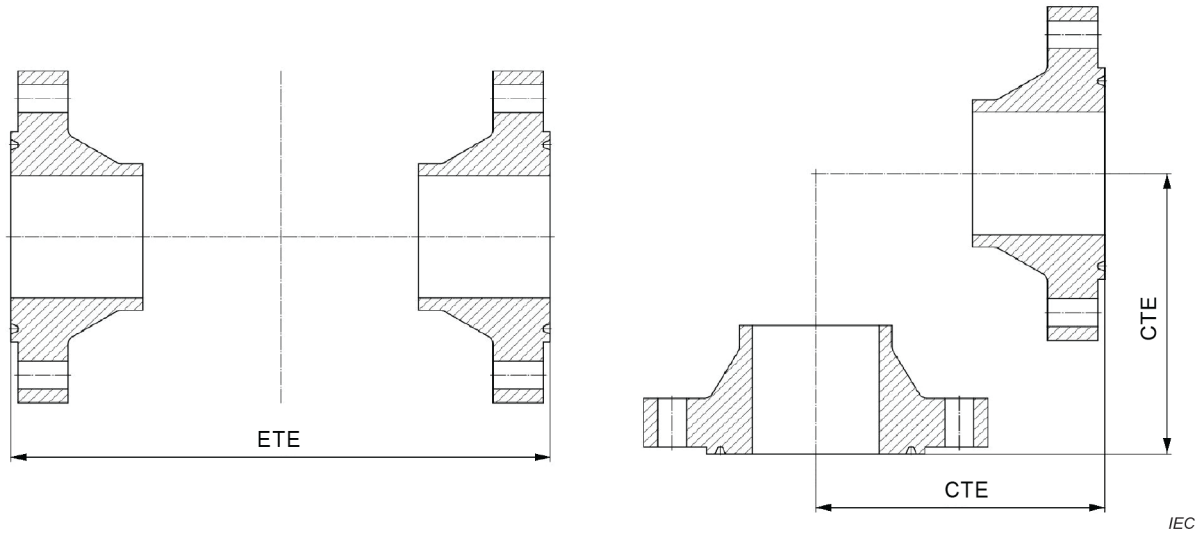

Figure 2 – End-to-end and centre-to-end dimensions

Documents
Document Sharing Hub
Full document details: IEC 60534-3-1-2019

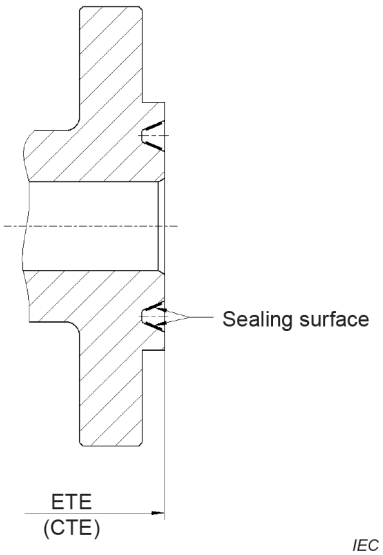

Figure 3 – Details of RTJ flanges

5 Face-to-face and centre-to-face dimensions

FTF and CTF dimensions shall be taken from Table 1 to Table 4. These tables shall be used only in conjunction with the range of nominal sizes and groups of pressure ratings given in the tables.

Control valve FTF and CTF dimensions taken from a given pressure rating group shall be the same; however, control valves may differ in other respects.

NOTE Pressure ratings have been grouped as shown in the tables in order to restrict the number of FTF and CTF dimensions.

6 Tolerances

Tolerances on FTF and CTF dimensions shall be as shown in Table 1 to Table 4.

7 Flange facings

This document only provides FTF and CTF dimensions for control valves with plain-face or raised-face flanges. The FTF and CTF dimensions include the raised face, if provided, as specified in the appropriate flange standard.

For end-to-end dimensions of straight pattern valves with ring joint ends (Figure 2b), dimension „X“ as given in Table 5 shall be added to the face-to-face dimension given in Table 1 and Table 2. For centre-to-end dimension of angle pattern valves with ring joint ends half of dimension „X“ shall be applied to the centre-to-face dimension given in Table 3 and Table 4.

Dimension “X” as given in Table 5 is taken from the metric values given in ASME B16.10-2009.

Control valves with flanges having other special facings such as male and female flange facing or tongue-and-groove are not covered by this part of IEC 60534.

Documents
Document Sharing Hub
Full document details: IEC 60534-3-1-2019