# IEC 60598-2-2

Edition 4.0 2023-01
COMMENTED VERSION

# INTERNATIONAL STANDARD

colour inside

## Luminaires –
## Part 2-2: Particular requirements – Recessed luminaires and recessed air-handling luminaires

IEC 60598-2-2:2023-01 CMV(en)

Documents
Document Sharing Hub

Full document details: IEC 60598-2-2 2023 CMV

**THIS PUBLICATION IS COPYRIGHT PROTECTED**
**Copyright © 2023 IEC, Geneva, Switzerland**

All rights reserved. Unless otherwise specified, no part of this publication may be reproduced or utilized in any form or by any means, electronic or mechanical, including photocopying and microfilm, without permission in writing from either IEC or IEC's member National Committee in the country of the requester. If you have any questions about IEC copyright or have an enquiry about obtaining additional rights to this publication, please contact the address below or your local IEC member National Committee for further information.

IEC Secretariat
3, rue de Varembé
CH-1211 Geneva 20
Switzerland

Tel.: +41 22 919 02 11
info@iec.ch
www.iec.ch

**About the IEC**
The International Electrotechnical Commission (IEC) is the leading global organization that prepares and publishes International Standards for all electrical, electronic and related technologies.

**About IEC publications**
The technical content of IEC publications is kept under constant review by the IEC. Please make sure that you have the latest edition, a corrigendum or an amendment might have been published.

**IEC publications search - webstore.iec.ch/advsearchform**
The advanced search enables to find IEC publications by a variety of criteria (reference number, text, technical committee, …). It also gives information on projects, replaced and withdrawn publications.

**IEC Just Published - webstore.iec.ch/justpublished**
Stay up to date on all new IEC publications. Just Published details all new publications released. Available online and once a month by email.

**IEC Customer Service Centre - webstore.iec.ch/csc**
If you wish to give us your feedback on this publication or need further assistance, please contact the Customer Service Centre: sales@iec.ch.

**IEC Products & Services Portal - products.iec.ch**
Discover our powerful search engine and read freely all the publications previews. With a subscription you will always have access to up to date content tailored to your needs.

**Electropedia - www.electropedia.org**
The world's leading online dictionary on electrotechnology, containing more than 22 300 terminological entries in English and French, with equivalent terms in 19 additional languages. Also known as the International Electrotechnical Vocabulary (IEV) online.

AVA Documents
Document Sharing Hub

Full document details: IEC 60598-2-2 2023 CMV

# IEC 60598-2-2

Edition 4.0 2023-01
COMMENTED VERSION

# INTERNATIONAL STANDARD

colour inside

## Luminaires –
## Part 2-2: Particular requirements – Recessed luminaires and recessed air-handling luminaires

INTERNATIONAL
ELECTROTECHNICAL
COMMISSION

ICS 29.140.50

ISBN 978-2-8322-6371-6

**Warning! Make sure that you obtained this publication from an authorized distributor.**

® Registered trademark of the International Electrotechnical Commission

Documents
Document Sharing Hub

Full document details: IEC 60598-2-2 2023 CMV

CONTENTS

FOREWORD ..... 3
2.1 Scope ..... 5
2.2 Normative references ..... 5
2.3 Terms and definitions ..... 5
2.4 General test requirements ..... 6
2.5 Classification of luminaires ..... 6
2.6 Marking ..... 6
2.7 Construction ..... 7
2.8 Creepage distances and clearances ..... 7
2.9 Provision for earthing ..... 7
2.10 Terminals ..... 7
2.11 External and internal wiring ..... 7
2.12 Protection against electric shock ..... 7
2.13 Endurance tests and thermal tests ..... 8
2.14 Resistance to dust and moisture ..... 9
2.15 Insulation resistance and electric strength ..... 9
2.16 Resistance to heat, fire and tracking ..... 9

Annex A (~~informative~~ normative) Measurement of ambient temperature in an installation ..... 10
Annex B (normative) Recessed luminaires thermal test methods ..... 11
Annex C (informative) Explanation of $t_a$ with respect to air-handling luminaires ..... 14
Annex D (informative) Schedule of amended subclauses containing more serious or critical requirements which require products to be retested ..... 15
Bibliography ..... 16
List of comments ..... 17

Figure 1 – Symbol for luminaires not suitable for direct mounting on normally flammable surfaces (suitable only for mounting on non-combustible surfaces) ..... 6
Figure 2 – Symbol for luminaires not suitable for covering with thermally insulating material ..... 7
Figure B.1 – Example of test recess where a luminaire suitable for covering with thermal insulating material comprises separate parts ..... 11
Figure B.2 – Example of test recess where a luminaire not suitable for covering with thermal insulating material comprises separate parts ..... 12
Figure B.3 – Correct test box size (insulating ceilings) for settable and adjustable luminaires ..... 13

Table 1 – Operating temperature of cable ..... 8

Documents
Document Sharing Hub
Full document details: IEC 60598-2-2 2023 CMV

INTERNATIONAL ELECTROTECHNICAL COMMISSION

# LUMINAIRES –

## Part 2-2: Particular requirements – Recessed luminaires and recessed air-handling luminaires 1

## FOREWORD

1) The International Electrotechnical Commission (IEC) is a worldwide organization for standardization comprising all national electrotechnical committees (IEC National Committees). The object of IEC is to promote international co-operation on all questions concerning standardization in the electrical and electronic fields. To this end and in addition to other activities, IEC publishes International Standards, Technical Specifications, Technical Reports, Publicly Available Specifications (PAS) and Guides (hereafter referred to as "IEC Publication(s)"). Their preparation is entrusted to technical committees; any IEC National Committee interested in the subject dealt with may participate in this preparatory work. International, governmental and non-governmental organizations liaising with the IEC also participate in this preparation. IEC collaborates closely with the International Organization for Standardization (ISO) in accordance with conditions determined by agreement between the two organizations.
2) The formal decisions or agreements of IEC on technical matters express, as nearly as possible, an international consensus of opinion on the relevant subjects since each technical committee has representation from all interested IEC National Committees.
3) IEC Publications have the form of recommendations for international use and are accepted by IEC National Committees in that sense. While all reasonable efforts are made to ensure that the technical content of IEC Publications is accurate, IEC cannot be held responsible for the way in which they are used or for any misinterpretation by any end user.
4) In order to promote international uniformity, IEC National Committees undertake to apply IEC Publications transparently to the maximum extent possible in their national and regional publications. Any divergence between any IEC Publication and the corresponding national or regional publication shall be clearly indicated in the latter.
5) IEC itself does not provide any attestation of conformity. Independent certification bodies provide conformity assessment services and, in some areas, access to IEC marks of conformity. IEC is not responsible for any services carried out by independent certification bodies.
6) All users should ensure that they have the latest edition of this publication.
7) No liability shall attach to IEC or its directors, employees, servants or agents including individual experts and members of its technical committees and IEC National Committees for any personal injury, property damage or other damage of any nature whatsoever, whether direct or indirect, or for costs (including legal fees) and expenses arising out of the publication, use of, or reliance upon, this IEC Publication or any other IEC Publications.
8) Attention is drawn to the Normative references cited in this publication. Use of the referenced publications is indispensable for the correct application of this publication.
9) Attention is drawn to the possibility that some of the elements of this IEC Publication may be the subject of patent rights. IEC shall not be held responsible for identifying any or all such patent rights.

**This commented version (CMV) of the official standard IEC 60598-2-2:2023 edition 4.0 allows the user to identify the changes made to the previous IEC 60598-2-2:2011 edition 3.0. Furthermore, comments from IEC SC 34D experts are provided to explain the reasons of the most relevant changes, or to clarify any part of the content.**

**A vertical bar appears in the margin wherever a change has been made. Additions are in green text, deletions are in strikethrough red text. Experts' comments are identified by a blue-background number. Mouse over a number to display a pop-up note with the comment.**

**This publication contains the CMV and the official standard. The full list of comments is available at the end of the CMV.**

Documents
Document Sharing Hub

Full document details: IEC 60598-2-2 2023 CMV

IEC 60598-2-2 has been prepared by subcommittee 34D: Luminaires, of IEC technical committee 34:Lighting. It is an International Standard.

This fourth edition cancels and replaces the third edition published in 2011. This edition constitutes a technical revision.

This edition includes the following significant technical changes with respect to the previous edition (there are no major technical changes, see Annex D):

a) The requirements specific to recessed luminaries given in IEC 60598-1 are now incorporated in this Part 2-2.

b) The requirements for air-handling luminaires given in IEC 60598-2-19 are now incorporated in this Part 2-2.

c) The references to Part 1 have been updated.

The text of this International Standard is based on the following documents:

| Draft | Report on voting |
|---|---|
| 34D/1681/FDIS | 34D/1688/RVD |

Full information on the voting for its approval can be found in the report on voting indicated in the above table.

The language used for the development of this International Standard is English.

This document was drafted in accordance with ISO/IEC Directives, Part 2, and developed in accordance with ISO/IEC Directives, Part 1 and ISO/IEC Directives, IEC Supplement, available at www.iec.ch/members_experts/refdocs. The main document types developed by IEC are described in greater detail at www.iec.ch/standardsdev/publications.

A list of all parts in the IEC 60598 series, published under the general title *Luminaires* can be found on the IEC website.

This Part 2-2 is to be used in conjunction with the latest edition of IEC 60598-1 and its amendment(s). It was established on the basis of the ninth edition (2020).

NOTE 1 When "Part 1" is mentioned in this document, it refers to IEC 60598-1.

NOTE 2 In this document, the following print type is used:

– compliance statements: *in italic type*.

The committee has decided that the contents of this document will remain unchanged until the stability date indicated on the IEC website under webstore.iec.ch in the data related to the specific document. At this date, the document will be

- reconfirmed,
- withdrawn,
- replaced by a revised edition, or
- amended.

**IMPORTANT – The "colour inside" logo on the cover page of this document indicates that it contains colours which are considered to be useful for the correct understanding of its contents. Users should therefore print this document using a colour printer.**

Documents
Document Sharing Hub

Full document details: IEC 60598-2-2 2023 CMV

# LUMINAIRES –

## Part 2-2: Particular requirements – Recessed luminaires and recessed air-handling luminaires

### 2.1 Scope

This part of IEC 60598 specifies requirements for recessed luminaires incorporating electric light sources for operation from supply voltages up to 1 000 V. ~~This section does not apply to air-handling or liquid-cooled luminaires.~~ It also specifies requirements for recessed air-handling luminaires for use with a ventilation duct or ventilated space (plenum).

NOTE The expressions "ventilation" and "ventilated" in this document refer to forced ventilation.

### 2.2 Normative references

The following documents are referred to in the text in such a way that some or all of their content constitutes requirements of this document. For dated references, only the edition cited applies. For undated references, the latest edition of the referenced document (including any amendments) applies.

IEC 60227 (all parts), *Polyvinyl chloride insulated cables of rated voltages up to and including 450/750 V*

IEC 60245 (all parts), *Rubber insulated cables – Rated voltages up to and including 450/750 V*

IEC 60598-1, *Luminaires – Part 1: General requirements and tests*

### 2.3 Terms and definitions

For the purposes of this document, the terms and definitions given in Part 1 and the following apply.

ISO and IEC maintain terminology databases for use in standardization at the following addresses:

- IEC Electropedia: available at https://www.electropedia.org/
- ISO Online browsing platform: available at https://www.iso.org/obp

**2.3.1**
**air-handling luminaire** 2
luminaire specially designed for use in association with an air conditioning system

Note 1 to entry: The air can pass either through the lamp chamber or through separate passages.

Note 2 to entry: For an explanation of the significance of $t_a$ as applied to air-handling luminaires, see Annex C.

**2.3.2**
**static operation** 3
operation of a luminaire when not handling either forced supply or extract air but permitting natural convection

Documents
Document Sharing Hub
Full document details: IEC 60598-2-2 2023 CMV

## 2.4 General test requirements

The provisions of Section 0 of Part 1 apply. The tests described in each appropriate section of Part 1 shall be carried out in the order listed in this document.

A procedure measuring ambient temperature in an installation is given in Annex A.

NOTE Annex A provides additional information on how ambient temperature is considered within the recessed cavity area relative to the $t_a$ marking of the luminaire.

## 2.5 Classification of luminaires

Luminaires shall be classified in accordance with the provisions of Section 2 of Part 1.

## 2.6 Marking 4

**2.6.1** The provisions of Section 3 of Part 1 apply, together with the requirements of 2.6.2, 2.6.3 and 2.6.4.

The following information shall be distinctly and durably marked on the luminaire and be visible during installation or behind a cover or part which is removed during installation.

**2.6.2** For recessed luminaires with two IP ratings, both ratings shall be visible during installation and it shall be obvious to which parts of the luminaire the ratings refer. The relevant information shall be provided even if the rating is IP20 or the lower rating is specified as ordinary.

**2.6.3** Where applicable, the relevant symbol for recessed luminaires not suitable for direct mounting on normally flammable surfaces shall be distinctly and durably marked on the luminaire and be visible during installation or behind a cover or part which is removed during installation.

When marked, this symbol shall be explained on the luminaire or in the manufacturer's instructions provided with the luminaire.

The minimum size of the symbol shall be 25 mm for each side. See Figure 1.

**Figure 1 – Symbol for luminaires not suitable for direct mounting on normally flammable surfaces (suitable only for mounting on non-combustible surfaces)**

**2.6.4** Where applicable, the relevant symbol for luminaires not suitable for covering with thermally insulated material shall be distinctly and durably marked on the luminaire and be visible during installation or behind a cover or part which is removed during installation.

When marked, this symbol shall be explained on the luminaire or in the manufacturer's instructions provided with the luminaire.

The minimum size of the symbol shall be 25 mm for each side. See Figure 2.

Documents
Document Sharing Hub
Full document details: IEC 60598-2-2 2023 CMV

**Figure 2 – Symbol for luminaires not suitable for covering with thermally insulating material**

## 2.7 Construction

The provisions of Section 4 of Part 1 apply.

## 2.8 Creepage distances and clearances

The provisions of Section 11 of Part 1 apply.

## 2.9 Provision for earthing

The provisions of Section 7 of Part 1 apply.

## 2.10 Terminals

The provisions of Sections 14 and 15 of Part 1 apply.

## 2.11 External and internal wiring

The provisions of Section 5 of Part 1 apply, together with the following.

Flexible cables or cords used as a means of connection to the supply, when supplied by the luminaire manufacturer, shall be at least equal in their mechanical and electrical properties to those specified in the IEC 60227 series or the IEC 60245 series and shall be capable of withstanding without deterioration the highest temperature to which they ~~may~~ can be exposed under normal conditions of use. Materials other than PVC and rubber are suitable if the above requirements are met.

*Compliance shall be checked by the tests specified in Clause 2.13.*

NOTE The use of flexible cables and cords with recessed luminaires is appropriate for the following reasons:

1) The flexible cable or cord cannot be easily touched as it is normally out of reach within the recess.
2) To facilitate installation of the luminaire into the recess.
3) To permit the adjustment of settable and adjustable recessed luminaires.

## 2.12 Protection against electric shock

The provisions of Section 8 of Part 1 apply, together with the following.

The parts of the luminaire and components within the ceiling space or cavity shall provide the same degree of protection against electric shock as the luminaire parts below the ceiling space.

NOTE The ceiling space or cavity is regarded as accessible for installation and maintenance, and the barriers do not provide adequate protection against electric shock.

*Compliance is checked by inspection.*

Documents
Document Sharing Hub

Full document details: IEC 60598-2-2 2023 CMV

## 2.13 Endurance tests and thermal tests

**2.13.1** The provisions of Section 12 of Part 1 apply, together with the following requirements.

**2.13.2** The luminaire shall be mounted and tested according to Annex B. **5**

Luminaires with an IP classification greater than IP20 shall be subjected to the relevant tests of Clauses 12.4, 12.5, 12.6 and 12.7 of Section 12 of Part 1 after the test(s) of Clause 9.2 but before the test(s) of Clause 9.3 of Section 9 of Part 1 specified in Clause 2.14 of this document.

**2.13.3** Wiring, for connection to the supply, which passes into or can touch the luminaire, shall not reach an unsafe temperature.

*Compliance shall be checked by the following tests:*

*The luminaire is connected to the supply using the cable provided with the luminaire or using a cable in accordance with the marking on the luminaire or, if not marked, as specified in the manufacturer's instruction sheet; otherwise PVC cable complying with the IEC 60227 series is used.*

*The hottest point is found (along the internal route or on the outer surface of the luminaire) with which the cable is likely to lie in contact during normal service. The cable is lightly held in contact at this point and the temperature of the insulation at the point of contact is measured as described in Annex K of Part 1.*

*The operating temperature of the cable shall not exceed the limits given in* Table 1.

~~*Luminaires with an IP classification greater than IP20 shall be subjected to the relevant tests of Clauses 12.4, 12.5, 12.6 and 12.7 of Section 12 of IEC 60598-1 after the test(s) of Clause 9.2 but before the test(s) of Clause 9.3 of Section 9 of IEC 60598-1 specified in Clause 2.14 of this section of IEC 60598-2.*~~

**Table 1 – Operating temperature of cable**

| Designation of cable | Limit of operating temperature |
|---|---|
| Cable (including sleeves) provided with the luminaire | The maximum temperature specified in Table 12.2 of Part 1 |
| Cable not provided with the luminaire: | |
| a) luminaires with cable temperature marking | The marked temperature |
| b) luminaires without cable temperature marking | The maximum temperature specified in Table 12.2 of Part 1 for ordinary PVC not subject to mechanical stress |

**2.13.4** The test for air-handling luminaires is made under static operating conditions. **6**

When testing air-handling luminaires with stubs for connection of ventilation ducts, the stubs are suitably connected to the sides or to the top of the test box according to the installation instructions.

a) Normal operating conditions: During the test, the temperature of upward facing surfaces within the main air path shall not exceed 100 °C, except that for surfaces of light sources, the temperature shall not exceed 150 °C.

a) Abnormal operating conditions: The temperature of the convection air when leaving the luminaire shall not exceed 100 °C. During the test, the temperature of upward facing surfaces within the main air path shall not exceed 130 °C except that for surfaces of light sources, the temperature shall not exceed 150 °C.

AVA Documents
Document Sharing Hub

## 2.14 Resistance to dust and moisture

**2.14.1** The provisions of Section 9 of Part 1 apply, as well as the following.

**2.14.2** For luminaires with an IP classification greater than IP20, the order of the tests specified in Section 9 of Part 1 shall be as specified in Clause 2.13 of this document.

**2.14.3** **7** For recessed luminaires, the parts in the recess and the parts protruding from the recess shall each be tested according to their IP classification as indicated in the manufacturer's mounting instructions. A box encapsulating the part in the recess can be necessary.

NOTE The claimed IP rating is only applicable to the enclosure of the luminaire. In the case of a recessed luminaire, the IP rating of the luminaire does not protect the integrity of any seals outside of the luminaire, e.g. between the lower and upper parts of the ceiling.

## 2.15 Insulation resistance and electric strength

The provisions of Section 10 of Part 1 apply.

## 2.16 Resistance to heat, fire and tracking

The provisions of Section 13 of Part 1 apply.

Documents
Document Sharing Hub

Full document details: IEC 60598-2-2 2023 CMV

# Annex A
(~~informative~~ normative)

## Measurement of ambient temperature in an installation

Care is needed in deciding whether a recessed luminaire is operating within its thermal limits in an existing lighting installation. It is even more difficult to predict whether a luminaire will be satisfactory in a proposed installation and a "mock-up" is usually required. In the past, there have been instances of overheating of luminaires, for example, overheating owing to the presence of heating services above the ceiling plane.

The following procedure is for measuring the ambient temperature in which the luminaire operates. The $t_a$ rating of the luminaire should be at least equal to this ambient temperature. The ambient temperature is measured in the plane of the ceiling (or other mounting surface) at the mid-point of a typical cavity. It is important that all other luminaires in the installation and all other services which ~~may~~ can affect the thermal conditions of the luminaire are operating. The cavity is covered above the measuring point to prevent a non-typical interchange of air and so that the cover ~~may~~ can absorb extraneous heat which would be absorbed by the luminaire.

NOTE It ~~may~~ can be convenient to insert for this purpose the shell of the luminaire.

The test recess used to measure operating temperatures of recessed luminaires is intended to represent the most onerous closed recess (without other heat source) which is likely to be experienced in service. A recessed luminaire should not be installed in a cavity with a volume smaller than that of the test recess, unless the manufacturer of the luminaire has verified that operation will be satisfactory.

The test recess ~~may~~ can also approximate to the thermal conditions above a suspended ceiling if the larger air volume is offset by heat-emitting services. In a particular installation, more onerous thermal conditions than this ~~may~~ can exist and it is, therefore, essential to carry out a practical check. Conversely, the space above the ceiling ~~may~~ can have free air movement and no heat-emitting services; for such an installation, the $t_a$ rating of the luminaire as determined in the test recess incorporates a temperature margin and the $t_a$ rating may be exceeded if the manufacturer of the luminaire has verified that operation in the particular installation will be satisfactory.

During tests, to determine or check a $t_a$ rating for a luminaire, measurements of ambient temperature are made inside the draught-proof enclosure and outside the test recess in accordance with Annex K of Part 1.

Documents
Document Sharing Hub
Full document details: IEC 60598-2-2 2023 CMV

# Annex B
(normative)

## Recessed luminaires thermal test methods 8

The requirements of Annex D of Part 1 are applicable with the following additional requirements.

Recessed luminaires suitable for covering with thermal insulating material are mounted in a test recess consisting of a suspended ceiling and thermal insulation material positioned in direct contact with the luminaire.

Recessed luminaires not suitable for covering with thermal insulating material are mounted in a test recess consisting of a suspended ceiling, on top of which is a rectangular box with vertical sides and horizontal top.

The suspended ceiling is made of a 12 mm thick general use particle board, in which a suitable opening has been made for the luminaire. The general use particle board shall extend at least 100 mm outside the projection of the luminaire on this board.

NOTE 1 An example of general used particle board is boards manufactured according to ISO 16893.

a) Luminaires for recessing into ceilings with thermal insulating material covering the luminaire

Thermal insulating material is tightly fitted to the outside of the luminaire. The thermal insulation shall be equivalent to two 10 cm thick layers of mineral wool with a coefficient of thermal resistivity of 0,04 W/(m · K). Thinner layers can be used when having a higher thermal resistivity. If a luminaire is provided with separate parts intended for recessed mounting, (for example, with separate light source enclosure and controlgear enclosure), the test recess shall be constructed observing the manufacturer's recommendations for minimum spacing between parts (see Figure B.1). The space shall be filled with insulating material.

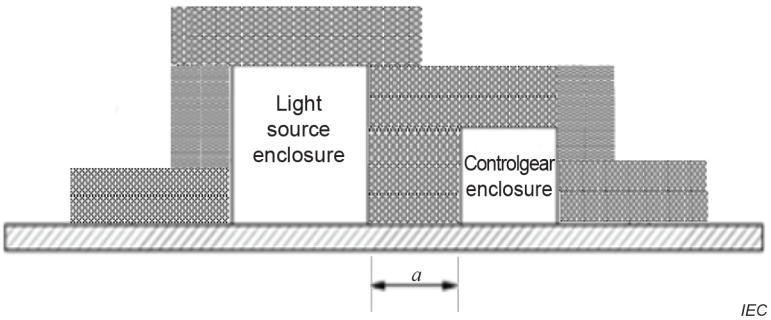


**Key**

*a* minimum separation as specified by the manufacturer

**Figure B.1 – Example of test recess where a luminaire suitable for covering with thermal insulating material comprises separate parts**

b) Luminaires for recessing into ceilings but not suitable for covering with thermal insulating material.

For recessed luminaires of this kind, the test recess consisting of a suspended ceiling, on top of which is a rectangular box with vertical sides and horizontal top, shall be fixed above the luminaire. The vertical sides of the box are made of 19 mm thick laminated wood and the top of 12 mm thick general use particle board tightly sealed to the sides.

The sides and top of the box shall be spaced from the luminaire in accordance with the manufacturer's instructions supplied with the luminaire. If no spacing is specified, the sealed box shall touch the luminaire all around.

Documents
Document Sharing Hub
Full document details: IEC 60598-2-2 2023 CMV

If a luminaire is provided with separate parts intended for recessed mounting, (for example, with separate light source enclosure and controlgear enclosure), the test recess shall be constructed as a single box observing the manufacturer's recommendations for minimum spacing between parts and the inside of the recess (see Figure B.2). Where spacing between parts is not specified (item '*a*' of Figure B.2), separate test recesses shall be used for each part.

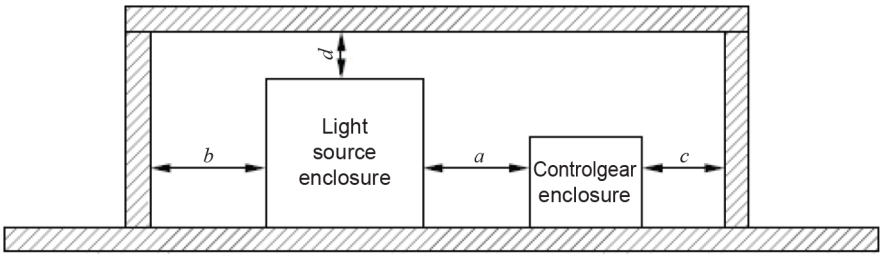


IEC

**Key**

*a, b, c, d* minimum separation as specified by the manufacturer

**Figure B.2 – Example of test recess where a luminaire not suitable for covering with thermal insulating material comprises separate parts**

If there are projecting spacers on the top or sides of the luminaire, then these spacers shall be placed in direct contact with the inside surfaces of the test box or insulating material.

The suspended ceiling and the interior of the box are painted black with a matt non-metallic paint, and there shall be a gap of not less than 100 mm between this assembly and the inside walls, ceiling and floor of the test enclosure.

NOTE 2 In Australia and New Zealand recessed luminaires are classified and tested for installations with thermal insulation in accordance with AS/NZS 60598-2-2, Particular requirements – Recessed Luminaires.

NOTE 3 It is acceptable in Japan to apply this Annex B or JIL 5002 for the thermal test on recessed luminaires.

When a luminaire is intended to be recessed into a wall, the test is made using a test recess similar to that described above, but with the board placed vertically.

For luminaires classified for mounting in direct contact with a normally flammable surface and suitable for covering with thermal insulating material, no part of the insulating material and the luminaire surface above the suspended ceiling shall exceed 90 °C during the normal operation thermal test and 130 °C during the abnormal operation thermal test.

For luminaires classified for mounting in direct contact with a normally flammable surface not suitable for covering with thermal insulating material, no part of the test recess shall exceed 90 °C during the normal operation thermal test and 130 °C during the abnormal operation thermal test.

For luminaires classified as not suitable for direct mounting on normally flammable surfaces, no temperatures are measured for the mounting surface or test recess.

All spacings shall be measured from the extremes of the positions of movement where luminaires are settable and adjustable in overall dimension or position in either axis when fully installed and during normal operation (see Figure B.3).

Figure B.3 illustrates the correct test box size for a luminaire that is adjustable in both axes and thus needs space within a ceiling for the setting or the adjustment.

Documents
Document Sharing Hub
Full document details: IEC 60598-2-2 2023 CMV

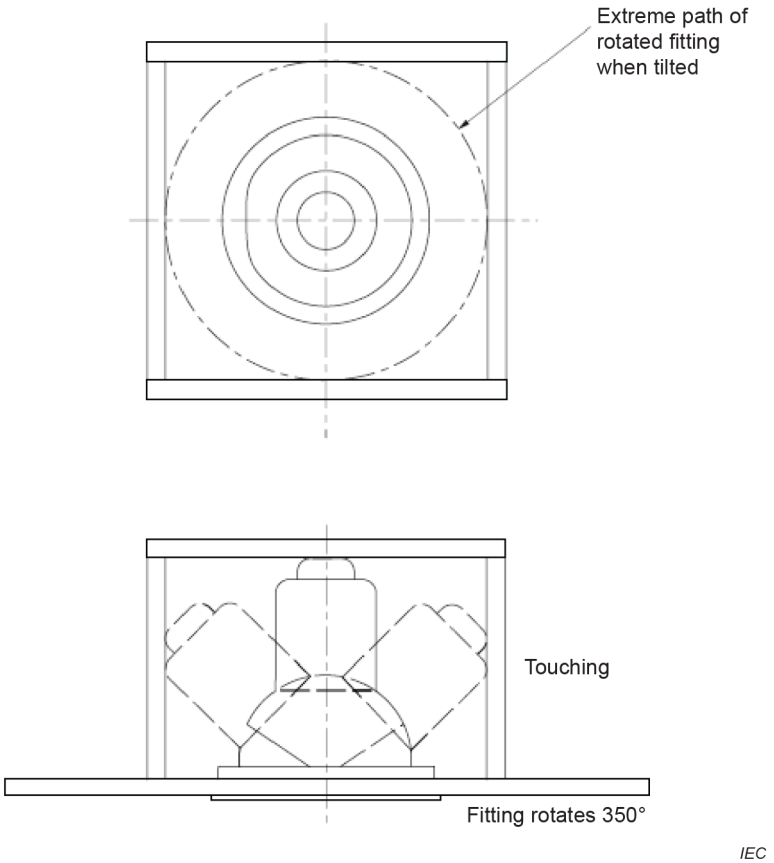


**Figure B.3 – Correct test box size (insulating ceilings) for settable and adjustable luminaires**

Documents
Document Sharing Hub
Full document details: IEC 60598-2-2 2023 CMV

# Annex C
(informative)

## Explanation of $t_a$ with respect to air-handling luminaires 9

"Rated maximum ambient temperature" (symbol: $t_a$) is defined in Part 1 and the definition includes the phrase "under normal conditions". In the case of an air-handling luminaire, "normal conditions" depend on the type of air-conditioning system with which the luminaire is associated, and it is therefore necessary to specify a set of conditions under which $t_a$ will be measured and to draw attention to the relationship between these conditions and those which can occur in practice.

The conditions specified in this document are those associated with static operation, that is when the luminaire is not handling forced supply or extract air, but permitting normal convection air flow, and the $t_a$ to be marked on the luminaire is the maximum ambient temperature in which the luminaire will operate under these conditions.

When the luminaire is installed as part of an air conditioning system, however, the ambient temperature in the vicinity of the luminaire depends on the type and characteristics of the system, and these can be assessed only by the user.

For this assessment, the temperature should be measured at the mid-point of the cavity in which the luminaire will be mounted, with a dummy or static luminaire in position to simulate restrictions which the luminaire can cause to free flow.

In order to simulate the worst conditions which can arise in forced air-flow systems, the air-circulation system should be switched off during temperature measurements on systems which either supply cooling air or extract air at room temperature, and switched on during measurements on systems supplying air above room temperature.

A luminaire chosen for use in this position should have a $t_a$ at least as high as the measured temperature.

Documents
Document Sharing Hub
Full document details: IEC 60598-2-2 2023 CMV

# Annex D
(informative)

## Schedule of amended subclauses containing more serious or critical requirements which require products to be retested

No requirements of this document are considered more onerous compared with the previous edition of IEC 60598-2-2 and with IEC 60598-2-19.

Documents
Document Sharing Hub

Full document details: IEC 60598-2-2 2023 CMV