IEC 60598-2-21

Edition 1.0 2014-11

INTERNATIONAL STANDARD

NORME INTERNATIONALE

Luminaires –
Part 2-21: Particular requirements – Rope lights

Luminaires –
Partie 2-21: Exigences particulières – Cordons lumineux

IEC 60598-2-21:2014-11(en-fr)

Documents
Document Sharing Hub

Full document details: IEC 60598-2-21 2014

THIS PUBLICATION IS COPYRIGHT PROTECTED

Copyright © 2014 IEC, Geneva, Switzerland

All rights reserved. Unless otherwise specified, no part of this publication may be reproduced or utilized in any form or by any means, electronic or mechanical, including photocopying and microfilm, without permission in writing from either IEC or IEC's member National Committee in the country of the requester. If you have any questions about IEC copyright or have an enquiry about obtaining additional rights to this publication, please contact the address below or your local IEC member National Committee for further information.

Droits de reproduction réservés. Sauf indication contraire, aucune partie de cette publication ne peut être reproduite ni utilisée sous quelque forme que ce soit et par aucun procédé, électronique ou mécanique, y compris la photocopie et les microfilms, sans l'accord écrit de l'IEC ou du Comité national de l'IEC du pays du demandeur. Si vous avez des questions sur le copyright de l'IEC ou si vous désirez obtenir des droits supplémentaires sur cette publication, utilisez les coordonnées ci-après ou contactez le Comité national de l'IEC de votre pays de résidence.

IEC Central Office
3, rue de Varembé
CH-1211 Geneva 20
Switzerland

Tel.: +41 22 919 02 11
Fax: +41 22 919 03 00
info@iec.ch
www.iec.ch

About the IEC
The International Electrotechnical Commission (IEC) is the leading global organization that prepares and publishes International Standards for all electrical, electronic and related technologies.

About IEC publications
The technical content of IEC publications is kept under constant review by the IEC. Please make sure that you have the latest edition, a corrigenda or an amendment might have been published.

IEC Catalogue - webstore.iec.ch/catalogue
The stand-alone application for consulting the entire bibliographical information on IEC International Standards, Technical Specifications, Technical Reports and other documents. Available for PC, Mac OS, Android Tablets and iPad.

IEC publications search - www.iec.ch/searchpub
The advanced search enables to find IEC publications by a variety of criteria (reference number, text, technical committee,…). It also gives information on projects, replaced and withdrawn publications.

IEC Just Published - webstore.iec.ch/justpublished
Stay up to date on all new IEC publications. Just Published details all new publications released. Available online and also once a month by email.

Electropedia - www.electropedia.org
The world's leading online dictionary of electronic and electrical terms containing more than 30 000 terms and definitions in English and French, with equivalent terms in 14 additional languages. Also known as the International Electrotechnical Vocabulary (IEV) online.

IEC Glossary - std.iec.ch/glossary
More than 55 000 electrotechnical terminology entries in English and French extracted from the Terms and Definitions clause of IEC publications issued since 2002. Some entries have been collected from earlier publications of IEC TC 37, 77, 86 and CISPR.

IEC Customer Service Centre - webstore.iec.ch/csc
If you wish to give us your feedback on this publication or need further assistance, please contact the Customer Service Centre: csc@iec.ch.

A propos de l'IEC
La Commission Electrotechnique Internationale (IEC) est la première organisation mondiale qui élabore et publie des Normes internationales pour tout ce qui a trait à l'électricité, à l'électronique et aux technologies apparentées.

A propos des publications IEC
Le contenu technique des publications IEC est constamment revu. Veuillez vous assurer que vous possédez l'édition la plus récente, un corrigendum ou amendement peut avoir été publié.

Catalogue IEC - webstore.iec.ch/catalogue
Application autonome pour consulter tous les renseignements bibliographiques sur les Normes internationales, Spécifications techniques, Rapports techniques et autres documents de l'IEC. Disponible pour PC, Mac OS, tablettes Android et iPad.

Recherche de publications IEC - www.iec.ch/searchpub

La recherche avancée permet de trouver des publications IEC en utilisant différents critères (numéro de référence, texte, comité d'études,…). Elle donne aussi des informations sur les projets et les publications remplacées ou retirées.

IEC Just Published - webstore.iec.ch/justpublished

Restez informé sur les nouvelles publications IEC. Just Published détaille les nouvelles publications parues. Disponible en ligne et aussi une fois par mois par email.

Electropedia - www.electropedia.org

Le premier dictionnaire en ligne de termes électroniques et électriques. Il contient plus de 30 000 termes et définitions en anglais et en français, ainsi que les termes équivalents dans 14 langues additionnelles. Egalement appelé Vocabulaire Electrotechnique International (IEV) en ligne.

Glossaire IEC - std.iec.ch/glossary
Plus de 55 000 entrées terminologiques électrotechniques, en anglais et en français, extraites des articles Termes et Définitions des publications IEC parues depuis 2002. Plus certaines entrées antérieures extraites des publications des CE 37, 77, 86 et CISPR de l'IEC.

Service Clients - webstore.iec.ch/csc

Si vous désirez nous donner des commentaires sur cette publication ou si vous avez des questions contactez-nous: csc@iec.ch.

Documents
Document Sharing Hub

Full document details: IEC 60598-2-21 2014

IEC 60598-2-21

Edition 1.0 2014-11

INTERNATIONAL STANDARD

NORME INTERNATIONALE

Luminaires –
Part 2-21: Particular requirements – Rope lights

Luminaires –
Partie 2-21: Exigences particulières – Cordons lumineux

INTERNATIONAL
ELECTROTECHNICAL
COMMISSION

COMMISSION
ELECTROTECHNIQUE
INTERNATIONALE

PRICE CODE
CODE PRIX
Q

ICS 29.140.40

ISBN 978-2-8322-1941-6

Warning! Make sure that you obtained this publication from an authorized distributor.
Attention! Veuillez vous assurer que vous avez obtenu cette publication via un distributeur agréé.

AVA Documents
Document Sharing Hub

® Registered trademark of the International Electrotechnical Commission
Marque déposée de la Commission Electrotechnique Internationale

Full document details: IEC 60598-2-21 2014

CONTENTS

FOREWORD 4
21.1 Scope 6
21.2 Normative references 6
21.3 Terms and definitions 7
21.4 General test requirements 7
21.5 Classification of luminaires 7
21.5.1 General 7
21.5.2 Protection against electric shock 7
21.5.3 Protection against dust, solid objects and moisture 7
21.6 Marking 8
21.6.1 General 8
21.6.2 Rope light marking 8
21.6.3 Rope light and packing marking 8
21.6.4 Packing or instruction marking 8
21.7 Construction 9
21.7.1 General 9
21.7.2 Terminal blocks 9
21.7.3 Terminals and supply connections 9
21.7.4 Control units 9
21.7.5 Mechanical strength 9
21.8 Creepage distances and clearances 13
21.9 Provisions for earthing 13
21.10 Terminals 13
21.11 External and internal wiring 13
21.11.1 General 13
21.11.2 Cables for rope lights 13
21.11.3 Cord anchorage test 14
21.11.4 Plugs and cable length 14
21.11.5 Maximum length of extendable class II rope lights 14
21.12 Protection against electric shock 14
21.13 Endurance tests and thermal tests 14
21.13.1 General 14
21.13.2 Test voltage 15
21.13.3 Short-circuit test of rectifier 15
21.14 Resistance to dust, solid objects and moisture 15
21.15 Insulation resistance and electric strength 15
21.16 Resistance to heat, fire and tracking 15
Annex A (normative) Requirements for interconnecting connectors for use in rope lights 16

Figure 1 – Example of test device suitable for winding a flexible pipe 10
Figure 2 – Cold bend test apparatus 11
Figure 3 – Impact test apparatus 12

Documents
Document Sharing Hub
Full document details: IEC 60598-2-21 2014

Table 1 – Mass of hammer 12
Table 2 – Cables for rope lights 13

Documents
Document Sharing Hub

Full document details: IEC 60598-2-21 2014

INTERNATIONAL ELECTROTECHNICAL COMMISSION

LUMINAIRES –

Part 2-21: Particular requirements – Rope lights

FOREWORD

1) The International Electrotechnical Commission (IEC) is a worldwide organization for standardization comprising all national electrotechnical committees (IEC National Committees). The object of IEC is to promote international co-operation on all questions concerning standardization in the electrical and electronic fields. To this end and in addition to other activities, IEC publishes International Standards, Technical Specifications, Technical Reports, Publicly Available Specifications (PAS) and Guides (hereafter referred to as "IEC Publication(s)"). Their preparation is entrusted to technical committees; any IEC National Committee interested in the subject dealt with may participate in this preparatory work. International, governmental and non-governmental organizations liaising with the IEC also participate in this preparation. IEC collaborates closely with the International Organization for Standardization (ISO) in accordance with conditions determined by agreement between the two organizations.
2) The formal decisions or agreements of IEC on technical matters express, as nearly as possible, an international consensus of opinion on the relevant subjects since each technical committee has representation from all interested IEC National Committees.
3) IEC Publications have the form of recommendations for international use and are accepted by IEC National Committees in that sense. While all reasonable efforts are made to ensure that the technical content of IEC Publications is accurate, IEC cannot be held responsible for the way in which they are used or for any misinterpretation by any end user.
4) In order to promote international uniformity, IEC National Committees undertake to apply IEC Publications transparently to the maximum extent possible in their national and regional publications. Any divergence between any IEC Publication and the corresponding national or regional publication shall be clearly indicated in the latter.
5) IEC itself does not provide any attestation of conformity. Independent certification bodies provide conformity assessment services and, in some areas, access to IEC marks of conformity. IEC is not responsible for any services carried out by independent certification bodies.
6) All users should ensure that they have the latest edition of this publication.
7) No liability shall attach to IEC or its directors, employees, servants or agents including individual experts and members of its technical committees and IEC National Committees for any personal injury, property damage or other damage of any nature whatsoever, whether direct or indirect, or for costs (including legal fees) and expenses arising out of the publication, use of, or reliance upon, this IEC Publication or any other IEC Publications.
8) Attention is drawn to the Normative references cited in this publication. Use of the referenced publications is indispensable for the correct application of this publication.
9) Attention is drawn to the possibility that some of the elements of this IEC Publication may be the subject of patent rights. IEC shall not be held responsible for identifying any or all such patent rights.

International Standard IEC 60598-2-21 has been prepared by subcommittee 34D: Luminaires, of IEC technical committee 34: Lamps and related equipment.

The text of this standard is based on the following documents:

FDIS	Report on voting
34D/1146/FDIS	34D/1154/RVD

Full information on the voting for the approval of this standard can be found in the report on voting indicated in the above table.

This publication has been drafted in accordance with the ISO/IEC Directives, Part 2.

Documents
Document Sharing Hub

Full document details: IEC 60598-2-21 2014

This standard is intended to be read in conjunction with IEC 60598-1 Luminaires – Part 1: General requirements and tests.

A list of all the parts in the IEC 60598 series, published under the general title *Luminaires* can be found on the IEC website.

In this standard, the following print types are used:

– requirements: in roman type;
– *test specifications: in italic type;*
– notes: in small roman type.

The committee has decided that the contents of this publication will remain unchanged until the stability date indicated on the IEC web site under "http://webstore.iec.ch" in the data related to the specific publication. At this date, the publication will be

- reconfirmed,
- withdrawn,
- replaced by a revised edition, or
- amended.

The contents of the Corrigendum 1of December 2016 have been included in this copy.

Documents
Document Sharing Hub

Full document details: IEC 60598-2-21 2014

LUMINAIRES –

Part 2-21: Particular requirements – Rope lights

21.1 Scope

This part of IEC 60598 specifies requirements for rope lights (sealed lighting chains) fitted with non-replaceable series- or parallel- or a combination of series/parallel-connected light sources for use either indoors or outdoors on supply voltages not exceeding 250 V.

NOTE 1 In some countries the term “sealed lighting chain” is used instead of "rope light".

NOTE 2 For products where the rope light is fixed to a frame or the like as ornaments like Santa Claus, snowman and similar, relevant clauses of IEC 60598-2-4 and/or IEC 60598-2-7 can also apply.

Rope lights provided with, fixed or detachable, extra attachments of different kinds, e.g. ornamental element in temporary decorative configurations due to festivals, celebrations, etc. or in two or three dimensional reproductions of persons or animals (real or imaginary) are considered to be covered by this standard.

21.2 Normative references

The following documents, in whole or in part, are normatively referenced in this document and are indispensable for its application. For dated references, only the edition cited applies. For undated references, the latest edition of the referenced document (including any amendments) applies.

IEC 60227-5:2011, *Polyvinyl chloride insulated cables of rated voltages up to and including 450/750 V – Part 5: Flexible cables (cords)*

IEC 60245-4:2011, *Rubber insulated cables – Rated voltages up to and including 450/750 V – Part 4: Cords and flexible cables*

IEC 60320 (all parts), *Appliance couplers for household and similar general purposes*

IEC 60529, *Degrees of protection provided by enclosures (IP Code)*

IEC 60598-1, *Luminaires – Part 1: General requirements and tests*

IEC 60811-504:2012, *Electric and optical fibre cables – Test methods for non-metallic materials – Part 504: Mechanical tests – Bending tests at low temperature for insulation and sheaths*

IEC 60811-506:2012, *Electric and optical fibre cables – Test methods for non-metallic materials – Part 506: Mechanical tests – Impact test at low temperature for insulations and sheaths*

IEC 60811-508:2012, *Electric and optical fibre cables – Test methods for non-metallic materials – Part 508: Mechanical tests – Pressure test at high temperature for insulation and sheaths*

IEC 60906 (all parts), *IEC system of plugs and socket-outlets for household and similar purposes*

Documents
Document Sharing Hub
Full document details: IEC 60598-2-21 2014

IEC 61347-2-11, *Lamp controlgear – Part 2-11: Particular requirements for miscellaneous electronic circuits used with luminaires*

IEC 61347-2-13, *Lamp controlgear – Part 2-13: Particular requirements for d.c. or a.c. supplied electronic controlgear for LED modules*

IEC 61984:2008, *Connectors – Safety requirements and tests*

ISO 4064-4:2002, *Paper, board, pulps and related terms – Vocabulary – Part 4: paper and board grades and converted products*

21.3 Terms and definitions

For the purpose of this document, the terms and definitions given in IEC 60598-1 as well as the following apply.

21.3.1
lighting chain
luminaire comprising an assembly of series-connected lampholders, parallel-connected lampholders or series/parallel-connected lampholders and interconnecting insulated conductors

[SOURCE: IEC 60598-2-20:2010, 20.4.1]

21.3.2
rope light
sealed lighting chain
lighting chain with non-replaceable light sources enclosed in a rigid or flexible insulating translucent pipe or tube, sealed at the ends, with or without joints

Note 1 to entry: A rope light may incorporate control devices (e.g. flasher units, see 21.7.4).

21.4 General test requirements

The provisions of Section 0 of IEC 60598-1 apply. The tests described in each appropriate section of IEC 60598-1 shall be carried out in the order listed in this part of IEC 60598.

21.5 Classification of luminaires

21.5.1 General

Rope lights shall be classified in accordance with the provisions of Section 2 of IEC 60598-1 together with the requirements of 21.5.2 and 21.5.3.

21.5.2 Protection against electric shock

Rope lights shall be classified as Class II or Class III.

21.5.3 Protection against dust, solid objects and moisture

Rope lights for outdoor use shall be classified at least IP 44.

Documents
Document Sharing Hub
Full document details: IEC 60598-2-21 2014

21.6 Marking

21.6.1 General

To provisions of Section 3 of IEC 60598-1 apply together with the requirements of 21.6.2 to 21.6.4.

21.6.2 Rope light marking

The following information shall be marked on the rope light:

– rated voltage of the complete rope light,

– rated wattage of the complete rope light.

Where the information is on the cable, it shall be marked on a durable non-removable sleeve or label.

21.6.3 Rope light and packing marking

The following marking shall be placed on the rope light and on the accompanying packing of rope lights for indoor use only.

– “FOR INDOOR USE ONLY”

– As an alternative to the text, the rope light can be marked with the symbol [SOURCE: IEC 60417-5957 (2004-12)]. The symbol shall be explained in the instructions.

21.6.4 Packing or instruction marking

The following or similar marking shall be placed on the accompanying packing or instructions.

a) For all rope lights where the packing has not been adapted for display purposes:
   – “Do not connect the rope light to the supply while it is in the packing or wound onto a reel”;
   – “Do not use the rope light when covered or recessed into a surface”;
   – minimum allowed bending radius, if applicable;
   – “Do not open or cut the rope light”.

b) For rope lights which rely on gaskets to provide the specified degree of protection against dust, solid objects and moisture:
   – “WARNING – THIS ROPE LIGHT MUST NOT BE USED WITHOUT ALL GASKETS BEING IN PLACE”.

c) For rope lights intended for interconnection:
   – “Do not connect this rope light to another manufacturer’s product”;
   – “Interconnection shall be made only by the use of the supplied connectors. Any open ends must be sealed-off before use”;
   – maximum system length that may be interconnected;
   – maximum wattage that may be interconnected.

d) For rope lights incorporating lamp bridging device(s):
   – information stating that the rope light is fitted with a bridging device(s).

e) For class III rope lights delivered without a supply source:
   – relevant information concerning the required supply source.

Documents
Document Sharing Hub
Full document details: IEC 60598-2-21 2014

21.7 Construction

21.7.1 General

The provisions of Section 4 of IEC 60598-1 apply together with the requirements of 21.7.2 to 21.7.5.

21.7.2 Terminal blocks

Clause 4.6 of Section 4 of IEC 60598-1 referring to terminal block does not apply.

21.7.3 Terminals and supply connections

Clause 4.7 of Section 4 of IEC 60598-1 referring to terminals and supply connections applies together with the following requirement.

Interconnecting connectors for rope lights shall, in addition, comply with the requirements and modifications given in Annex A

Compliance is checked by inspection and by carrying out the tests of this standard.

21.7.4 Control units

Control units and similar devices forming an integral part of the rope light shall be enclosed in non-flammable insulating material. In addition they shall be securely fixed to the rope light or the cable.

Compliance shall be checked by inspection and, for the non-flammability of the insulating material, by the tests of Clause 21.16.

Any electronic control device (e.g. flasher units) shall, in addition to the requirements of this standard, comply with the requirements of IEC 61347-2-11.

LED-drivers shall comply with the requirements of IEC 61347-2-13.

Compliance shall be checked by carrying out the relevant tests.

21.7.5 Mechanical strength

Rope lights shall have adequate mechanical strength.

Compliance is checked by the following tests:

a) For rigid rope lights, compliance is checked by subjecting the pipe to each of the following tests carried out in turn.

   1) A pull of 60 N, the stress being applied to the ends of the pipe, 45 times without jerks, each time for 1 s.

   2) A torque of 0,15 Nm, the stress being applied to the ends of the pipe in the most unfavorable direction (alternatively in cases of doubt) without jerks for 1 min.

   During and after the above test tests, the conductors shall not have moved noticeably in the terminals and the pipe shall not be damaged.

b) For flexible rope lights, compliance is checked by the tests of 1) and 2) above followed by the additional tests 3) and 4) below.

   3) Wind the pipe in full test length (1 m) on a cylinder of 150 mm diameter with a pull of 60 N for the number of operations and at the ambient temperature given below:

Documents
Document Sharing Hub

Full document details: IEC 60598-2-21 2014

– for rope lights having an IP number 20
  10 times at 25 °C ± 2 °C
– for rope lights having an IP number over X0
  10 times at 25 °C ± 2 °C followed by 10 times at –15 °C ± 2 °C

Before the low temperature tests the pipe is kept for 16 h in the low temperature cabinet at a temperature of –15 °C ± 2 °C.

NOTE 1 An example of a test device suitable for winding a flexible pipe is given in Figure 1

Dimensions in millimetres

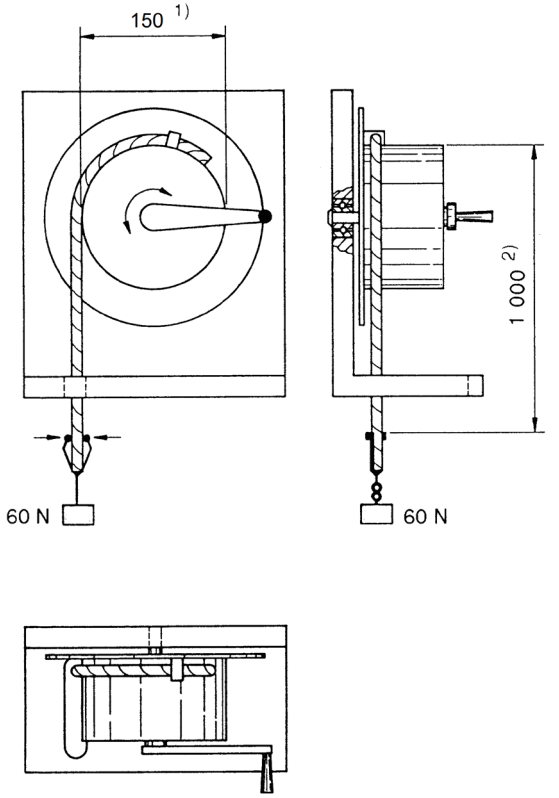

Key

1) Diameter of wooden cylinder.

2) Distance between the fixing point of the flexible pipe and the weight prior to commencement of the test.

Figure 1 – Example of test device suitable for winding a flexible pipe

4) After test 3), with the test specimen at room temperature, the pipe is wound on a mandrel of between 4 and 5 times the diameter of the test piece and then is placed in the low temperature cabinet (-15 °C ± 2 °C) for 16 h.

   After this time period the sample is wound around the mandrel for two turns in the cabinet.

   There shall be no cracks.

   NOTE 2 An example of a test apparatus suitable for winding a flexible pipe is given in Figure 2 (corresponding to Figure 1 in IEC 60811-504:2012).

Documents
Document Sharing Hub
Full document details: IEC 60598-2-21 2014