IEC 60601-2-2

Edition 6.0 2017-03
REDLINE VERSION

INTERNATIONAL STANDARD

colour inside

Medical electrical equipment –
Part 2-2: Particular requirements for the basic safety and essential performance of high frequency surgical equipment and high frequency surgical accessories

IEC 60601-2-2:2017-03 RLV(en)

Documents
Document Sharing Hub

Full document details: IEC 60601-2-2 2017 RLV

THIS PUBLICATION IS COPYRIGHT PROTECTED

Copyright © 2017 IEC, Geneva, Switzerland

All rights reserved. Unless otherwise specified, no part of this publication may be reproduced or utilized in any form or by any means, electronic or mechanical, including photocopying and microfilm, without permission in writing from either IEC or IEC's member National Committee in the country of the requester. If you have any questions about IEC copyright or have an enquiry about obtaining additional rights to this publication, please contact the address below or your local IEC member National Committee for further information.

IEC Central Office
3, rue de Varembé
CH-1211 Geneva 20
Switzerland

Tel.: +41 22 919 02 11
Fax: +41 22 919 03 00
info@iec.ch
www.iec.ch

About the IEC
The International Electrotechnical Commission (IEC) is the leading global organization that prepares and publishes International Standards for all electrical, electronic and related technologies.

About IEC publications
The technical content of IEC publications is kept under constant review by the IEC. Please make sure that you have the latest edition, a corrigenda or an amendment might have been published.

IEC Catalogue - webstore.iec.ch/catalogue
The stand-alone application for consulting the entire bibliographical information on IEC International Standards, Technical Specifications, Technical Reports and other documents. Available for PC, Mac OS, Android Tablets and iPad.

IEC publications search - www.iec.ch/searchpub
The advanced search enables to find IEC publications by a variety of criteria (reference number, text, technical committee,…). It also gives information on projects, replaced and withdrawn publications.

IEC Just Published - webstore.iec.ch/justpublished
Stay up to date on all new IEC publications. Just Published details all new publications released. Available online and also once a month by email.

Electropedia - www.electropedia.org
The world's leading online dictionary of electronic and electrical terms containing 20 000 terms and definitions in English and French, with equivalent terms in 16 additional languages. Also known as the International Electrotechnical Vocabulary (IEV) online.

IEC Glossary - std.iec.ch/glossary
65 000 electrotechnical terminology entries in English and French extracted from the Terms and Definitions clause of IEC publications issued since 2002. Some entries have been collected from earlier publications of IEC TC 37, 77, 86 and CISPR.

IEC Customer Service Centre - webstore.iec.ch/csc
If you wish to give us your feedback on this publication or need further assistance, please contact the Customer Service Centre: csc@iec.ch.

Documents
Document Sharing Hub

Full document details: IEC 60601-2-2 2017 RLV

IEC 60601-2-2

Edition 6.0 2017-03
REDLINE VERSION

INTERNATIONAL STANDARD

colour inside

Medical electrical equipment –
Part 2-2: Particular requirements for the basic safety and essential performance of high frequency surgical equipment and high frequency surgical accessories

INTERNATIONAL
ELECTROTECHNICAL
COMMISSION

ICS 11.040.30

ISBN 978-2-8322-4185-1

Warning! Make sure that you obtained this publication from an authorized distributor.

® Registered trademark of the International Electrotechnical Commission

Documents
Document Sharing Hub

Full document details: IEC 60601-2-2 2017 RLV

CONTENTS

FOREWORD 4
INTRODUCTION 7
201.1 Scope, object and related standards 8
201.2 Normative references 9
201.3 Terms and definitions 10
201.4 General requirements 14
201.5 General requirements for testing of ME EQUIPMENT 15
201.6 Classification of ME EQUIPMENT and ME SYSTEMS 16
201.7 ME EQUIPMENT identification, marking and documents 16
201.8 Protection against electrical HAZARDS from ME EQUIPMENT 21
201.9 Protection against MECHANICAL HAZARDS of ME EQUIPMENT and ME SYSTEMS 36
201.10 Protection against unwanted and excessive radiation HAZARDS 36
201.11 Protection against excessive temperatures and other HAZARDS 37
201.12 Accuracy of controls and instruments and protection against hazardous outputs 38
201.13 HAZARDOUS SITUATIONS and fault conditions for ME EQUIPMENT 45
201.14 PROGRAMMABLE ELECTRICAL MEDICAL SYSTEMS (PEMS) 45
201.15 Construction of ME EQUIPMENT 45
201.16 ME SYSTEMS 50
201.17 Electromagnetic compatibility of ME EQUIPMENT and ME SYSTEMS 50
202 * ELECTROMAGNETIC ~~compatibility~~ DISTURBANCES – Requirements and tests 50
208 General requirements, tests and guidance for alarm systems in medical electrical equipment and medical electrical systems 51
Annexes 53
Annex AA (informative) Particular guidance and rationale 54
Annex BB (informative) ELECTROMAGNETIC DISTURBANCES created by HF SURGICAL EQUIPMENT 81
Bibliography 90
Index of defined terms used in this particular standard 92

Figure 201.101 – Symbol used with an EARTH REFERENCED PATIENT CIRCUIT 16
Figure 201.102 – Symbol used with a HF ISOLATED PATIENT CIRCUIT 16
Figure 201.103 – Circuit suitable for testing compliance to 201.8.4.101 22
Figure 201.104 – Measurement of HF LEAKAGE CURRENT ~~with NEUTRAL ELECTRODE referenced to earth~~ for EARTH REFERENCED PATIENT CIRCUITS and load between electrodes 25
Figure 201.105 – Measurement of HF LEAKAGE CURRENT ~~WITH NEUTRAL ELECTRODE REFERENCED TO EARTH~~ for EARTH REFERENCED PATIENT CIRCUITS and a load resistance from ACTIVE ELECTRODE to earth 26
Figure 201.106 – Measurement of HF LEAKAGE CURRENT ~~with NEUTRAL ELECTRODE isolated from earth at high frequency~~ for HF ISOLATED PATIENT CIRCUITS 27
Figure 201.107 – Measurement of HF LEAKAGE CURRENT from a BIPOLAR ~~ELECTRODE~~ ACCESSORY 28
Figure 201.108 – Test apparatus for anchorages of cords of ACTIVE ACCESSORY 33

AVA Documents
Document Sharing Hub
Full document details: IEC 60601-2-2 2017 RLV

Figure 201.109 – Measurement of output power – MONOPOLAR output 40
Figure 201.110 – Measurement of output power – BIPOLAR output 41
Figure 201.111 – Method of testing feedback from one active output to another in simultaneous activation 44
Figure AA.1 – Examples of various parts of an HF surgical ME SYSTEM 56
Figure AA.2 – Example of MONOPOLAR method of HF surgery using a NEUTRAL ELECTRODE 56
Figure AA.3 – Example of BIPOLAR method of HF surgery 57
Figure AA.4 – CREST FACTOR vs. peak voltage 62
Figure AA.5 – Example of PATIENT circuit with NEUTRAL ELECTRODE referenced to earth at operating frequencies 66
Figure BB.1 – E-FIELD EMISSIONS test setup 84
Figure BB.2 – H-FIELD EMISSIONS test setup 85
Figure BB.3 – Conducted EMISSIONS test setup 86
Figure BB.4 – Unit ad hoc test 88
Figure BB.5 – Power cord ad hoc test 89
Figure BB.6 – ACCESSORY cord ad hoc test 89

Table 201.101 – Colours of indicator lights and their meaning for HF SURGICAL EQUIPMENT 17
Table 201.102 – Maximum output powers in SINGLE FAULT CONDITIONS 43
Table 201.103 – Test currents by weight range 47
Table AA.1 – Summary of measured current and durations for 25 TUR procedures 75
Table AA.2 – Summary of measured currents and durations for general surgical procedures 76
Table BB.1 – Worst case EMISSIONS of spark gap type HF SURGICAL EQUIPMENT 86
Table BB.2 – Worst case EMISSIONS of non-spark gap (modern) HF SURGICAL EQUIPMENT 86

Documents
Document Sharing Hub
Full document details: IEC 60601-2-2 2017 RLV

INTERNATIONAL ELECTROTECHNICAL COMMISSION

_____

MEDICAL ELECTRICAL EQUIPMENT –

Part 2-2: Particular requirements for the basic safety and essential performance of high frequency surgical equipment and high frequency surgical accessories

FOREWORD

1) The International Electrotechnical Commission (IEC) is a worldwide organization for standardization comprising all national electrotechnical committees (IEC National Committees). The object of IEC is to promote international co-operation on all questions concerning standardization in the electrical and electronic fields. To this end and in addition to other activities, IEC publishes International Standards, Technical Specifications, Technical Reports, Publicly Available Specifications (PAS) and Guides (hereafter referred to as "IEC Publication(s)"). Their preparation is entrusted to technical committees; any IEC National Committee interested in the subject dealt with may participate in this preparatory work. International, governmental and non-governmental organizations liaising with the IEC also participate in this preparation. IEC collaborates closely with the International Organization for Standardization (ISO) in accordance with conditions determined by agreement between the two organizations.
2) The formal decisions or agreements of IEC on technical matters express, as nearly as possible, an international consensus of opinion on the relevant subjects since each technical committee has representation from all interested IEC National Committees.
3) IEC Publications have the form of recommendations for international use and are accepted by IEC National Committees in that sense. While all reasonable efforts are made to ensure that the technical content of IEC Publications is accurate, IEC cannot be held responsible for the way in which they are used or for any misinterpretation by any end user.
4) In order to promote international uniformity, IEC National Committees undertake to apply IEC Publications transparently to the maximum extent possible in their national and regional publications. Any divergence between any IEC Publication and the corresponding national or regional publication shall be clearly indicated in the latter.
5) IEC provides no marking procedure to indicate its approval and cannot be rendered responsible for any equipment declared to be in conformity with an IEC Publication.
6) All users should ensure that they have the latest edition of this publication.
7) No liability shall attach to IEC or its directors, employees, servants or agents including individual experts and members of its technical committees and IEC National Committees for any personal injury, property damage or other damage of any nature whatsoever, whether direct or indirect, or for costs (including legal fees) and expenses arising out of the publication, use of, or reliance upon, this IEC Publication or any other IEC Publications.
8) Attention is drawn to the Normative references cited in this publication. Use of the referenced publications is indispensable for the correct application of this publication.
9) Attention is drawn to the possibility that some of the elements of this IEC Publication may be the subject of patent rights. IEC shall not be held responsible for identifying any or all such patent rights.

This redline version of the official IEC Standard allows the user to identify the changes made to the previous edition. A vertical bar appears in the margin wherever a change has been made. Additions are in green text, deletions are in strikethrough red text.

Documents
Document Sharing Hub

Full document details: IEC 60601-2-2 2017 RLV

International standard IEC 60601-2-2 has been prepared by IEC subcommittee 62D: Electromedical equipment, of IEC technical committee 62: Electrical equipment in medical practice.

This sixth edition cancels and replaces the fifth edition published in 2009. This edition constitutes a technical revision. This edition includes the following significant technical changes with respect to the previous edition:

– refinement and additions to the defined terms;
– additional separation of the requirements for HF surgical equipment and HF surgical accessories;
– a new requirement for adult neutral electrodes to be contact quality monitoring neutral electrodes;
– new requirements for devices that have or use a high current mode.

The text of this particular standard is based on the following documents:

FDIS	Report on voting
62D/1427/FDIS	62D/1442/RVD

Full information on the voting for the approval of this particular standard can be found in the report on voting indicated in the above table.

This publication has been drafted in accordance with the ISO/IEC Directives, Part 2.

In this standard, the following print types are used:

– requirements and definitions: roman type;
– *test specifications: italic type;*
– informative material appearing outside of tables, such as notes, examples and references: in smaller type. Normative text of tables is also in a smaller type;
– TERMS DEFINED IN CLAUSE 3 OF THE GENERAL STANDARD, IN THIS PARTICULAR STANDARD OR AS NOTED: SMALL CAPITALS.

In referring to the structure of this standard, the term

– “clause” means one of the seventeen numbered divisions within the table of contents, inclusive of all subdivisions (e.g. Clause 7 includes subclauses 7.1, 7.2, etc.);
– “subclause” means a numbered subdivision of a clause (e.g. 7.1, 7.2 and 7.2.1 are all subclauses of Clause 7).

References to clauses within this standard are preceded by the term “Clause” followed by the clause number. References to subclauses within this standard are by number only.

In this standard, the conjunctive “or” is used as an “inclusive or” so a statement is true if any combination of the conditions is true.

The verbal forms used in this standard conform to usage described in Clause 7 of the ISO/IEC Directives, Part 2. For the purposes of this standard, the auxiliary verb:

– “shall” means that compliance with a requirement or a test is mandatory for compliance with this standard;
– “should” means that compliance with a requirement or a test is recommended but is not mandatory for compliance with this standard;

AVA Documents
Document Sharing Hub

Full document details: IEC 60601-2-2 2017 RLV

– “may” is used to describe a permissible way to achieve compliance with a requirement or test.

An asterisk (*) as the first character of a title or at the beginning of a paragraph or table title indicates that there is guidance or rationale related to that item in Annex AA.

A list of all parts of the IEC 60601 series, published under the general title *Medical electrical equipment,* can be found on the IEC website.

The committee has decided that the contents of this publication will remain unchanged until the stability date indicated on the IEC website under "http://webstore.iec.ch" in the data related to the specific publication. At this date, the publication will be

- reconfirmed,
- withdrawn,
- replaced by a revised edition, or
- amended.

IMPORTANT – The “colour inside” logo on the cover page of this publication indicates that it contains colours which are considered to be useful for the correct understanding of its contents. Users should therefore print this publication using a colour printer.

Documents
Document Sharing Hub

Full document details: IEC 60601-2-2 2017 RLV

INTRODUCTION

The minimum safety requirements specified in this particular standard are considered to provide for a practical degree of safety in the operation of HIGH FREQUENCY SURGICAL EQUIPMENT.

This particular standard amends and supplements IEC 60601-1:2005 and Amendment 1:2012, *Medical electrical equipment – Part 1: General requirements for basic safety and essential performance*, hereinafter referred to as the general standard (see 201.1.4).

The requirements are followed by specifications for the relevant tests.

A "Particular guidance and rationale" section giving some explanatory notes, where appropriate, about the more important requirements is included in Annex AA.

Clauses or subclauses for which there are explanatory notes in Annex AA are marked with an asterisk (*).

It is considered that a knowledge of the reasons for these requirements will not only facilitate the proper application of the standard but will, in due course, expedite any revision necessitated by changes in clinical practice or as a result of developments in technology. However, this annex does not form part of the requirements of this document.

AVA Documents
Document Sharing Hub

Full document details: IEC 60601-2-2 2017 RLV

MEDICAL ELECTRICAL EQUIPMENT –

Part 2-2: Particular requirements for the basic safety and essential performance of high frequency surgical equipment and high frequency surgical accessories

201.1 Scope, object and related standards

Clause 1 of the general standard[1] applies, except as follows:

201.1.1 * Scope

Replacement:

This part of IEC 60601 applies to the BASIC SAFETY and ESSENTIAL PERFORMANCE of HF SURGICAL EQUIPMENT and HF SURGICAL ACCESSORIES as defined in 201.3.224 and 201.3.223.

HF SURGICAL EQUIPMENT having a RATED OUTPUT POWER not exceeding 50 W (for example for micro-COAGULATION, or for use in dentistry or ophthalmology) is exempt from certain of the requirements of this particular standard. These exemptions are indicated in the relevant requirements.

201.1.2 Object

Replacement:

The object of this particular standard is to establish particular BASIC SAFETY and ESSENTIAL PERFORMANCE requirements for HF SURGICAL EQUIPMENT and HF SURGICAL ACCESSORIES as defined in 201.3.224 and 201.3.223.

201.1.3 Collateral standards

Addition:

This particular standard refers to those applicable collateral standards that are listed in Clause 2 of the general standard and Clause 201.2 of this particular standard.

IEC 60601-1-2:2014 and IEC 60601-1-8:2006 apply as modified in Clauses 202 and 208 respectively. IEC 60601-1-3, IEC 60601-1-10 and IEC 60601-1-11[2] do not apply. All other published collateral standards in the IEC 60601-1 series apply as published.

201.1.4 Particular standards

Replacement:

In the IEC 60601 series, particular standards may modify, replace or delete requirements contained in the general standard and collateral standards as appropriate for the particular

---

[1] The general standard is IEC 60601-1:2005/AMD1:2012, *Medical electrical equipment – Part 1: General requirements for basic safety and essential performance*.

[2] ~~IEC 60601-1-11, *Medical electrical equipment – Part 1-11: General requirements for basic safety and essential performance – Collateral Standard: Requirements for medical electrical equipment and medical electrical systems used in the home healthcare environment* (in preparation).~~

AVA Documents Document Sharing Hub

Full document details: IEC 60601-2-2 2017 RLV

ME EQUIPMENT under consideration, and may add other BASIC SAFETY and ESSENTIAL PERFORMANCE requirements.

A requirement of a particular standard takes priority over the general standard.

For brevity, IEC 60601-1 is referred to in this particular standard as the general standard. Collateral standards are referred to by their document number.

The numbering of clauses and subclauses of this particular standard corresponds to that of the general standard with the prefix “201” (e.g. 201.1 in this document addresses the content of Clause 1 of the general standard) or applicable collateral standard with the prefix “20x” where x is the final digit(s) of the collateral standard document number (e.g. 202.4 in this particular standard addresses the content of Clause 4 of the IEC 60601-1-2 collateral standard, 203.4 in this particular standard addresses the content of Clause 4 of the IEC 60601-1-3 collateral standard, etc.). The changes to the text of the general standard are specified by the use of the following words:

"*Replacement*" means that the clause or subclause of the general standard or applicable collateral standard is replaced completely by the text of this particular standard.

"*Addition*" means that the text of this particular standard is additional to the requirements of the general standard or applicable collateral standard.

"*Amendment*" means that the clause or subclause of the general standard or applicable collateral standard is amended as indicated by the text of this particular standard.

Subclauses, figures or tables which are additional to those of the general standard are numbered starting from 201.101. However, due to the fact that definitions in the general standard are numbered 3.1 through 3.147, additional definitions in this document are numbered beginning from 201.3.201. Additional annexes are lettered AA, BB, etc., and additional items aa), bb), etc.

Subclauses, figures or tables which are additional to those of a collateral standard are numbered starting from 20x, where “x” is the number of the collateral standard, e.g. 202 for IEC 60601-1-2, 203 for IEC 60601-1-3, etc.

The term "this document" is used to make reference to the general standard, any applicable collateral standards and this particular standard taken together.

Where there is no corresponding clause or subclause in this particular standard, the clause or subclause of the general standard or applicable collateral standard, although possibly not relevant, applies without modification; where it is intended that any part of the general standard or applicable collateral standard, although possibly relevant, is not to be applied, a statement to that effect is given in this particular standard.

201.2 Normative references

NOTE Informative references are listed in the bibliography beginning on page 87.

Clause 2 of the general standard applies, except as follows:

Replacement:

IEC 60601-1-2:~~2007~~ 2014, *Medical electrical equipment – Part 1-2: General requirements for basic safety and essential performance – Collateral Standard: Electromagnetic~~ compatibility~~ disturbances – Requirements and tests*

Documents
Document Sharing Hub

Full document details: IEC 60601-2-2 2017 RLV

IEC 60601-1-8:2006, *Medical electrical equipment – Part 1-8: General requirements for basic safety and essential performance – Collateral Standard: General requirements, tests and guidance for alarm systems in medical electrical equipment and medical electrical systems*

Addition:

CISPR 11:~~2003~~ 2015, *Industrial, scientific and medical equipment – Radio-frequency ~~equipment – Electromagnetic~~ disturbance characteristics – Limits and methods of measurement*

IEC 61000-4-3:2006, *Electromagnetic compatibility (EMC) – Part 4-3: Testing and measurement techniques – Radiated, radio-frequency electromagnetic field immunity test*

IEC 61000-4-6:~~2003~~ 2013, *Electromagnetic compatibility (EMC) – Part 4-6: Testing and measurement techniques – Immunity to conducted disturbances, induced by radio-frequency fields*

201.3 Terms and definitions

For the purposes of this document, the terms and definitions given in IEC 60601-1~~:2005~~ and the following apply~~, except as follows:~~

ISO and IEC maintain terminological databases for use in standardization at the following addresses:

- IEC Electropedia: available at http://www.electropedia.org/
- ISO Online browsing platform: available at http://www.iso.org/obp

Replace NOTE 1 with the following:

NOTE 1 Where the terms “voltage” and “current” are used in this document, they mean the RMS values of an alternating, direct or composite voltage or current averaged over 1 s unless stated otherwise.

Addition:

201.3.201
ACTIVE ACCESSORY
HF SURGICAL ACCESSORY intended for manipulation by the OPERATOR to produce ~~surgical~~ an effect by electrical conduction adjacent to the ACTIVE ELECTRODE at the intended site on the PATIENT, generally comprising an ACTIVE HANDLE, the cord of an ACTIVE ACCESSORY, ACTIVE CONNECTOR and ACTIVE ELECTRODE

201.3.202
ACTIVE CONNECTOR
part of an ACTIVE ACCESSORY intended for connection to an ACTIVE OUTPUT TERMINAL, which may include additional terminals for connection of a FINGERSWITCH to a SWITCH SENSOR

201.3.203
ACTIVE ELECTRODE
part of an ACTIVE ACCESSORY extending from the ACTIVE HANDLE to the surgical site and intended to pass HF current into body tissue

201.3.204
ACTIVE ELECTRODE INSULATION
electrical insulation material affixed to part of an ACTIVE ELECTRODE intended to prevent unintended injury to ~~adjacent~~ PATIENT tissue or the OPERATOR

AVA Documents Document Sharing Hub

Full document details: IEC 60601-2-2 2017 RLV

201.3.205
ACTIVE HANDLE
part of an ACTIVE ACCESSORY intended to be held by the OPERATOR

201.3.206
ACTIVE OUTPUT TERMINAL
part of HF SURGICAL EQUIPMENT or ASSOCIATED EQUIPMENT intended for connection to an ACTIVE ACCESSORY and for delivery of HF current thereto

Note 1 to entry: An ACTIVE CONNECTOR is that which plugs into an ACTIVE OUTPUT TERMINAL.

Note 2 to entry: See Figure AA.1.

201.3.207
***ASSOCIATED EQUIPMENT**
MEDICAL ELECTRICAL EQUIPMENT other than HF SURGICAL EQUIPMENT that may be electrically connected to the PATIENT circuit~~ and not intended for independent use~~

201.3.208
***BIPOLAR**
method of applying HF~~ output~~ current to a PATIENT~~ via multiple pole~~ between two or more ACTIVE ELECTRODES without the need for a separately connected NEUTRAL ELECTRODE (or the need to use the PATIENT'S body capacitance to earth) in which an effect is intended in tissue near one or more ACTIVE ELECTRODES

Note 1 to entry: The BIPOLAR method includes devices energizing pairs of ACTIVE ELECTRODES as well as devices energizing groups of ACTIVE ELECTRODES where the HF current source and return may have different numbers of electrodes.

Note 2 to entry: See Figure AA.1 and Figure AA.3.

201.3.209
BIPOLAR~~ ELECTRODE~~ ACCESSORY
~~assembly of~~ ACTIVE ACCESSORY comprising two or more ACTIVE ELECTRODES on the same support, so constructed that, when energized, the HF current flows mainly amongst these electrodes

201.3.210
COAGULATION
use of HF current to~~ elevate the temperature of tissue, e.g. to reduce or terminate undesired bleeding~~ induce a thermal effect, e.g. to control or prevent bleeding, induce tissue destruction, or induce tissue shrinkage

Note 1 to entry: COAGULATION may take the form of contact or non-contact COAGULATION.

Note 2 to entry: FULGURATION, desiccation, spray, forced, swift, soft and argon beam (plasma) COAGULATION are all names of COAGULATION types.

201.3.211
CONTACT QUALITY MONITOR
CQM
circuit in HF SURGICAL EQUIPMENT or ASSOCIATED EQUIPMENT intended for connection to a MONITORING NE providing an alarm in the event that NEUTRAL ELECTRODE (NE) contact with the PATIENT becomes insufficient

Note 1 to entry: CONTACT QUALITY MONITOR is functional only when used with a MONITORING NE.

201.3.212
CONTINUITY MONITOR
circuit in HF SURGICAL EQUIPMENT or ASSOCIATED EQUIPMENT intended for connection to an NE~~, except MONITORING NE,~~ providing an alarm in the event of electrical discontinuity in the NE cable or its connections

AVA Documents
Document Sharing Hub
Full document details: IEC 60601-2-2 2017 RLV

201.3.213
***CREST FACTOR**
dimensionless value equal to the peak output voltage divided by the RMS voltage as measured at the output of HF SURGICAL EQUIPMENT in an open circuit condition

Note 1 to entry: Specific information on the correct way to make the measurements needed to calculate this value may be found in Annex AA.

201.3.214
***CUTTING**
~~resection or dissection~~ division of body tissue caused by the passage of HIGH FREQUENCY current of high current density at the ACTIVE ELECTRODE (S)

201.3.215
***EARTH REFERENCED PATIENT CIRCUIT**
PATIENT circuit which includes components, such as capacitors, installed to provide a low-impedance path to earth for HF currents

201.3.216
FINGERSWITCH
device generally included with an ACTIVE ACCESSORY which, when manipulated by the OPERATOR, enables HF output to be produced and, when released disables HF output

Note 1 to entry: Requirements for similar switches intended to perform functions other than activation of HF output are under consideration.

201.3.217
***FULGURATION**
~~form of COAGULATION using long (0,5 mm or more) electrical sparks to heat tissue surfaces superficially, with no intentional mechanical contact between the ACTIVE ELECTRODE and the tissue~~ the use of HF current to produce an effect on a tissue surface by electrical sparks from an ACTIVE ELECTRODE that is not in physical contact with the tissue

201.3.218
***HEATING FACTOR**
a value equal to $I^2 \times t$ where I is the MONOPOLAR current in amperes and t is the duration of the current flow in s

Note 1 to entry: The HEATING FACTOR is expressed as A^2s (amperes squared seconds).

Note 2 to entry: See subclause 201.15.101.5 in Annex AA for additional information.

201.3.219
***HIGH CURRENT MODE**
MONOPOLAR output mode whose INTENDED USE (MAXIMUM OUTPUT CURRENT and maximum DUTY CYCLE) results in a HEATING FACTOR of greater than 30 A^2s in any 60 s period

201.3.220
***HIGH FREQUENCY**
HF
frequencies less than 5 MHz and generally greater than 200 kHz

201.3.221
HF ISOLATED PATIENT CIRCUIT
HF PATIENT CIRCUIT where there are no components installed to provide a low-impedance path to earth for HF currents

201.3.222
HF PATIENT CIRCUIT
any electrical circuit which contains one or more PATIENT CONNECTIONS including all conductive parts of the HF SURGICAL EQUIPMENT and ASSOCIATED EQUIPMENT circuits through which HF

AVA Documents Document Sharing Hub

Full document details: IEC 60601-2-2 2017 RLV

current is intended to flow between the ME EQUIPMENT and the PATIENT in NORMAL CONDITION or SINGLE FAULT CONDITION

201.3.223
HF SURGICAL ACCESSORY
ACCESSORY intended to conduct, supplement or monitor HF energy applied to the PATIENT from HF SURGICAL EQUIPMENT

Note 1 to entry: HF SURGICAL ACCESSORIES include ~~HF surgical application electrodes~~ ACTIVE ACCESSORIES, including cords and connectors for attachment to HF SURGICAL EQUIPMENT, NEUTRAL ELECTRODES, as well as other ASSOCIATED EQUIPMENT intended for connection to the HF surgical PATIENT circuit. See Figure AA.1.

Note 2 to entry: Not all accessories used with HF surgical equipment are HF surgical accessories.

201.3.224
HF SURGICAL EQUIPMENT
MEDICAL ELECTRICAL EQUIPMENT ~~including associated ACCESSORIES~~ which generates HIGH FREQUENCY currents intended for the performance of surgical ~~operations~~ tasks, such as the CUTTING or COAGULATION of biological tissue by means of these HIGH FREQUENCY currents

Note 1 to entry: HF SURGICAL EQUIPMENT is also variously known as surgical diathermy, electrosurgical equipment, electrosurgical generator, RF generator or HF generator.

Note 2 to entry: A footswitch is an example of an associated ACCESSORY that is part of HF SURGICAL EQUIPMENT. See Figure AA.1.

201.3.225
***HF SURGICAL MODE**
any of a number of OPERATOR selectable HF output characteristics intended to provide a specific ~~indicated surgical~~ effect at a connected ACTIVE ACCESSORY, such as CUTTING, COAGULATION and the like

Note 1 to entry: Each available HF SURGICAL MODE may be provided with an OPERATOR-adjustable output control to set the desired intensity or speed of the ~~surgical~~ effect.

201.3.226
***MAXIMUM OUTPUT CURRENT**
for each available HF SURGICAL MODE, the magnitude of the maximum possible HF output current during INTENDED USE

201.3.227
***MAXIMUM OUTPUT VOLTAGE**
for each available HF SURGICAL MODE, the magnitude of the maximum possible peak HF output voltage appearing between PATIENT circuit connections

201.3.228
***MONITORING NE**
NE intended for use with a CONTACT QUALITY MONITOR

Note 1 to entry: A MONITORING NEUTRAL ELECTRODE is also known as a split plate, dual plate, dual foil electrode or CQM electrode.

201.3.229
***MONOPOLAR**
method of applying HF output current to a PATIENT via an ACTIVE ELECTRODE and returning via a separate~~ly~~ PATIENT-connected NEUTRAL ELECTRODE (or via the PATIENT'S body capacitance to earth) in which an effect is intended only in tissue at or near the ACTIVE ELECTRODE

Note 1 to entry: See Figures AA.1 and AA.2.

Documents
Document Sharing Hub
Full document details: IEC 60601-2-2 2017 RLV

201.3.230
NEUTRAL ELECTRODE
NE
electrode ~~of a relatively large area for connection to the body of the PATIENT,~~ intended to provide an electrical return path for the MONOPOLAR application of HIGH FREQUENCY current with such a low current density in the ~~body~~ PATIENT'S tissue that ~~physical~~ effects such as excessive rise in temperature or unwanted burns are avoided

Note 1 to entry: The NEUTRAL ELECTRODE is also known as plate, plate electrode, electrosurgical pad, passive, return or dispersive electrode.

Note 2 to entry: To keep the current density low enough to prevent unwanted heating, the NEUTRAL ELECTRODE needs to have a large enough area.

Note 3 to entry: A NEUTRAL ELECTRODE is usually in contact with the PATIENT at a location that is separate from the MONOPOLAR ACTIVE ELECTRODE.

Note 4 to entry: See Figures AA.1 and AA.2.

201.3.231.1
RATED ACCESSORY VOLTAGE
<MONOPOLAR HF SURGICAL ACCESSORY> maximum peak HF output voltage which may be applied with respect to an NE connected to the PATIENT

201.3.231.2
RATED ACCESSORY VOLTAGE
<BIPOLAR HF SURGICAL ACCESSORY> maximum peak HF output voltage which may be applied to pairs of opposite polarity

201.3.232
RATED LOAD
value of non-reactive load resistance which, when connected results in the maximum HF output power from each HF SURGICAL MODE of the HF SURGICAL EQUIPMENT

201.3.233
RATED OUTPUT POWER
for each HF SURGICAL MODE set at its maximum output setting, the power in watts produced when all ACTIVE OUTPUT TERMINALS which can be activated simultaneously are connected to their respective RATED LOADS

201.3.234
SWITCH SENSOR
part of HF SURGICAL EQUIPMENT or ASSOCIATED EQUIPMENT which controls activation of HF output in response to operation of a connected FINGERSWITCH or footswitch

201.4 General requirements

Clause 4 of the general standard applies, except as follows:

Additional subclauses:

201.4.1.101 * Additional conditions for application

The compliance of HF SURGICAL EQUIPMENT to this document and the compliance of HF SURGICAL ACCESSORIES to this document shall be independent of each other, except where specifically required by conformance tests or by the MANUFACTURER.

Documents
Document Sharing Hub
Full document details: IEC 60601-2-2 2017 RLV

201.4.2.3.101 * Evaluating RISK ~~MANAGEMENT PROCESS for ME EQUIPMENT or ME SYSTEMS~~

~~*Addition:*~~

MANUFACTURERS shall include, within their RISK ANALYSIS, the potential for their HF SURGICAL EQUIPMENT and/or HF SURGICAL ACCESSORIES to be used in ~~MONOPOLAR~~ HIGH CURRENT MODE ~~situations~~ and the impact this would have on the heating under the NEUTRAL ELECTRODE (for example, see 201.7.9.2.2.101 f)).

201.4.3 * ESSENTIAL PERFORMANCE

Addition:

The requirements listed in the third hyphen of 201.8.4.101 and in 201.12.4.101 shall be considered ESSENTIAL PERFORMANCE requirements.

NOTE 101 Please refer to Annex AA.

201.4.7 SINGLE FAULT CONDITION for ME EQUIPMENT

~~*Addition:*~~

Additional ~~SINGLE FAULT CONDITIONS~~ subclause:

201.4.7.101 Specific SINGLE FAULT CONDITIONS

The following SINGLE FAULT CONDITIONS are the subject of specific requirements and tests in this document:

a) failure in the CONTINUITY MONITOR or CONTACT QUALITY MONITOR which might cause a unacceptable RISK (see 201.8.4.101);

b) a defect in the output switching circuit resulting in an excessive low-frequency PATIENT LEAKAGE CURRENT (see 201.8.10.4.101.1);

c) any defect which results in the unwanted energization of the PATIENT circuit (see 201.12.4.2.101);

d) any defect which results in a significant increase in output power relative to the output setting (see 201.12.4.4.101).

201.4.11 Power input

~~*Amendment:*~~

Replacement of first dash in compliance tests:

– The HF SURGICAL EQUIPMENT shall be operated in the output mode and using the load which creates the greatest steady state input current. Input current is measured and compared with markings and the contents of the technical description.

201.5 General requirements for testing of ME EQUIPMENT

Clause 5 of the general standard applies, except as follows:

201.5.4 * Other conditions

Addition:

aa) Particular care shall be taken to ensure accuracy and safety during measurement of HF output. See Annex AA for guidance.

AVA Documents
Document Sharing Hub

Full document details: IEC 60601-2-2 2017 RLV

201.6 Classification of ME EQUIPMENT and ME SYSTEMS

Clause 6 of the general standard applies.

201.7 ME EQUIPMENT identification, marking and documents

Clause 7 of the general standard applies, except as follows:

201.7.2.8.2 Other power sources

Amendment:

Subclause 7.2.8.2 of the general standard does not apply to ACTIVE OUTPUT TERMINALS or NE terminals.

201.7.2.10 APPLIED PARTS

Addition:

The relevant symbols required for marking DEFIBRILLATION-PROOF APPLIED PARTS shall be attached to the front panel, but are not required on the APPLIED PARTS.

Connections on the HF SURGICAL EQUIPMENT and ASSOCIATED EQUIPMENT for the connection of NE leads shall be marked with the symbols given in Figures 201.101 and 201.102 as follows:

Figure 201.101 – Symbol used with an EARTH REFERENCED PATIENT CIRCUIT

Figure 201.102 – Symbol used with a HF ISOLATED PATIENT CIRCUIT

Additional subclause:

201.7.2.10.101 * HF SURGICAL ACCESSORIES

HF SURGICAL ACCESSORIES (excluding HF ASSOCIATED EQUIPMENT) shall not be required to display the TYPE BF or TYPE CF mark on the ACCESSORY itself, the ACCOMPANYING DOCUMENTS, or on the packaging unless the RISK MANAGEMENT FILE identifies an unacceptable RISK associated with this exclusion.

201.7.4.2 * Control devices

Addition:

The output control shall have a scale and/or associated indicator showing the relative units of HIGH FREQUENCY output. The indication shall not be marked in watts unless the indicated power is delivered with an accuracy of ± 20 % over the total load resistance range specified in 201.7.9.3.1.

Documents
Document Sharing Hub
Full document details: IEC 60601-2-2 2017 RLV

The numeral "0" shall not be used unless no HF power in excess of 10 mW is delivered from an ACTIVE ELECTRODE or BIPOLAR ~~ELECTRODE~~ ACCESSORY in this position.

NOTE The compliance test is the application of subclause 201.12.1.102.

201.7.8.1 * Colours of indicator lights

Replace Table 2 in the general standard with the following Table 201.101:

Table 201.101 – Colours of indicator lights and their meaning for HF SURGICAL EQUIPMENT

Colour	Meaning
Red	Warning – immediate response by the OPERATOR is required, for example, a fault in the PATIENT circuit
Yellow	CUTTING mode
Blue	COAGULATION mode
Green	Ready for use
Any other colour	Meaning other than that of red, yellow, blue or green

201.7.8.2 * Colours of controls

Addition:

Where operating controls, output terminals, indicator lights, pedals (see 201.12.2) and pushbuttons of FINGERSWITCHES (see 201.12.2) are associated with a particular HF SURGICAL MODE, they shall be identified by a consistent, unique colour not in conflict with Table 201.101.

Compliance is checked by inspection.

201.7.9.2.2 Warning and safety notices

Additional subclause:

201.7.9.2.2.101 Additional information in instructions for use

a) * Notes on the application of HF SURGICAL EQUIPMENT. These notes shall draw the attention of the OPERATOR to certain precautions which are necessary in order to reduce the RISK of accidental burns. In particular, advice, when appropriate, shall be given on the following:

   1) The entire area of the NEUTRAL ELECTRODE should be reliably attached to a suitably prepared and appropriate area of the PATIENT's body as defined by the MANUFACTURER.

   2) The PATIENT should not come into contact with metal parts which are earthed or which have an appreciable capacitance to earth (for example operating table supports, etc.).

   3) Skin-to-skin contact (for example between the arms and body of the PATIENT) should be avoided, for example by insertion of dry gauze.

   4) When HF surgical equipment and physiological monitoring equipment are used simultaneously on the same PATIENT, any monitoring electrodes should be placed as far as possible from the surgical electrodes. Needle monitoring electrodes are not recommended.

      In all cases, monitoring systems incorporating HIGH FREQUENCY current limiting devices are recommended.

AVA Documents Document Sharing Hub

Full document details: IEC 60601-2-2 2017 RLV

5) The PATIENT leads should be positioned in such a way that contact with the PATIENT or other leads is avoided.

Temporarily unused ACTIVE ELECTRODES should be stored in a location that is isolated from the PATIENT.

6) For surgical procedures where the HF current could flow through parts of the body having a relatively small cross sectional area, the use of BIPOLAR techniques may be desirable in order to avoid unwanted tissue damage.

7) The output power selected should be as low as possible for the intended purpose. Certain devices or accessories may present an unacceptable RISK at low power settings. For example, with argon beam COAGULATION, the risk of gas embolism rises if there is insufficient HF power to produce a rapid, impermeable eschar on the target tissue.

8) Apparent low output or failure of the HF SURGICAL EQUIPMENT to function correctly at the normal operating settings may indicate faulty application of the neutral electrode or poor contact in its connections. In this case, the application of the NEUTRAL ELECTRODE and its connections should be checked before selecting a higher output power.

9) The use of flammable anaesthetics or oxidizing gases such as nitrous oxide (N_2O) and oxygen should be avoided if a surgical procedure is carried out in the region of the thorax or the head, unless these agents are sucked away.

Non-flammable agents should be used for cleaning and disinfection wherever possible.

Flammable agents used for cleaning or disinfecting, or as solvents of adhesives, should be allowed to evaporate before the application of HF surgery. There is a RISK of pooling of flammable solutions under the PATIENT or in body depressions such as the umbilicus, and in body cavities such as the vagina. Any fluid pooled in these areas should be mopped up before HF SURGICAL EQUIPMENT is used. Attention should be called to the danger of ignition of endogenous gases. Some materials, for example cotton and gauze, when saturated with oxygen may be ignited by sparks produced in NORMAL USE of the HF SURGICAL EQUIPMENT.

10) For PATIENTS with ~~cardiac pacemakers or other active implants, a possible HAZARD exists because interference with the action of the pacemaker may occur, or the pacemaker may be damaged~~ electrically conductive implants, a possible HAZARD exists due to concentration or re-direction of HF currents. In case of doubt, ~~approved~~ qualified advice should be obtained.

11) For HF SURGICAL EQUIPMENT with an operating mode as described in 201.12.2 c) 2), a warning is required to the effect that the output from either ACTIVE ELECTRODE may change during use.

b) A warning that interference produced by the operation of HF SURGICAL EQUIPMENT may adversely influence the operation of other electronic equipment. For PATIENTS with cardiac pacemakers or other active implants, a possible HAZARD exists because interference with the action of the active implant may occur, or the active implant may be damaged. In case of doubt, qualified advice should be obtained.

c) * For HF SURGICAL EQUIPMENT, the MAXIMUM OUTPUT VOLTAGE for each HF SURGICAL MODE and instruction regarding the RATED ACCESSORY VOLTAGE as follows:

1) For situations where the MAXIMUM OUTPUT VOLTAGE (U_{max}) is less than or equal to 1 600 V, provide instruction that ASSOCIATED EQUIPMENT and ACTIVE ACCESSORIES should be selected that have a RATED ACCESSORY voltage equal to or greater than the MAXIMUM OUTPUT VOLTAGE.

2) For situations where the MAXIMUM OUTPUT VOLTAGE (U_{max}) is greater than 1 600 V, calculate the variable y using the formula:

$$y = \frac{U_{max} - 400\ [V]}{600\ [V]}$$

Take the smaller of variable y or the number 6. If the result is less than or equal to the CREST FACTOR for that HF SURGICAL MODE, then provide instruction that ASSOCIATED

AVA Documents Document Sharing Hub

EQUIPMENT and ACTIVE ACCESSORIES should be selected that have a RATED ACCESSORY VOLTAGE equal to or greater than the MAXIMUM OUTPUT VOLTAGE.

3) For situations where the MAXIMUM OUTPUT VOLTAGE (U_{max}) is greater than 1 600 V, and the CREST FACTOR is less than the variable y calculated above, a warning shall be provided that any ASSOCIATED EQUIPMENT and ACTIVE ACCESSORIES used with such mode or setting ~~must~~ shall be RATED to withstand the combination of actual voltage and CREST FACTOR.

Where the MAXIMUM OUTPUT VOLTAGE varies with the output setting, that information shall be presented diagrammatically as a function of output setting.

d) A warning that failure of the HF SURGICAL EQUIPMENT could result in an unintended increase of output power.

e) * A statement of compatibility with specific MONITORING NE.

A warning that, unless a compatible MONITORING NE is used with a CONTACT QUALITY MONITOR, loss of safe contact between the NE and the PATIENT will not result in an auditory alarm.

NOTE 1 This requirement does not apply for HF SURGICAL EQUIPMENT only incorporating BIPOLAR output.

NOTE 2 This requirement does not apply for HF SURGICAL EQUIPMENT intended for use without a NEUTRAL ELECTRODE. (See 201.15.101).

f) Where the temperature under the NEUTRAL ELECTRODE, during intended or foreseen use, may exceed the limits listed in 11.1.2.2 of the general standard or 201.15.101.5 of this document, instructions, warnings and cautions for proper use of the NEUTRAL ELECTRODE shall be provided.

g) * A warning addressing the RISKS resulting from neuromuscular stimulation which can occur especially with modes which produce electrical arcs between the ACTIVE ELECTRODE and tissue.

h) * For HF SURGICAL EQUIPMENT that can be energized without continuous activation of a SWITCH SENSOR as per subclause 201.8.10.4.101.2, warnings ~~and/~~or cautions regarding the RISKS.

i) * For HF SURGICAL EQUIPMENT, the maximum permissible length of the ACCESSORY and its cord for each connector type.

NOTE 3 See Annex AA for additional information.

201.7.9.2.14 * ACCESSORIES, supplementary equipment, used material

Addition:

The instructions for use shall include:

a) Information concerning the selection and use of HF SURGICAL ACCESSORIES in order to avoid incompatibility and unsafe operation (see also 201.15.4.1.101 and 201.15.4.1.102).

b) Advice for the OPERATOR to avoid HF output settings where MAXIMUM OUTPUT VOLTAGE may exceed RATED ACCESSORY VOLTAGE.

c) Advice concerning the compatibility between a MONITORING NE and a CONTACT QUALITY MONITOR.

d) Advice for the OPERATOR regularly to inspect the ACCESSORIES. In particular, electrode cables and HF ENERGIZED ENDOTHERAPY DEVICES (see IEC 60601-2-18) should be checked (e.g. under magnification) for possible damage.

e) * For ASSOCIATED EQUIPMENT and ACTIVE ACCESSORIES, including separately supplied parts thereof, the RATED ACCESSORY VOLTAGE together with a warning to use only with HF SURGICAL MODE output settings resulting in a peak output voltage not greater than the RATED ACCESSORY VOLTAGE.

f) * On end use packaging for NEUTRAL ELECTRODES:

– If marked for single use, an expiration date.

Documents
Document Sharing Hub

Full document details: IEC 60601-2-2 2017 RLV

– Information necessary to prevent burns at the NE site, e.g. limitation of output setting, PATIENT preparation ~~and/~~or activation duration.

– If intended for use only on small PATIENTS, a marking in kg indicating the maximum PATIENT weight for which it is intended to be used. See 201.15.101.5

g) * On instructions for use for MONITORING NEUTRAL ELECTRODES:

– A statement of compatibility with specific CONTACT QUALITY MONITOR (s).

h) HF SURGICAL ACCESSORIES where the temperature under the NE, during intended or foreseen use, may result in the temperature exceeding the limits listed in subclause 11.1.2.2 of the general standard or subclause 201.15.101.5 of this document shall be accompanied by instructions, warnings and cautions for the proper use of NEUTRAL ELECTRODES.

i) On instructions for use for HF SURGICAL ACCESSORIES intended for use only with specific HF SURGICAL EQUIPMENT or HF waveforms or voltages, a detailed statement to that effect.

j) * For ACTIVE ELECTRODES and ACTIVE HANDLES, information to assess the following HAZARDOUS SITUATIONS:

– visibly exposed metal of the ACTIVE ELECTRODE shaft where it connects with the ACTIVE HANDLE

– poor electrical connection between the ACTIVE HANDLE and the ACTIVE ELECTRODE shaft

– poor fit between the ACTIVE HANDLE and the ACTIVE ELECTRODE shaft

NOTE 101 See Annex AA for additional information.

201.7.9.2.15 Environmental protection

Addition:

The instructions for use shall provide advice to the OPERATOR regarding the advisability of the use of smoke-plume extraction.

201.7.9.3 Technical description

201.7.9.3.1 * General

Addition:

– power output data – MONOPOLAR output (for all HF SURGICAL MODES available, any variable “blend” control being set to the maximum position) including:

- diagrams showing the power output at full and half output control settings minimally over the range of load resistance 100 Ω to 2 000 Ω, but extended as necessary to include the RATED LOAD;
- diagrams showing the power output versus the output control setting at a specified load resistance in the range as defined above;

– power output data – BIPOLAR output (for all HF SURGICAL MODES as defined above) including:

- diagrams showing the power output at full and half output control settings minimally over the range of load resistance 10 Ω to 1 000 Ω, but extended as necessary to include the RATED LOAD;
- diagrams showing the power output versus the output control setting at a specified load resistance in the range as defined above;

– voltage output data – MONOPOLAR and BIPOLAR output (for all HF SURGICAL MODES available). MAXIMUM OUTPUT VOLTAGE data required by 201.7.9.2.2.101 c);

– where HF SURGICAL EQUIPMENT is specified for use without a NEUTRAL ELECTRODE, this shall be stated;

AVA Documents Document Sharing Hub

Full document details: IEC 60601-2-2 2017 RLV

– where HF SURGICAL EQUIPMENT or ASSOCIATED EQUIPMENT is designed to have a single, FIXED output setting, then reference to "half output control settings" shall be ignored;

– the MAXIMUM OUTPUT CURRENT for each HF SURGICAL MODE;

– the maximum HEATING FACTOR generated in any 60 second period when the HF SURGICAL EQUIPMENT is used in any HIGH CURRENT MODE.

201.8 Protection against electrical HAZARDS from ME EQUIPMENT

Clause 8 of the general standard applies, except as follows:

~~201.8.3 Classification of APPLIED PARTS~~

~~*Addition:*~~

~~aa) The APPLIED PARTS of HF SURGICAL EQUIPMENT shall be TYPE BF or TYPE CF APPLIED PARTS.~~

201.8.4 Limitation of voltage, current or energy

Additional subclauses:

201.8.4.101 * NEUTRAL ELECTRODE monitoring circuit

HF SURGICAL EQUIPMENT having a ~~RATED OUTPUT POWER of more than 50 W~~ NE connection point shall be provided with one or more of the following:

– a CONTINUITY MONITOR ~~and/or~~ ;

– a CONTACT QUALITY MONITOR;

– an alternate means to ensure that no unacceptable temperature rise (see 201.15.101.5) occurs under the NE. Any alternate means shall be considered ESSENTIAL PERFORMANCE.

These may be deactivated in situations when the HF SURGICAL EQUIPMENT is used without NE as described in 201.8.6.1.

These shall be arranged so as to de-energize the MONOPOLAR output and to give an audible alarm when a failure of the NEUTRAL ELECTRODE circuit, its connections, or the alternate means occurs. The audible alarm shall meet the sound level requirements of 201.12.4.2.101 and shall not be externally adjustable. For the use of non-MONITORING NEs, the CONTACT QUALITY MONITOR may be deactivated. That selection shall be visibly indicated to the OPERATOR. In this case, the requirement for either a continuity monitor or an alternate means to ensure that no unacceptable temperature rise occurs under the NE shall still apply.

NOTE 1 In this subclause the use of the conjunction "or" is inclusive and can mean either the first choice, the second choice, or both.

NOTE 2 This audible alarm and visible indicator light are not intended to meet the definition of an ALARM SIGNAL in IEC 60601-1-8. See also Clause 208 of this document.

The monitoring circuit shall be supplied from a power source isolated from the MAINS PART and from earth and having a voltage not exceeding 12 V. The limitation of monitoring current for a CONTACT QUALITY MONITOR is defined in 201.8.7.3.

An additional visible warning consisting of a red indicator light shall be provided (see 201.7.8.1).

Compliance of a CONTINUITY MONITOR is checked by operating the HF SURGICAL EQUIPMENT at maximum output control setting in each operating mode into the circuit shown in Figure 201.103. The switch is closed and opened five times and the HF output shall be disabled and the alarm shall sound at each opening of the switch.

AVA Documents
Document Sharing Hub

Full document details: IEC 60601-2-2 2017 RLV

Compliance of a CONTACT QUALITY MONITOR is checked by switching on the mains of the HF SURGICAL EQUIPMENT and setting its controls for MONOPOLAR operation, except that it shall not be activated. Then a compatible MONITORING NE, selected according to the advice per 201.7.9.2.2.101 e), is connected to the NE connections of the CONTACT QUALITY MONITOR. The NE is then placed, according to marked instructions for use, with full contact on a human subject or a suitable surrogate surface, and the CONTACT QUALITY MONITOR is set up according to instructions for use. The HF SURGICAL EQUIPMENT is then activated in a MONOPOLAR HF SURGICAL MODE. No alarm shall sound and HF output shall be present. With the HF SURGICAL EQUIPMENT now activated, the contact area between the NE and the human subject or a suitable surrogate surface is gradually reduced until a NE alarm occurs. The remaining contact area (alarm area), A_a shall be recorded for subsequent thermal rise testing per subclause 201.15.101.5, and no HF output shall be produced when activation is attempted. This test shall be repeated along both axes using at least three samples of each compatible MONITORING NE.

Compliance of an alternate means to ensure that no unacceptable temperature rise occurs under the NE is checked by review of the MANUFACTURER'S documentation and RISK MANAGEMENT FILE.

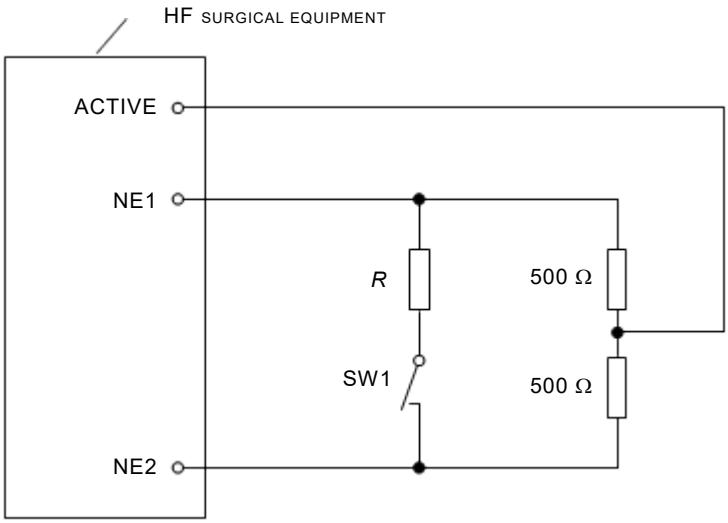

For single plates: $R = 0\ \Omega$

For split plates: *R* as specified by the MANUFACTURER so as juts to keep the equipment active with SW1 closed

IEC

~~NOTE~~ NEUTRAL ELECTRODES which are split into more than two parts should be tested accordingly.

Figure 201.103 – Circuit suitable for testing compliance to 201.8.4.101

201.8.4.102 * Neuromuscular stimulation

In order to minimize the possibility of neuromuscular stimulation, a capacitance shall be incorporated into the PATIENT circuit so that it is effectively in series with the ACTIVE ELECTRODE or one conductor of a BIPOLAR ~~ELECTRODE~~ ACCESSORY. This capacitance shall not exceed 5 nF for MONOPOLAR PATIENT circuits and 50 nF for BIPOLAR PATIENT circuits. The DC resistance between ACTIVE and NEUTRAL ELECTRODE terminals, or between the terminals of a BIPOLAR output circuit, shall not be less than 2 MΩ.

Compliance is checked by inspection of the circuit arrangement and by measurement of the DC resistance between the output terminals.

Documents
Document Sharing Hub
Full document details: IEC 60601-2-2 2017 RLV

201.8.5.1.2 * MEANS OF PATIENT PROTECTION (MOPP)

Amendment:

For HF SURGICAL EQUIPMENT ~~and HF SURGICAL ACCESSORIES~~, the CREEPAGE DISTANCES and AIR CLEARANCES of insulation between the HF APPLIED PARTS and the ENCLOSURE including SIGNAL INPUT/OUTPUT PARTS, between the HF ~~APPLIED PARTS~~ PATIENT CIRCUITS and the intermediate circuit and between different HF PATIENT CIRCUITS shall be at least 3 mm/kV or 4 mm, whichever is the greater. The reference voltage shall be the maximum peak voltage. These separations need not be subjected to the dielectric strength test of 201.8.8.3.

HF PATIENT CIRCUITS of HF SURGICAL EQUIPMENT shall be considered as APPLIED PARTS in the context of this subclause.

~~NOTE~~ These CREEPAGE DISTANCES and AIR CLEARANCES are intended to represent two MEANS OF PROTECTION.

This requirement does not apply for components when the adequacy of ratings can be demonstrated, for example by component MANUFACTURERS' ratings or by the dielectric strength test of 201.8.8.3.

This requirement does not apply to HF SURGICAL ACCESSORIES. The requirements and tests for HF SURGICAL ACCESSORIES are found in 201.8.8.3 and 201.15.101.4.

201.8.5.2.3 * PATIENT leads or PATIENT cables

Amendment:

This requirement shall not apply to the ACTIVE CONNECTORS or to any NE connectors except as detailed below.

For NEUTRAL ELECTRODE cables, the connector which is remote from the PATIENT shall be constructed so that the connections cannot contact conductive live parts of FIXED mains socket outlets or MAINS CONNECTORS.

If able to be plugged into a FIXED mains socket-outlet or MAINS CONNECTOR, the said part shall be protected from making contact with parts at mains voltage by insulating means providing a CREEPAGE DISTANCE of at least 1,0 mm and a dielectric strength of 1 500 V.

Compliance is checked by inspection and by applying the dielectric strength test to the conductive connection of that part of the connector identified above.

201.8.5.5 * DEFIBRILLATION-PROOF APPLIED PARTS

Amendment:

HF PATIENT CIRCUITS of HF SURGICAL EQUIPMENT shall be considered as APPLIED PARTS in the context of this subclause.

Compliance is checked by the common-mode test only, as described in 8.5.5.1 and Figure 9 of the general standard using a test voltage of 2 kV instead of 5 kV.

After this test, HF SURGICAL EQUIPMENT shall be capable of meeting all the requirements and tests of this document and of performing its intended function as described in the ACCOMPANYING DOCUMENTS.

Documents
Document Sharing Hub
Full document details: IEC 60601-2-2 2017 RLV

201.8.6.1 * Applicability of requirements

Addition:

Generally, a PROTECTIVE EARTH CONDUCTOR shall not carry functional current. However, in HF SURGICAL EQUIPMENT having a RATED OUTPUT POWER not exceeding 50 W and intended for use without a NEUTRAL ELECTRODE, the PROTECTIVE EARTH CONDUCTOR of the mains cord may be used as a return path for the functional HIGH FREQUENCY current.

201.8.7.1 * General requirements

Item b)

Addition:

– with the HF not energized, but in such a way that the low-frequency LEAKAGE CURRENTS are not affected.

Amendment:

These investigations shall be carried out with the HF SURGICAL EQUIPMENT switched on but with PATIENT circuits not activated.

201.8.7.3 * Allowable values

Item b)

Addition:

PATIENT AUXILIARY CURRENTS associated with CONTACT QUALITY MONITORS shall not exceed the allowable values for TYPE BF APPLIED PARTS.

Item e)

Amendment:

The 10 mA limit for LEAKAGE CURRENT does not apply to HF LEAKAGE CURRENTS tested from ACTIVE and NEUTRAL ELECTRODES with PATIENT circuits activated (see 201.8.7.3.101).

Additional subclause:

201.8.7.3.101 Thermal effects of HF LEAKAGE CURRENTS

In order to prevent unintended thermal burns, HF LEAKAGE CURRENTS tested from ACTIVE and NEUTRAL ELECTRODES with HF PATIENT CIRCUITS activated shall, depending on their design, comply with the following requirements.

~~NOTE Independent requirements and conformance tests for HF SURGICAL EQUIPMENT and ACCESSORIES are under consideration.~~

*a) HIGH FREQUENCY LEAKAGE CURRENTS

For all measurements of HF LEAKAGE CURRENTS, any metal ENCLOSURES of CLASS II HF SURGICAL EQUIPMENT and INTERNALLY POWERED HF SURGICAL EQUIPMENT shall be connected to earth. During these tests, HF SURGICAL EQUIPMENT having an insulating ENCLOSURE shall be positioned on earthed metal having an area at least equal to the base of the HF SURGICAL EQUIPMENT, during these tests.

AVA Documents
Document Sharing Hub

Full document details: IEC 60601-2-2 2017 RLV

During all measurements of HF LEAKAGE CURRENTS, the POWER SUPPLY CORD of the HF SURGICAL EQUIPMENT shall be folded up to form a bundle having a length not exceeding 40 cm.

1) ~~NEUTRAL ELECTRODE referenced to earth~~ For MONOPOLAR EARTH REFERENCED PATIENT CIRCUITS

The PATIENT circuit is isolated from earth but the NEUTRAL ELECTRODE is referenced to earth at HIGH FREQUENCIES by components (for example a capacitor) satisfying the requirements of a TYPE BF APPLIED PART. When tested as described below, the HF LEAKAGE CURRENT flowing from the NEUTRAL ELECTRODE through a non-inductive 200 Ω resistor to earth shall not exceed 150 mA.

Compliance is checked by the following tests.

Test 1 – The test is performed on each single output of the HF SURGICAL EQUIPMENT in turn with the electrode cables and electrodes as shown in Figure 201.104. The cables are spaced 0,5 m apart on an insulating surface 1 m above an earthed conductive plane.

The output is loaded with 200 Ω and the HF SURGICAL EQUIPMENT is operated at maximum output setting in each operating mode. The HF LEAKAGE CURRENT flowing from the NEUTRAL ELECTRODE through a non-inductive resistor of 200 Ω to earth is measured.

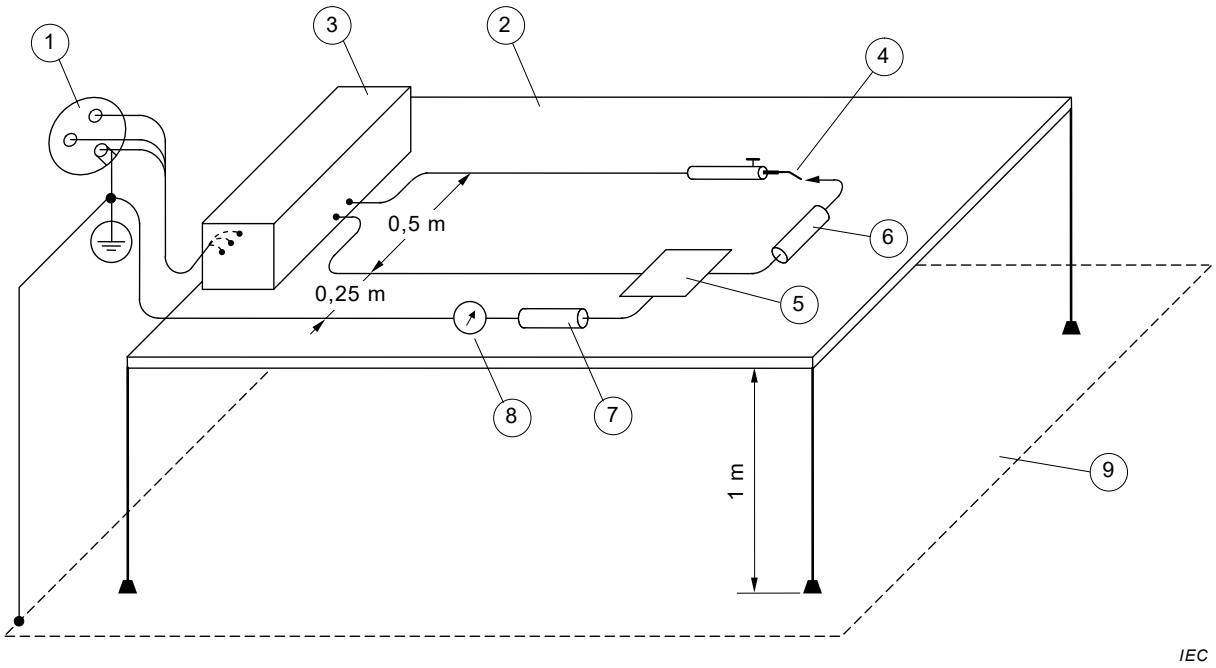

Key

1	SUPPLY MAINS
2	Table, made of insulating material
3	HF SURGICAL EQUIPMENT
4	ACTIVE ELECTRODE
5	NEUTRAL ELECTRODE, metallic or in contact with metal foil of the same size
6	Load resistance, 200 Ω
7	Measuring resistance, 200 Ω
8	HF current meter
9	Earthed conductive plane

Figure 201.104 – Measurement of HF LEAKAGE CURRENT ~~with NEUTRAL ELECTRODE referenced to earth~~ for EARTH REFERENCED PATIENT CIRCUITS and load between electrodes

Documents
Document Sharing Hub
Full document details: IEC 60601-2-2 2017 RLV

Test 2 – The HF SURGICAL EQUIPMENT is set up as for test 1, but the 200 Ω load resistor is connected between the ACTIVE ELECTRODE and the PROTECTIVE EARTH TERMINAL of the HF SURGICAL EQUIPMENT as shown in Figure 201.105. The HF LEAKAGE CURRENT flowing from the NEUTRAL ELECTRODE is measured.

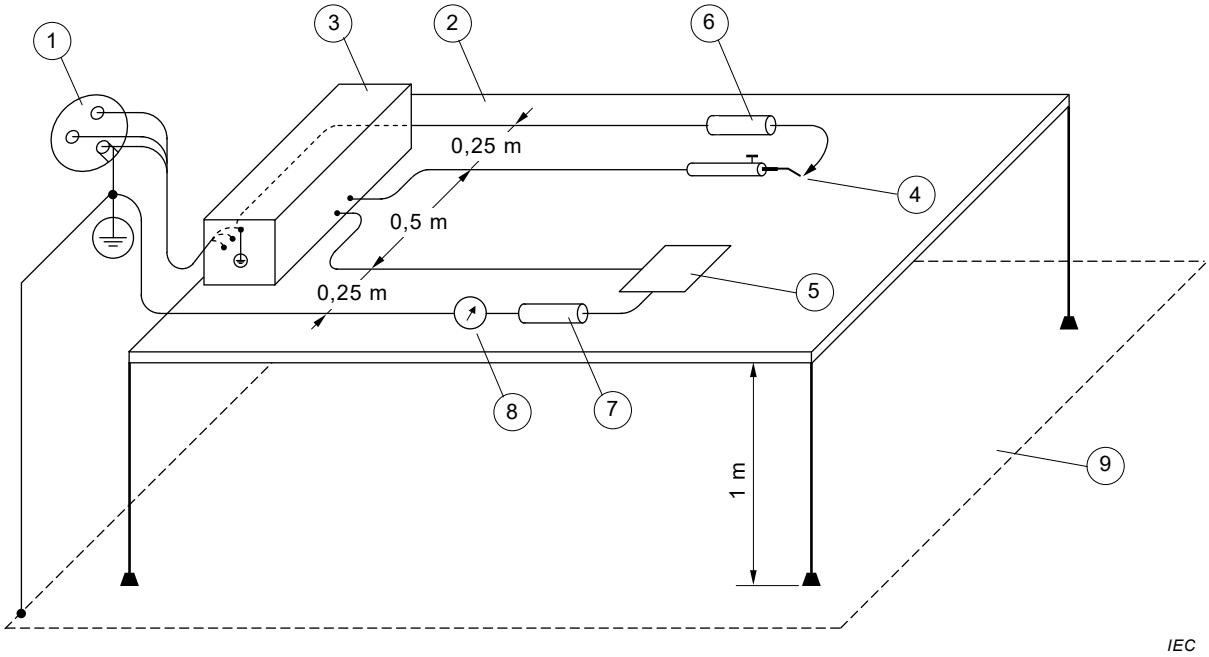

Key

1 SUPPLY MAINS
2 Table, made of insulating material
3 HF SURGICAL EQUIPMENT
4 ACTIVE ELECTRODE
5 NEUTRAL ELECTRODE, metallic or in contact with metal foil of the same size
6 Load resistance, 200 Ω
7 Measuring resistance, 200 Ω
8 HF current meter
9 Earthed conductive plane

Figure 201.105 – Measurement of HF LEAKAGE CURRENT ~~with NEUTRAL ELECTRODE referenced to earth~~ for EARTH REFERENCED PATIENT CIRCUITS and a load resistance from ACTIVE ELECTRODE to earth

2) ~~NEUTRAL ELECTRODE ISOLATED from earth at HIGH FREQUENCY~~ For MONOPOLAR HF ISOLATED PATIENT CIRCUITS

The PATIENT circuit is isolated from earth at both high and low frequencies, and the isolation shall be such that the HF LEAKAGE CURRENT flowing, in turn, from each electrode through a 200 Ω non-inductive resistor to earth does not exceed 150 mA when tested as described below.

Compliance is checked by the following test.

The HF SURGICAL EQUIPMENT is set up as shown in Figure 201.106, the output being unloaded and loaded at the RATED LOAD.

~~*Any metal ENCLOSURES of CLASS II HF SURGICAL EQUIPMENT and INTERNALLY POWERED HF SURGICAL EQUIPMENT shall be connected to earth. HF SURGICAL EQUIPMENT having an insulating ENCLOSURE shall be positioned on earthed metal having an area at least equal to that of the base of the HF SURGICAL EQUIPMENT, during this test.*~~ *The HF LEAKAGE CURRENT is measured from each electrode in turn while the HF SURGICAL EQUIPMENT is operated at maximum output setting in each HF SURGICAL MODE.*

AVA Documents
Document Sharing Hub
Full document details: IEC 60601-2-2 2017 RLV

NOTE1 The above requirements 1) and 2) do not apply for HF SURGICAL EQUIPMENT having a RATED OUTPUT POWER not exceeding 50 W and intended for use without a NEUTRAL ELECTRODE.

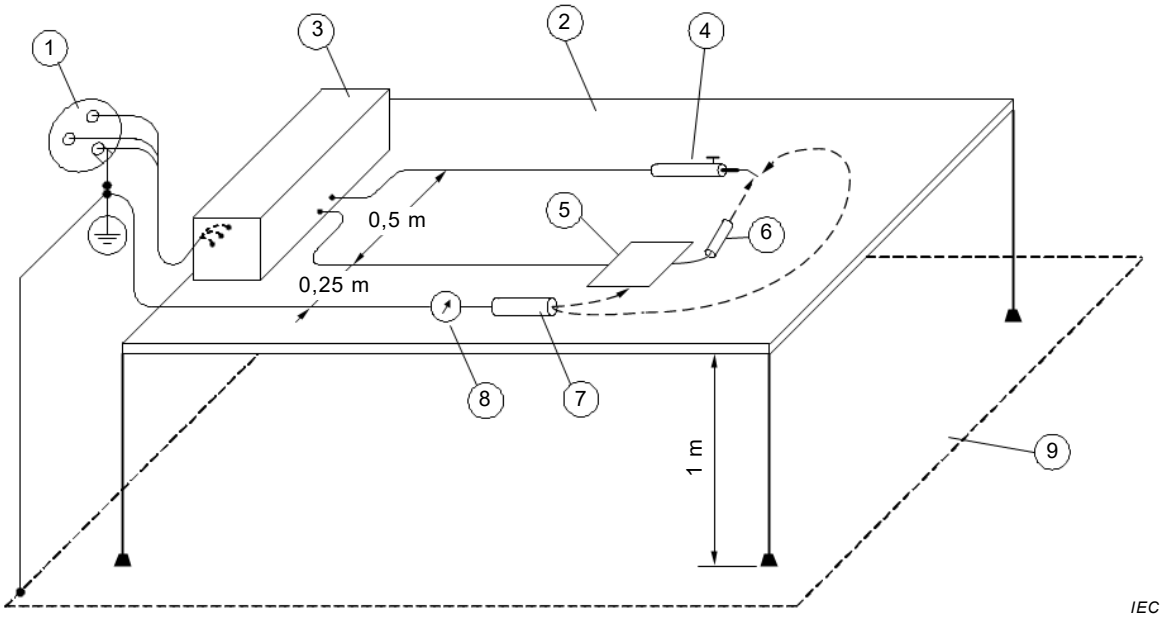

Key

1 SUPPLY MAINS
2 Table, made of insulating material
3 HF SURGICAL EQUIPMENT
4 ACTIVE ELECTRODE
5 NEUTRAL ELECTRODE, metallic or in contact with metal foil of the same size
6 RATED LOAD
7 Measuring resistance, 200 Ω
8 HF current meter
9 Earthed conductive plane

Figure 201.106 – Measurement of HF LEAKAGE CURRENT ~~with NEUTRAL ELECTRODE isolated from earth at high frequency~~ for HF ISOLATED PATIENT CIRCUITS

*3) For BIPOLAR ~~application~~ HF PATIENT CIRCUITS

Any PATIENT circuit specifically designed for BIPOLAR application shall be isolated from earth and from other APPLIED PARTS at both high and low frequencies.

The HF LEAKAGE CURRENT flowing from either pole of the BIPOLAR output to earth and to the NEUTRAL ELECTRODE via a 200 Ω non-inductive resistor in each line shall not exceed the value which produces a power in a 200 Ω non-inductive resistor equal to 1 % of the maximum BIPOLAR RATED OUTPUT POWER, with all output controls set to maximum.

Compliance is checked by the following test.

The HF SURGICAL EQUIPMENT is set up as shown in Figure 201.107. The test is conducted using one side of the BIPOLAR output and using BIPOLAR and (if applicable) NEUTRAL ELECTRODE leads supplied or recommended by the MANUFACTURER. The test is conducted with the output first being unloaded and then repeated with the output loaded at the RATED LOAD. The squared current value multiplied by 200 Ω shall not exceed the requirement above. The test is then repeated for the other side of the BIPOLAR output.

~~*Any metal ENCLOSURES of CLASS II HF SURGICAL EQUIPMENT and INTERNALLY POWERED HF SURGICAL EQUIPMENT shall be connected to earth. HF SURGICAL EQUIPMENT having an insulating ENCLOSURE shall be positioned on earthed metal having an area at least equal to that of the base of the HF SURGICAL EQUIPMENT.*~~

AVA Documents Document Sharing Hub

~~*During all measurements of HF LEAKAGE CURRENTS, the POWER SUPPLY CORD of the HF SURGICAL EQUIPMENT shall be folded up to form a bundle having a length not exceeding 40 cm.*~~

NOTE 2 The above requirements 1), 2) and 3) apply to HF SURGICAL EQUIPMENT with both TYPE BF and TYPE CF APPLIED PARTS. ~~Requirements for HF ENCLOSURE LEAKAGE CURRENTS are under consideration.~~

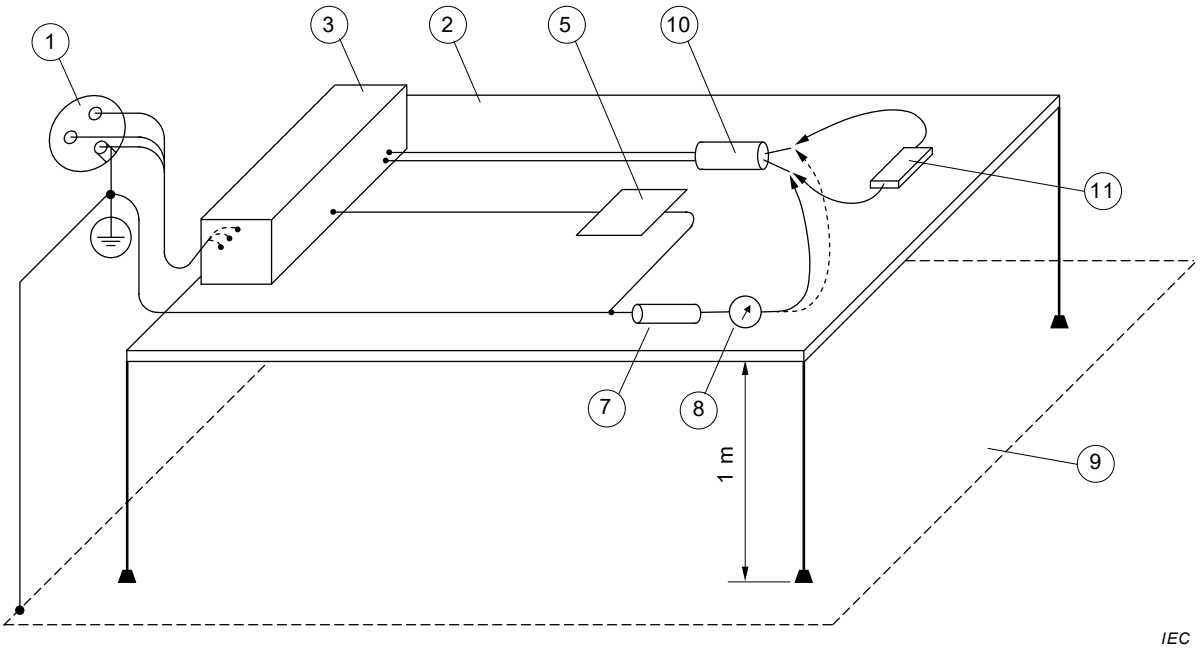

Key

1	SUPPLY MAINS
2	Table, made of insulating material
3	HF SURGICAL EQUIPMENT
5	NEUTRAL ELECTRODE, metallic or in contact with metal foil of the same size
7	Measuring resistance, 200 Ω
8	HF current meter
9	Earthed conductive plane
10	Activated BIPOLAR ~~ELECTRODE~~ ACCESSORY
11	Load resistance as required with HF power measuring device

Figure 201.107 – Measurement of HF LEAKAGE CURRENT from a BIPOLAR ~~ELECTRODE~~ ACCESSORY

*b) HIGH FREQUENCY LEAKAGE CURRENTS measured directly at the HF SURGICAL EQUIPMENT terminals

The preceding item a) may alternatively be fulfilled with a limit of 100 mA for 1) and 2) and with unchanged limits corresponding to 1 % of the BIPOLAR RATED OUTPUT POWER into 200 Ω and not to exceed 100 mA for 3) when the HF LEAKAGE CURRENT is measured directly at the HF SURGICAL EQUIPMENT terminals.

Compliance is checked by measurement similar to the tests described in 201.8.7.3.101 a), but without the electrode cables, and using leads as short as practicable for connecting the load resistor, the measuring resistor and the current measuring instrument to the HF SURGICAL EQUIPMENT terminals.

c) Cross-coupling between different HF PATIENT CIRCUITS

When any other PATIENT circuit is activated at its highest output settings and at all available operation modes, then:

Documents
Document Sharing Hub
Full document details: IEC 60601-2-2 2017 RLV

1) A non-activated MONOPOLAR PATIENT circuit shall produce no more than 150 mA HIGH FREQUENCY current into a 200 Ω load to earth and, in turn, to the NEUTRAL ELECTRODE.

2) A non-activated BIPOLAR PATIENT circuit shall produce no more than 50 mA into a 200 Ω load connected across the two terminals or – with short circuited terminals – into a 200 Ω load to earth and into a 200 Ω load to the NEUTRAL ELECTRODE (both currents added, see Figure 201.107).

Compliance is checked by measurements using the test arrangements specified in subclause 201.8.7.3.101 b) and the HF SURGICAL EQUIPMENT is set up as shown in Figure 201.106 (for MONOPOLAR) or Figure 201.107 (for BIPOLAR PATIENT circuits).

201.8.8.2 Distance through solid insulation or use of thin sheet material

Amendment:

The requirements 8.8.2 a) and 8.8.2 b) of the general standard do not apply to HF SURGICAL ACCESSORIES.

201.8.8.3 Dielectric strength

Amendment:

These requirements do not apply to HF SURGICAL ACCESSORIES. The requirements and tests for HF SURGICAL ACCESSORIES are given in 201.8.8.3.101 and 201.15.101.4.

Additional test conditions:

aa) If, during dielectric strength testing of solid insulation forming MEANS OF PATIENT PROTECTION, a breakdown or flashover occurs through the atmosphere at the AIR CLEARANCE specified in 8.9 of the general standard and 201.8.5.1.2 of this document, an insulating barrier may be placed to prevent this breakdown so that the protective insulation can be tested.

bb) If, during dielectric strength testing of solid insulation forming MEANS OF PATIENT PROTECTION, a breakdown or flashover occurs at the CREEPAGE DISTANCE specified in 8.9 of the general standard and 201.8.5.1.2 of this document, then the test shall be carried out on the components which provide MEANS OF PATIENT PROTECTION, such as transformers, relays, optocouplers or CREEPAGE DISTANCES on printed circuit boards.

Additional subclauses:

201.8.8.3.101 * ACTIVE ACCESSORY insulation

ACTIVE ACCESSORIES and cords of ACTIVE ACCESSORIES shall be sufficiently insulated to mitigate unintended thermal burn RISK to the PATIENT and OPERATOR under conditions of NORMAL USE.

Compliance is checked as follows:

Test samples, other than those marked for single use, shall have undergone the cleaning, disinfection and sterilization methods using the number of cycles as specified in the instructions for use. See 7.9.2.12 in the general standard.

The insulated parts of all ACTIVE ACCESSORIES, other than ACTIVE HANDLES and ACTIVE CONNECTORS, shall be preconditioned by immersion in 0,9 % saline for 12 h. Operative conductors which may have been exposed in preparation for testing, as well as the insulation of the cords of ACTIVE ACCESSORIES within 100 mm of the ends, shall be protected from contact with saline. Upon completion of this preconditioning, excess saline shall be removed from surfaces and cavities by shaking and/or wiping with a dry cloth.

AVA Documents
Document Sharing Hub

Full document details: IEC 60601-2-2 2017 RLV

Immediately following saline preconditioning, applicable electrical testing shall be conducted in the following order:

- *HF leakage (201.8.8.3.102);*
- *HF dielectric strength (201.8.8.3.103);*
- *mains frequency dielectric strength (201.8.8.3.104).*

201.8.8.3.102 * ACTIVE ACCESSORY HF leakage

a) Measured HF LEAKAGE CURRENT

The insulation applied to ~~cords for ACTIVE ACCESSORIES intended for MONOPOLAR application~~ ACTIVE ACCESSORIES, including ACTIVE ELECTRODE INSULATION but excluding ACTIVE CONNECTORS shall limit HF LEAKAGE CURRENT passing through the external surface of the insulation to less than $I_{leakage}$

The limit for ACTIVE ACCESSORIES intended for MONOPOLAR application is:

$$I_{leakage}[\text{mA}] = 9{,}0 \times 10^{-6} \times d \times L \times f_{test} \times U_{peak}$$

$$I_{leakage}[\text{mA}] = 2{,}0 \times 10^{-5} \times d \times L \times f_{test} \times U_{peak}$$

where

d is the smallest outer dimension of the insulation in mm,

f_{test} is the HF test voltage frequency in kHz,

L is the length of sample insulation through which HF LEAKAGE CURRENT passes, in cm, and

U_{peak} is the peak HF test voltage.

The corresponding limit for ~~cords~~ ACTIVE ACCESSORIES intended for BIPOLAR application is

$$I_{leakage}[\text{mA}] = 1{,}8 \times 10^{-5} \times d \times L \times f_{test} \times U_{peak}$$

$$I_{leakage}[\text{mA}] = 4{,}0 \times 10^{-5} \times d \times L \times f_{test} \times U_{peak}$$

Compliance is checked as follows:

The full length of the sample insulation except that within 1 cm of exposed conductors, but no more than 30 cm of length, shall be immersed in a 0,9 % saline bath or wrapped in a saline-soaked porous cloth during the entire course of the test. All operative inner conductors shall be connected together to one pole of an HF voltage source having an approximately sinusoidal waveform and a frequency f_{test} of 300 kHz to 1 MHz. The opposite pole of the HF voltage source is connected to a conductive electrode immersed in the saline bath or to foil wrapped around the midsection of the saline-soaked cloth. HF LEAKAGE CURRENT $I_{leakage}$ is monitored by means of a suitable instrument connected in series with the HF voltage source output. The HF test voltage U_{peak} is monitored between the HF voltage source output poles.

The HF test voltage U_{peak} is advanced until the peak voltage equals the lesser of RATED ACCESSORY VOLTAGE or 400 V_{peak}. The measured HF LEAKAGE CURRENT $I_{leakage}$ shall not exceed the specified limit.

b) Measured HF leakage capacitance

Documents
Document Sharing Hub

Full document details: IEC 60601-2-2 2017 RLV

The preceding item a) may alternatively be fulfilled by limiting measured HF leakage capacitance for ~~cords~~ ACTIVE ACCESSORIES intended for MONOPOLAR application to no more than

$$\cancel{C_{\text{leakage}}[\text{pF}] = 2 \times d \times L}$$

$$C_{\text{leakage}}[\text{pF}] = 4{,}4 \times d \times L$$

and for ~~cords~~ ACTIVE ACCESSORIES intended for BIPOLAR application to no more than

$$\cancel{C_{\text{leakage}}[\text{pF}] = 4 \times d \times L}$$

$$C_{\text{leakage}}[\text{pF}] = 8{,}8 \times d \times L$$

where

d is the smallest outer dimension of the insulation, in mm, and

L is the length of sample insulation immersed in saline bath, in cm.

The measured HF leakage capacitance shall not exceed the specified relevant limit.

Compliance is checked as follows:

The full length of the sample insulation except that within 1 cm of exposed conductors, but no more than 30 cm of length, shall be immersed in a 0,9 % saline bath or wrapped in a saline-soaked porous cloth during the entire course of the test. All operative inner conductors shall be connected together to one measuring terminal of a capacitance-measuring instrument having a sensing frequency of 100 kHz to 1 MHz. The opposite measuring terminal of the capacitance measuring instrument is connected to a conductive electrode immersed in the saline bath or to foil wrapped around the mid-section of the saline soaked cloth. HF leakage capacitance is the capacitance indicated by the capacitance measuring instrument when operated according the instrument MANUFACTURER's recommended practices.

~~NOTE HF leakage limits and tests for all parts of ACTIVE ACCESSORIES are under consideration.~~

201.8.8.3.103 * ACTIVE ACCESSORY HF dielectric strength

The insulation applied to ACTIVE ACCESSORIES shall be capable of withstanding HF voltage of 120 % of the RATED ACCESSORY VOLTAGE.

Compliance is checked as follows:

The tests shall be performed at a test voltage related to the RATED ACCESSORY VOLTAGE specified by the MANUFACTURER of the HF SURGICAL ACCESSORY in the instructions for use (see 201.7.9.2.14 e)), as detailed in the following test methods. For ACTIVE ELECTRODES and the cords of ACTIVE ACCESSORIES, a portion of the insulation which has been preconditioned in saline is wound with a maximum of five turns of bare conductive wire having a diameter of 0,4 mm ± 10 % at a pitch of at least 3 mm without deforming the surface of the sample. If necessary to prevent inadvertent arc discharge, the CREEPAGE DISTANCE between this wire and operative conductive parts of ACTIVE ELECTRODES may be increased to 10 mm by application of insulation. Such added insulation shall have a thickness no greater than 1 mm and shall cover no more than 2 mm of ACTIVE ELECTRODE INSULATION. One pole of the HF test voltage source shall be connected to the bare conductive test wire, and the opposite pole shall be connected simultaneously to all operative conductors in the sample being tested.

Documents
Document Sharing Hub

Full document details: IEC 60601-2-2 2017 RLV

ACTIVE HANDLES, together with any detachable cords and detachable ACTIVE ELECTRODES which are specified as compatible, shall be wrapped in a porous cloth soaked in 0,9 % saline. This cloth shall cover the entire exterior surface of the handle and extend at least 150 mm on to the surface of the cord and 5 mm on to the ACTIVE ELECTRODE INSULATION. If necessary, the CREEPAGE DISTANCE between the cloth and exposed operative conductive parts of the ACTIVE ELECTRODE may be insulated as described above. The midsection of the saline-soaked cloth is wrapped with metal foil and connected to one pole of the HF test voltage source. All operative inner conductors in the samples being tested, including the operative tip(s) of the ACTIVE ELECTRODE, shall be connected simultaneously to the opposite pole.

The peak HF test voltage is monitored between the HF voltage source output poles. The output of the HF test voltage source is then increased until the peak voltage equals 120 % of the peak voltage according to the RATED ACCESSORY VOLTAGE and maintained for 30 s in such a manner that it stresses the insulation of the test sample. No breakdown of the insulation material shall occur and the same insulation shall subsequently be tested at mains frequency according to 201.8.8.3.104.

NOTE Blue corona is normal and is not considered a breakdown of insulation.

Those parts of the test samples which are not insulated in NORMAL USE shall be adequately protected against contact with the saline solution during preconditioning, and this protection shall be left in place during the tests.

Test conditions:

Apply an approximately sinusoidal voltage at a frequency of 400 kHz ± 100 kHz with a continuous waveform, or alternately with a modulated waveform (modulation frequency higher than 10 kHz) with the peak test voltage equal to 120 % of the peak voltage according to the RATED ACCESSORY VOLTAGE specified by the MANUFACTURER of the HF SURGICAL ACCESSORY and with a test CREST FACTOR (cf_{test}) which is defined as follows:

For RATED ACCESSORY VOLTAGES less than or equal 1 600 V:

$$cf_{test} \leq 2$$

For RATED ACCESSORY VOLTAGES greater 1 600 V and less than or equal to 4 000 V:

$$cf_{test} = \frac{U_{acc} - 400\,[\mathrm{V}]}{600\,[\mathrm{V}]} \quad \text{(with a tolerance of } \pm 10\ \%\text{)}$$

where

U_{acc} is the rated accessory voltage in V.

For RATED ACCESSORY VOLTAGES greater 4 000 V:

$$cf_{test} = 6 \quad \text{(with a tolerance of } \pm 10\ \%\text{)}$$

ACTIVE ACCESSORIES intended to be used with HF SURGICAL MODES or output settings requiring specific approval shall withstand 120 % of the peak output voltage of such HF SURGICAL MODE or output setting. They shall be tested under the same conditions as described above but with the actual CREST FACTOR of such HF SURGICAL MODE or output setting (see 201.7.9.2.2.101 c) 3)).

In situations where the test conditions present a capacitive load that prevents maintaining the characteristics of the HF test voltage, testing of the ACTIVE HANDLES may be conducted in sufficiently small sections of the insulation, in sequence, until the entire exterior surface of the

AVA Documents
Document Sharing Hub

Full document details: IEC 60601-2-2 2017 RLV

handle (including at least 150 mm onto the surface of the cord and 5 mm onto the ACTIVE ELECTRODE INSULATION) has been tested.

201.8.8.3.104 * ACTIVE ACCESSORY mains frequency dielectric strength

The insulation applied to an ACTIVE ACCESSORY, including those portions of insulation having been tested at HF according to 201.8.8.3.103, shall withstand a DC or mains frequency peak voltage of 1 000 V greater than the RATED ACCESSORY VOLTAGE specified by the MANUFACTURER of the HF SURGICAL ACCESSORY.

Compliance is tested as follows:

The test voltage source shall produce a DC or mains frequency signal. The test duration shall be 30 s for ACTIVE HANDLES, ACTIVE ELECTRODES and ACTIVE CONNECTORS. The test duration for the cords of ACTIVE ACCESSORIES shall be 5 min. Although corona discharge may occur, no breakdown of the insulation or flashover shall occur. Immediately after this dielectric strength test, any incorporated FINGERSWITCH shall be operated 10 times. An ohmmeter, or other suitable means, shall be used to test whether the switching mechanism operates as intended to ensure that, when connected to HF SURGICAL EQUIPMENT, the HF output will be de-energized when the FINGERSWITCH is released.

The insulated parts of ACTIVE CONNECTORS more than 10 mm CREEPAGE DISTANCE from exposed operative conductors shall be wrapped with a porous cloth soaked in 0,9 % saline. The midsection of the cloth is then wrapped with metal foil. The test voltage is applied between the foil and all of the operative ACTIVE CONNECTOR contacts.

The entire length of the insulation of cords of ACTIVE ACCESSORIES, including that portion previously tested at HF according to 201.8.8.3.103, but exclusive of the sections within 100 mm of the ends, shall be immersed in a bath of 0,9 % saline. The test voltage is applied between a conductive electrode immersed in the saline bath and all of the conductors in the cord simultaneously.

ACTIVE HANDLES complete with detachable electrodes are prepared for testing and connected to the test voltage source using the same techniques as described in 201.8.8.3.103. The saline-soaked cloth and foil applied for that test may be left in place for this test provided care is taken to ensure that the cloth remains thoroughly wetted.

201.8.9.1.5 ME EQUIPMENT RATED for high altitudes

Amendment:

This requirement does not apply for the separation between HF PATIENT CIRCUITS and the ENCLOSURE including SIGNAL INPUT/OUTPUT PARTS and between different HF PATIENT CIRCUITS.

For HF SURGICAL EQUIPMENT and ASSOCIATED EQUIPMENT, requirements for separation between HF PATIENT CIRCUITS and the ENCLOSURE including SIGNAL INPUT/OUTPUT PARTS, between HF PATIENT CIRCUITS and the intermediate circuit and between different HF PATIENT CIRCUITS are specified by 201.8.5.1.2.

201.8.10.4 Cord-connected HAND-HELD parts and cord-connected foot-operated control devices

201.8.10.4.1 Limitation of operating voltages

Subclause 8.10.4.1 of the general standard does not apply. See 201.8.10.4.101.

201.8.10.4.2 * Connection cords

Replacement:

AVA Documents
Document Sharing Hub

Full document details: IEC 60601-2-2 2017 RLV

Anchorages of cords of ACTIVE ACCESSORIES shall be designed to minimize the RISK to PATIENTS and OPERATORS arising from damage to conductors or insulation caused by cable flexure or excessive tension.

Compliance shall be checked by inspection and by the following test:

The anchorages on ACTIVE HANDLES and ACTIVE CONNECTORS are tested one at a time.

The ACTIVE HANDLE or ACTIVE CONNECTOR under test is FIXED in an apparatus similar to that shown in Figure 201.108, so that when the oscillating member of the apparatus is at the middle of its travel, the axis of the cord, where it leaves the part under test, is vertical and passes through the axis of oscillation. The cord is passed through an aperture 300 mm from the axis of oscillation and a weight equal to the cord and connector of the ACTIVE ACCESSORY is affixed to the cable below this aperture for the purpose of applying tension to the cord. The maximum diameter of the hole should not be more than 2 times the diameter of the cord.

Where an anchorage of the ACTIVE HANDLE or ACTIVE CONNECTOR under test is fitted with two or more cords, these shall be tested together, with the total weight affixed to the anchorage being the sum of the weights required to be applied to each cord individually.

The oscillating member is rotated through an angle of 90 ° (45 ° on each side of the vertical).

The number of cycles applied to cable anchorages of ACTIVE HANDLES shall be 10 000 (200 for ACTIVE ACCESSORIES marked for single use only) at the rate of approximately 30 cycles per minute. The number of cycles applied to anchorages of cables of ACTIVE CONNECTORS shall be 5 000 (100 for ACTIVE ACCESSORIES marked for single use only) at the rate of approximately 30 cycles per minute.

After the test, the cord shall not have worked loose nor shall it show any damage. For multi-conductor cables there shall be no short circuits between individual conductors. The tensioning weight shall be increased to 1 kg and individual conductors checked for continuity using a DC, current not in excess of 1 A.

Documents
Document Sharing Hub

Full document details: IEC 60601-2-2 2017 RLV

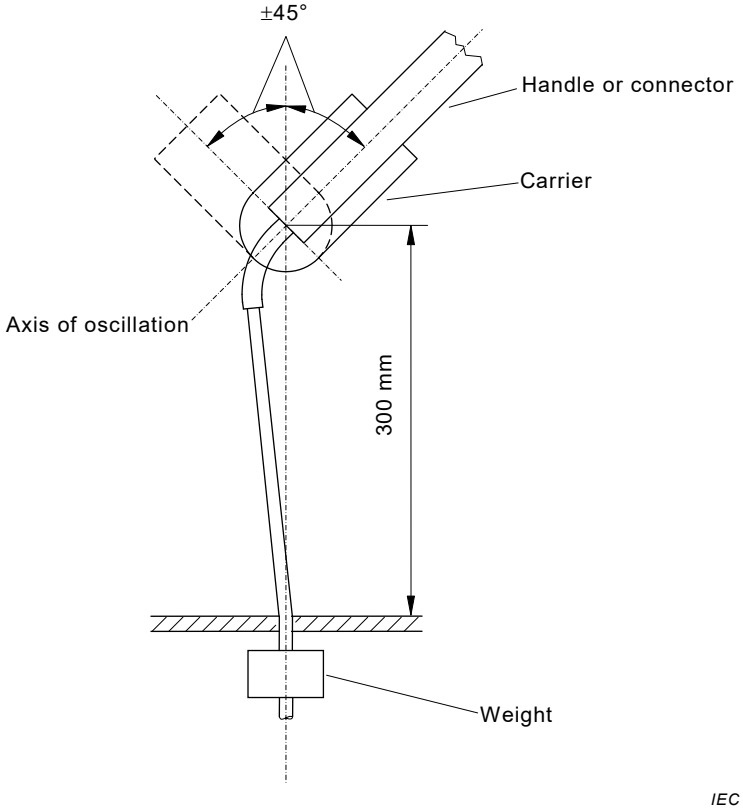

Figure 201.108 – Test apparatus for anchorages of cords of ACTIVE ACCESSORY

Additional subclauses:

201.8.10.4.101 * SWITCH SENSORS

201.8.10.4.101.1 General

Except where provided for in subclause 201.8.10.4.101.2, HF SURGICAL EQUIPMENT and applicable ASSOCIATED EQUIPMENT shall be provided with a SWITCH SENSOR requiring continuous activation in order to energize the ACTIVE OUTPUT TERMINALS.

The SWITCH SENSOR for cord-connected ACTIVE ACCESSORIES shall be supplied from a power source isolated from the MAINS PART and from earth, having a voltage not exceeding 12 V, if a CONDUCTIVE CONNECTION to the APPLIED PART exists, and not exceeding 24 V AC or 34 V DC in other cases.

NOTE 1 This requirement applies to voltages appearing within SWITCH SENSORS. Common-mode HF voltages ~~should be~~ are disregarded.

Under SINGLE FAULT CONDITION the SWITCH SENSOR shall not cause low-frequency PATIENT LEAKAGE CURRENT (S) exceeding the allowable limits (see 201.8.7.3).

Compliance is checked by inspection, functional check, and by measurement of voltage and LEAKAGE CURRENT (S).

Where the SWITCH SENSOR is provided with input terminals intended for connection to external electrical switch contacts, it shall not be possible to activate any output of the HF SURGICAL EQUIPMENT when the input terminals are bridged by a resistance equal to or greater than 1 000 Ω.

Compliance is checked by a functional test.

Documents
Document Sharing Hub
Full document details: IEC 60601-2-2 2017 RLV

Each SWITCH SENSOR shall activate only its intended single ACTIVE OUTPUT TERMINAL and shall control no more than one HF SURGICAL MODE at any one time.

NOTE 2 For the purpose of this requirement the two arms of a rocker style switch are considered to be two individual switches.

201.8.10.4.101.2 Non-continuous activation

Non-continuous activation mode of the SWITCH SENSOR is accepted only if

a) the output of the HF SURGICAL EQUIPMENT is automatically stopped in accordance with the specific application of the equipment;

b) a visible indicator is provided to indicate to the OPERATOR that the HF SURGICAL EQUIPMENT is set to such a specific application mode, and

c) a means of manual output deactivation is provided.

Compliance is checked by inspection of ACCOMPANYING DOCUMENTS and functional test.

201.8.10.4.101.3 Impedance sensing activation

A SWITCH SENSOR which is intended to activate HF output in response to the impedance appearing between ~~BIPOLAR~~ ACTIVE OUTPUT TERMINALS is acceptable only for BIPOLAR COAGULATION.

Where such an impedance-sensing SWITCH SENSOR is provided as an alternative or in addition to a contact-closure sensing SWITCH SENSOR, then

a) it shall not be possible under any conditions for HF output to be energized solely as a result of interruption and restoration of the SUPPLY MAINS, and

b) impedance-sensing activation shall be enabled only in response to a specific OPERATOR selection, and

c) that selection shall be visibly indicated to the OPERATOR.

Impedance sensing SWITCH SENSORS shall not be permitted for MONOPOLAR HF output activation. The requirements of this subclause do not apply to SWITCH SENSORS which are capable only of automatically terminating HF output according to the purpose of specific application modes (see 201.8.10.4.101.2 a)).

Compliance is checked by inspection of ACCOMPANYING DOCUMENTS and functional test.

201.8.10.4.101.4 Footswitches

Footswitches shall comply with the following requirement (see also 201.11.6.5 and 201.12.2).

The force required to actuate the switch shall be not less than 10 N, applied over an area of 625 mm^2 anywhere on the operating surface of the footswitch.

Compliance is checked by measurement of the actuating force.

201.9 Protection against MECHANICAL HAZARDS of ME EQUIPMENT and ME SYSTEMS

Clause 9 of the general standard applies.

201.10 Protection against unwanted and excessive radiation HAZARDS

Clause 10 of the general standard applies.

Documents
Document Sharing Hub
Full document details: IEC 60601-2-2 2017 RLV

201.11 Protection against excessive temperatures and other HAZARDS

Clause 11 of the general standard applies, except as follows:

201.11.1.1 * Maximum temperature during NORMAL USE

Addition:

~~Duty cycle:~~ HF SURGICAL EQUIPMENT, set up to deliver its RATED OUTPUT POWER into a resistive load using the electrode cable, is operated for 1 h with a DUTY CYCLE as specified by the MANUFACTURER but with operating times of at least 10 s alternating with a resting time of not more than 30 s.

201.11.1.2.1 APPLIED PARTS intended to supply heat to a PATIENT

Addition:

ACTIVE ELECTRODES are considered to be APPLIED PARTS intended to supply heat to a PATIENT as part of their intended clinical effect (CUTTING and COAGULATION). Disclosure of temperatures and clinical effects is not required.

201.11.1.2.2 APPLIED PARTS not intended to supply heat to a PATIENT

Addition:

NEUTRAL ELECTRODES are considered to be APPLIED PARTS not intended to supply heat to a PATIENT (see 201.12.4.101 and 201.15.101.5).

201.11.6.3 * Spillage on ME EQUIPMENT and ME SYSTEMS

Replacement:

The ENCLOSURE of the HF SURGICAL EQUIPMENT and ASSOCIATED EQUIPMENT shall be constructed so that liquid spillage in NORMAL USE does not wet electrical insulation or other components which, when wetted, are likely to affect adversely the safety of the HF SURGICAL EQUIPMENT and ASSOCIATED EQUIPMENT.

Compliance is checked by the following test.

A quantity of one litre of water is poured steadily onto the middle of the top surface of the HF SURGICAL EQUIPMENT and ASSOCIATED EQUIPMENT over a period of 15 s. HF SURGICAL EQUIPMENT and ASSOCIATED EQUIPMENT intended to be built into a wall or cabinet is tested mounted as recommended, the water being poured onto the wall above the control panel. After this treatment, the HF SURGICAL EQUIPMENT and ASSOCIATED EQUIPMENT shall withstand the dielectric strength test specified in 201.8.8.3, and inspection shall show that water which may have entered the ENCLOSURE cannot adversely affect the safety of the HF SURGICAL EQUIPMENT and ASSOCIATED EQUIPMENT. In particular, there shall be no trace of water on the insulation for which CREEPAGE DISTANCES are specified in 8.9.1 of the general standard.

201.11.6.5 Ingress of water or particulate matter into ME EQUIPMENT and ME SYSTEMS

Addition:

a) * The electrical switching parts of footswitches for HF SURGICAL EQUIPMENT and ASSOCIATED EQUIPMENT intended for use in operating rooms shall be protected against the effects of ingress of liquids that might cause inadvertent energization of the APPLIED PART.

   Compliance is checked by the following test.

AVA Documents
Document Sharing Hub

Full document details: IEC 60601-2-2 2017 RLV

The footswitch shall be completely immersed in 0,9 % saline to a depth of 150 mm for a period of 30 min. While immersed, it shall be connected to a SWITCH SENSOR corresponding to its NORMAL USE and actuated 50 times. The SWITCH SENSOR shall register deactivation upon each release.

b) * The electrical parts of FINGERSWITCHES shall be protected against the effects of ingress of liquids that might cause inadvertent energization of the APPLIED PART (see also 201.8.8.3.103).

Compliance is checked by the following test.

The AC impedance of each of the switching terminals of the ACTIVE CONNECTOR shall be measured using a frequency of at least 1 kHz and a voltage of less than 12 V. The ACTIVE HANDLE is supported horizontally at least 50 mm above any surface with the switch activating parts uppermost. One litre of 0,9 % saline solution is poured steadily from above over the ACTIVE HANDLE over a period of 15 s so as to wet the entire length of the ACTIVE HANDLE. The liquid is allowed to drain away freely. The AC impedance of the switching terminals shall remain greater than 2 000 Ω.

Immediately after, each FINGERSWITCH is operated and released 10 times. The AC impedance of the switching terminals shall exceed 2 000 Ω within 0,5 s after each release.

201.11.6.7 * Sterilization of ME EQUIPMENT and ME SYSTEMS

Addition:

Unless marked for single use only, ACTIVE ACCESSORIES and all detachable parts thereof, except ACTIVE CONNECTORS detachable from cords without use of TOOLS, shall comply with the requirements of this particular standard after being tested according to this subclause of the general standard.

201.11.8 Interruption of the power supply / SUPPLY MAINS to ME EQUIPMENT

Addition:

When HF SURGICAL EQUIPMENT is switched off and on again or when the SUPPLY MAINS is interrupted and re-established

– the output power for a given setting of the output control shall not increase by more than 20 %, and
– the HF SURGICAL MODE shall not be changed except to a stand-by mode in which no output is produced.

Compliance is checked by measurement of the power, averaged over a period of 1 s, and observation of the operating mode

a) with repeated operation of the mains switch of the HF SURGICAL EQUIPMENT;

b) with interruption and re-establishment of the SUPPLY MAINS, the switch in the HF SURGICAL EQUIPMENT being left in the "ON" position.

201.12 Accuracy of controls and instruments and protection against hazardous outputs

Clause 12 of the general standard applies, except as follows:

201.12.1 Accuracy of controls and instruments

Additional subclauses:

Documents
Document Sharing Hub
Full document details: IEC 60601-2-2 2017 RLV

201.12.1.101 Accuracy of output control setting

For output powers in excess of 10 % of the RATED OUTPUT POWER, the actual power as a function of the load resistance and output control setting shall not deviate from that shown in the diagrams specified in 201.7.9.3.1 by more than ± 20 %.

Compliance is checked by performing the test of 201.12.1.102 but using appropriate values of load resistance.

201.12.1.102 Monotonicity of output control setting

The output power shall not increase with the decrease of the output control setting (see 201.7.9.3.1, Figure 201.109 and Figure 201.110).

Compliance is checked by the following test:

*a) * MONOPOLAR outputs*

The output power as a function of the output control setting is measured at a minimum of five particular values of the load resistance, including 100 Ω, 200 Ω, 500 Ω, 1 000 Ω, 2 000 Ω and at the RATED LOAD. ACTIVE ACCESSORIES and NEUTRAL ELECTRODES supplied with HF SURGICAL EQUIPMENT or 3 m lengths of insulated conductors shall be used for connection of the load resistors.

Documents
Document Sharing Hub

Full document details: IEC 60601-2-2 2017 RLV

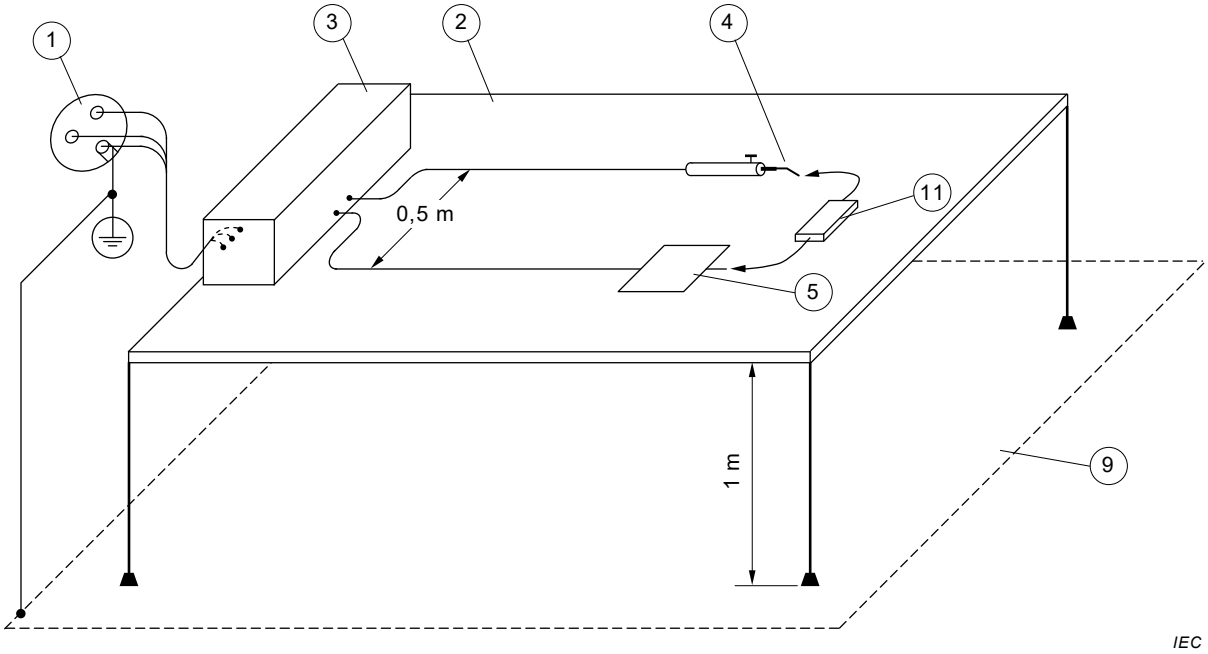

Key

1 SUPPLY MAINS
2 Table, made of insulating material
3 HF SURGICAL EQUIPMENT
4 ACTIVE ELECTRODE
5 NEUTRAL ELECTRODE, metallic or in contact with metal foil of the same size
9 Earthed conductive plane
11 Load resistance as required with HF power measuring device

Figure 201.109 – Measurement of output power – MONOPOLAR output

*b) * BIPOLAR outputs*

The output power as a function of the output control setting is measured at a minimum of five particular values of the load resistance, including 10 Ω, 50 Ω, 200 Ω, 500 Ω, 1 000 Ω and at the RATED LOAD. The BIPOLAR cord supplied with the HF SURGICAL EQUIPMENT or a 3 m length of two conductor insulated cord RATED 600 V or greater shall be used for the connection of the load resistors.

MANUFACTURERS shall provide specific instructions on how to set up these measurements on alternate forms of BIPOLAR ~~ELECTRODES~~ ACCESSORIES.

Documents
Document Sharing Hub
Full document details: IEC 60601-2-2 2017 RLV

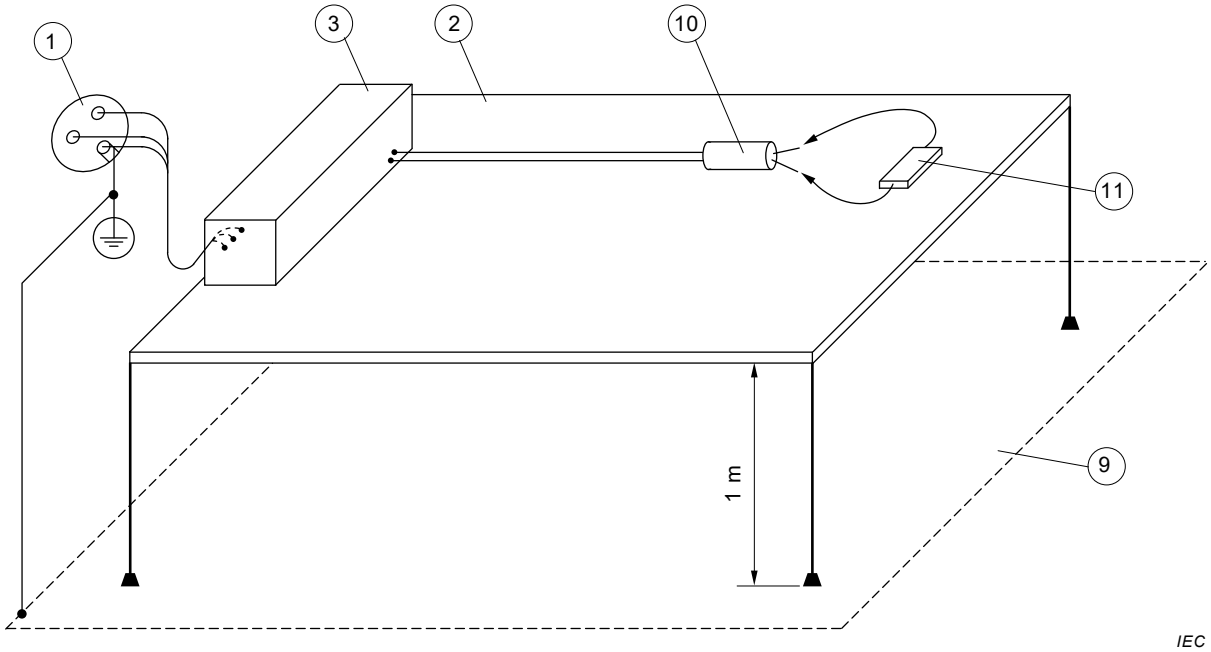

Key

1 SUPPLY MAINS
2 Table, made of insulating material
3 HF SURGICAL EQUIPMENT
9 Earthed conductive plane
10 Activated BIPOLAR ~~ELECTRODE~~ ACCESSORY
11 Load resistance as required with HF power measuring device

Figure 201.110 – Measurement of output power – BIPOLAR output

201.12.1.103 * Accuracy of MAXIMUM OUTPUT VOLTAGE

For each HF SURGICAL MODE available in HF SURGICAL EQUIPMENT, the MAXIMUM OUTPUT VOLTAGE applied to the ACTIVE OUTPUT TERMINALS shall not exceed that specified in 201.7.9.3.1.

Compliance is checked by use of an oscilloscope. See also 201.5.4 aa). Measurements shall be taken at the output setting and load condition which yields the highest peak output voltage for each HF SURGICAL MODE.

201.12.2 Usability of ME EQUIPMENT

Addition:

a) Where a double footswitch assembly is used to select CUTTING and COAGULATION output modes, the arrangement shall be such that, when viewed by the OPERATOR, the left pedal activates CUTTING and the right pedal activates COAGULATION.

Compliance is checked by inspection.

b) * In an ACTIVE HANDLE which incorporates separate FINGERSWITCHES for selectively activating CUTTING and COAGULATION HF SURGICAL MODES, that which activates CUTTING shall be nearer to the ACTIVE ELECTRODE than is the other.

Compliance is checked by inspection.

c) It shall not be possible to energize simultaneously more than one ACTIVE OUTPUT TERMINAL, unless:

1) each ACTIVE OUTPUT TERMINAL has independent sets of controls for selection of HF SURGICAL MODE, HF output setting and independent SWITCH SENSORS,

AVA Documents Document Sharing Hub

or

2) two MONOPOLAR ACTIVE OUTPUT TERMINALS have independent SWITCH SENSORS and share a common FULGURATION output.

Compliance is checked by inspection and functional check.

d) * During simultaneous activation the audible tone shall be different from the tone produced during single output activation. See also 201.12.4.2.101. Under no circumstances shall any PATIENT circuit become energized by more than is defined in 201.8.7.3.101 c), unless the output for that PATIENT circuit is activated by the OPERATOR.

Compliance is checked by inspection and functional check.

e) * ACTIVE OUTPUT TERMINALS on HF SURGICAL EQUIPMENT and ASSOCIATED EQUIPMENT shall differ in configuration sufficiently such that MONOPOLAR ACTIVE ACCESSORIES, NEUTRAL ELECTRODES and BIPOLAR ACTIVE ACCESSORIES cannot be improperly connected.

NOTE See Annex AA.

Compliance is checked by inspection.

f) * ACTIVE CONNECTORS having more than one pin shall have permanently FIXED pin spacing. “Flying leads” are prohibited.

Compliance is checked by inspection.

g) * Where more than one HF SURGICAL MODE can be energized by a single SWITCH SENSOR, an indication shall be provided to show which HF SURGICAL MODE is selected before an output is energized.

Compliance is checked by inspection and functional test.

201.12.4 Protection against hazardous output

Additional subclause:

201.12.4.101 * Use of HIGH CURRENT MODE

HF SURGICAL EQUIPMENT shall provide a means such that in HIGH CURRENT MODE, NEUTRAL ELECTRODE(S) shall be used which have sufficient current carrying capacity so as to ensure no unacceptable temperature rise. In doing so, the requirements of 201.15.101 shall be specifically analyzed in the RISK MANAGEMENT FILE for the HIGH CURRENT MODE conditions. This requirement shall be considered an ESSENTIAL PERFORMANCE requirement.

Compliance is checked by inspection of the MANUFACTURER’S documentation and RISK MANAGEMENT FILE.

201.12.4.2 * Indication ~~of parameters~~ relevant to safety

Addition:

If the total output power in any HF SURGICAL MODE, including simultaneous activation of independent outputs if available, exceeds 400 W averaged over any period of 1 s when each of the outputs is terminated at the RATED LOAD, then special consideration of potential HAZARDS shall be addressed in the RISK MANAGEMENT FILE, especially with regard to NEUTRAL ELECTRODES.

Compliance is checked by measurement.

Additional subclause:

201.12.4.2.101 Output indicator

HF SURGICAL EQUIPMENT shall be provided with a device which gives an audible signal when any output circuit is energized by the operation of a SWITCH SENSOR or as a result of a SWITCH

AVA Documents
Document Sharing Hub
Full document details: IEC 60601-2-2 2017 RLV

FAULT CONDITION. The sound output shall have its major energy content in the band of frequencies between 100 Hz and 3 kHz. The sound source shall be capable of producing a sound level of at least 65 dBA at a distance of 1 m from the HF SURGICAL EQUIPMENT according to the one direction specified by the MANUFACTURER. An accessible sound level control may be provided, but shall not reduce the sound level below 40 dBA. For simultaneous activation see also 201.12.2 d).

In order that the OPERATOR may distinguish between the audible alarm called for in 201.8.4.101 and the signal specified above, either the former shall be pulsed or two different frequencies shall be employed.

NOTE This audible signal is not intended to meet the definition of ALARM SIGNAL in IEC 60601-1-8. See also Clause 208 of this document.

Compliance is checked by functional check and measurement of the sound level.

201.12.4.3 Accidental selection of excessive output values

Additional subclause:

201.12.4.3.101 * Output reduction means

Except as provided for in 201.7.9.2.2.101 a) item 7 and 201.7.9.3.1, for each HF SURGICAL MODE, HF SURGICAL EQUIPMENT shall incorporate means to enable the output power to be reduced to not more than 5 % of the RATED OUTPUT POWER or 10 W, whichever is smaller (see also 201.12.1.102).

Compliance is checked by measurement of output power and inspection.

201.12.4.4 Incorrect output

Additional subclauses:

201.12.4.4.101 * Maximum allowed output power in SINGLE FAULT CONDITIONS

MONOPOLAR HF SURGICAL EQUIPMENT having a RATED OUTPUT POWER greater than 50 W and all BIPOLAR outputs of HF EQUIPMENT shall be provided with an alarm and/or interlock system to indicate and/or prevent a significant increase in the output power relative to the output setting.

The maximum allowed output power under SINGLE FAULT CONDITIONS shall be calculated separately for each PATIENT CIRCUIT and operation mode.

The maximum allowed output power in SINGLE FAULT CONDITIONS is defined according to Table 201.102:

Table 201.102 – Maximum output powers in SINGLE FAULT CONDITIONS

Setting (range in % of RATED OUTPUT POWER)	Maximum allowed output power in SINGLE FAULT CONDITIONS
Less than 10	20 % of RATED OUTPUT POWER
10 to 25	Setting x 2
Greater than 25 and up to 80	Setting + 25 % of RATED OUTPUT POWER
Greater than 80 and up to 100	Setting + 30 % of RATED OUTPUT POWER

Compliance is checked by examination of the technical documentation and testing by simulation of appropriate SINGLE FAULT CONDITIONS.

AVA Documents
Document Sharing Hub

Full document details: IEC 60601-2-2 2017 RLV

201.12.4.4.102 * Output power during simultaneous activation

For HF SURGICAL EQUIPMENT providing simultaneous activation of more than one PATIENT circuit (see 201.12.2), the PATIENT circuits shall not deliver an output power that exceeds the range of deviation defined in 201.12.1.101 by more than 20 % when they are simultaneously activated under any available combination of HF SURGICAL MODES.

Any single activated PATIENT circuit shall comply with 201.12.1.101.

Compliance is checked by the following tests (see Figure 201.111).

For HF SURGICAL EQUIPMENT as defined in 201.12.2 c):

The output under test is activated at 20 % of its RATED OUTPUT POWER and the HF current reading of this output noted. Any other output is then activated at maximum power and the current of the output under test shall not increase by more than 10 %.

The output under test is activated at 50 % and at 100 % output settings and the current values noted. These values shall not increase by more than 10 % when the other output is activated additionally.

These tests are repeated with all possible combinations of outputs which may be activated together at any one time.

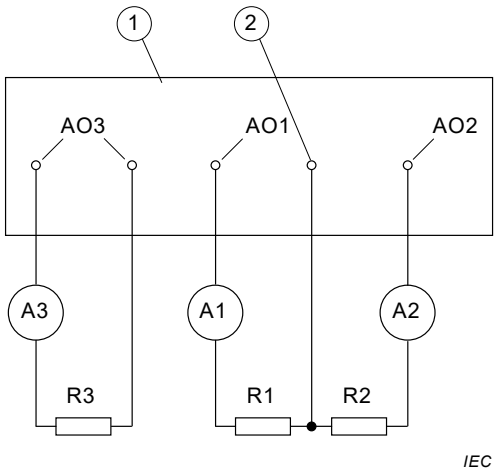

Key

1	HF SURGICAL EQUIPMENT
2	Connector for NEUTRAL ELECTRODE
R1	RATED LOAD for that active output
R2	RATED LOAD for that active output
R3	RATED LOAD for that active output
AO1	MONOPOLAR active output
AO2	MONOPOLAR active output
AO3	BIPOLAR active output

Figure 201.111 – Method of testing feedback from one active output to another in simultaneous activation

Documents
Document Sharing Hub
Full document details: IEC 60601-2-2 2017 RLV

201.13 HAZARDOUS SITUATIONS and fault conditions for ME EQUIPMENT

Clause 13 of the general standard applies, except as follows:

201.13.2.13 Overload

Additional subclause:

201.13.2.13.101 * Protection against the effects of short-circuiting of the electrodes

HF SURGICAL EQUIPMENT shall be capable of withstanding, without damage, the effects of short-circuiting or open-circuiting the output when energized at maximum output setting.

Compliance is checked by the following test.

Connect the conductors described in 201.12.1.102, items a) and b), to the PATIENT circuit connections and, for each HF SURGICAL MODE, set the output control to the maximum position. The output is then switched on, and the remote ends of the activated pair of conductors are short-circuited for a period of 5 s and then open-circuited for a period of 15 s. The output is then switched off for a period of 1 min. The above cycle is repeated for a total of 10 times.

After this test the HF SURGICAL EQUIPMENT shall comply with all the requirements of this particular standard.

201.14 PROGRAMMABLE ELECTRICAL MEDICAL SYSTEMS (PEMS)

Clause 14 of the general standard applies.

201.15 Construction of ME EQUIPMENT

Clause 15 of the general standard applies, except as follows:

201.15.4.1 Construction of connectors

Additional subclauses:

201.15.4.1.101 * Compatibility with third party ACTIVE ELECTRODES

The MANUFACTURER of an ACTIVE ACCESSORY with a detachable ACTIVE ELECTRODE shall provide upon request the dimensions and associated tolerances for the mating part of any ACTIVE ELECTRODE which is intended to be attached to the ACTIVE ACCESSORY.

Compliance is checked by inspection of the ACCOMPANYING DOCUMENTS.

The MANUFACTURER of an ACTIVE ACCESSORY with a detachable ACTIVE ELECTRODE shall specify in the ACCOMPANYING DOCUMENTS the ACTIVE ELECTRODES with which it is intended to be compatible.

Compliance is checked by demonstrating conformance with all relevant requirements of this particular standard.

201.15.4.1.102 * Retention of detachable ACTIVE ELECTRODES

The MANUFACTURER of a detachable ACTIVE ELECTRODE shall specify in its ACCOMPANYING DOCUMENTS the ACTIVE ACCESSORIES with which it is intended to be used.

AVA Documents
Document Sharing Hub

Full document details: IEC 60601-2-2 2017 RLV

The detachable ACTIVE ELECTRODE shall fit securely into the specified ACTIVE ACCESSORIES.

Compliance shall be checked by inspection and by the following test:

The detachable ACTIVE ELECTRODE is inserted ten times into a specified ACTIVE ACCESSORY. Afterwards, the ACTIVE ELECTRODE shall not detach when subjected to a pull equivalent to ten times the weight of the ACTIVE ELECTRODE up to a maximum of 10 N for one minute along the axis of insertion.

When a detachable ACTIVE ELECTRODE is inserted into a specified ACTIVE ACCESSORY, the combination shall conform to all other applicable requirements of this particular standard.

Additional subclauses:

201.15.101 * NEUTRAL ELECTRODES

201.15.101.1 General requirements for NEUTRAL ELECTRODES

Except for any PATIENT circuit intended only for connection to a BIPOLAR~~ ELECTRODE~~ ACCESSORY, HF SURGICAL EQUIPMENT having a RATED OUTPUT POWER in excess of 50 W shall be provided with a NEUTRAL ELECTRODE connection.

Compliance is checked by inspection.

201.15.101.2 * NE cord attachment

The NEUTRAL ELECTRODE shall be reliably connected to the cord. Except for a MONITORING NE, any current used for monitoring the electrical continuity of the electrode cord and its connections shall pass through a section of the electrode.

Compliance is checked by the following test.

An electrical continuity test is conducted using a current of at least 1 A but not more than 5 A from a DC or mains frequency current source with a no-load voltage not exceeding 6 V. The resistance shall be 1 Ω or less.

201.15.101.3 * NE cord connector~~, no conductive parts on PATIENT~~

Any contacts of the electrical connector of an NE cord for attachment to a detachable NE shall be designed so that their conductive parts cannot come into contact with the body of the PATIENT in the event of inadvertent disconnection.

Compliance is checked by the following test.

The NE cord is detached from the NE and, using the standard test finger shown in Figure 6 of the general standard, it is verified that contact with conductive parts of the cable connector is not possible.

201.15.101.4 * NE cord insulation

The insulation of NE cords shall be adequate to prevent a burn injury to the PATIENT and the OPERATOR.

Compliance is checked by application of the following tests in the order shown:

– *HF leakage test according to 201.8.8.3.102 a) with a test voltage [U_{peak}] of 400 V_{peak}. HF LEAKAGE CURRENT shall not exceed*

$$I_{leakage}\ [\text{mA}] = \cancel{1{,}8}\ 4{,}0 \times 10^{-5} \times d \times L \times f_{test} \times U_{peak}$$

Documents
Document Sharing Hub

or alternatively the HF leakage capacitance test according to 201.8.8.3.102 b). The HF leakage capacitance shall not exceed

$$C_{leakage}\ [pF] = \cancel{4}\ 8{,}8 \times d \times L$$

where

d is the smallest outer dimension of the insulation, in mm, and

L is the length of sample insulation immersed in saline bath, in cm;

– *HF dielectric strength test according to 201.8.8.3.103 with an HF test voltage of 500 V_{peak}. No breakdown of the insulation shall occur;*

– *mains frequency dielectric strength test according to 201.8.8.3.104 with a test voltage of 2 100 V_{peak}. No breakdown of the insulation shall occur.*

201.15.101.5 * NE thermal performance

An NE shall not subject a PATIENT to a RISK of thermal injury at the NE application site under conditions of NORMAL USE and when applied in accordance with instructions for use.

Compliance for conventional NEUTRAL ELECTRODES is checked by the following test.

NOTE A conventional NEUTRAL ELECTRODE is one that is not suitable for use with a HIGH CURRENT MODE.

For an NE with the PATIENT weight range marked as follows, the maximum temperature rise of any 1 cm square area under and extending 1 cm beyond the NE contact site on a PATIENT shall not exceed 6 °C immediately after a 60 s application of the specified test current, I_{test}.

Table 201.103 – Test currents by weight range

PATIENT weight range	I_{test} mA
< 5 kg	350
5 kg to 15 kg	500
> 15 kg or unspecified	700

For all MONITORING NE the contact area shall be A_a, the alarm area, as evaluated in the compliance test for subclause 201.8.4.101.

For all other NE the contact area shall be the area of the NE when applied according to the instructions for use.

For NEs intended for use on small PATIENTS, these tests may be performed on live adult subjects. The test surface to which the NE under test is applied shall be the skin of human subjects, or electrically and thermally equivalent surrogate media or test devices. These tests shall be repeated using a minimum of four different samples of the NE under test on each human subject or surrogate media. Where a surrogate medium or test device is used, at least 10 different samples of the NE shall be tested. Each of these at least 10 different samples shall be tested with the alarm area A_a from another human subject. For each human subject the test shall be performed with the individual alarm area A_a, as evaluated in the compliance test for subclause 201.8.4.101. The alarm area A_a can also be determined by means of a test device if such test device has a CQM simulation circuit.

The NE and test surface temperatures of surrogate media or test devices shall be 23 ± 2 °C, and a reference temperature scan of the test surface shall be recorded immediately prior to application of the NE to the test surface. The NE shall be applied to the test surface in accordance with supplied instructions for use, except that contact area shall be A_a. The NE shall rest on the test surface for 30 min in a stable temperature environment before the

AVA Documents Document Sharing Hub

Full document details: IEC 60601-2-2 2017 RLV

application of the test current. If a thermally equivalent surrogate medium or test device is used the test may commence once thermal equilibrium is achieved.

The test current, I_{test}, applied to the electrode under test shall have an approximately sinusoidal HF waveform, and ~~must~~ shall be attained within 5 s of the beginning of the test and maintained between 100 % and 110 % of I_{test} for 60 s ± 1 s.

A second temperature scan of the test surface shall be completed within 15 s following cessation of the test current. Upon comparison with the reference scan, the temperature rise of any 1 cm square area shall not exceed 6 °C.

The temperature scanning apparatus shall have an accuracy of better than 0,5 °C and a spatial resolution of at least one sample per square cm over the entire NE contact area plus the area extending 1 cm beyond the edge of that area. Spatial correlation between the reference and second temperature scans shall be within ± 1,0 cm.

Where human subjects are employed, they shall comprise a pool of at least five males and five females having a variety of skin tissue morphologies, i.e. thin, average and thick layers of subcutaneous body fat.

Any surrogate medium or test device shall bear documented evidence that it is expected to yield temperature rise results no smaller than those from this test protocol as applied to at least 20 human subjects.

201.15.101.6 * NE contact impedance

The impedance of the electrical contact between the surface of the NE application site and the NE cord connection, within 5 cm of its connection to the NE conductive surface, shall be low enough to prevent a RISK of PATIENT burn due to ohmic heating during passage of HF surgical current.

For conductive NE, contact impedance shall not exceed 50 Ω, and for capacitive NEs, contact capacitance shall be no less than 4 nF over the frequency range of 200 kHz to 5 MHz.

NOTE For purposes of this document, unless otherwise specified by the MANUFACTURER, a conductive NE presents a contact impedance with a phase angle of less than 45° at 200 kHz, and a capacitive NE a 200 kHz phase angle of 45° or greater.

Compliance is checked by the following test using at least 10 random samples of the NE under test.

The NE under test is placed in full and firm contact on a flat metallic plate. A true RMS responding AC voltmeter having ~~an input impedance greater than 2 kΩ and~~ an accuracy of better than 5 % over the 200 kHz to 5 MHz range is connected between the plate and the NE cord conductors, within 5 cm of their attachment to the conductive surface of the NE, in order to measure voltage U_{test}. An essentially sinusoidal test current, I_{test}, of approximately 200 mA and frequency f_{test} in the range of 200 kHz to 5 MHz is passed between the NE cord and the plate and monitored by use of a suitable true RMS AC ammeter.

U_{test} and I_{test} are recorded at f = 200 kHz, 500 kHz, 1 MHz, 2 MHz and 5 MHz. For each f_{test}, contact impedance Z_c is computed as:

$$Z_c = \frac{U_{test}}{I_{test}}$$

and contact capacitance C_c is computed as:

Documents
Document Sharing Hub
Full document details: IEC 60601-2-2 2017 RLV