IEC 60601-2-29

Edition 3.0 2008-06

INTERNATIONAL STANDARD

NORME INTERNATIONALE

Medical electrical equipment – Part 2-29: Particular requirements for the basic safety and essential performance of radiotherapy simulators

Appareils électromédicaux – Partie 2-29: Exigences particulières pour la sécurité de base et les performances essentielles des simulateurs de radiothérapie

IEC 60601-2-29:2008

Documents
Document Sharing Hub

Full document details: IEC 60601-2-29 2008

THIS PUBLICATION IS COPYRIGHT PROTECTED

Copyright © 2008 IEC, Geneva, Switzerland

All rights reserved. Unless otherwise specified, no part of this publication may be reproduced or utilized in any form or by any means, electronic or mechanical, including photocopying and microfilm, without permission in writing from either IEC or IEC's member National Committee in the country of the requester.
If you have any questions about IEC copyright or have an enquiry about obtaining additional rights to this publication, please contact the address below or your local IEC member National Committee for further information.

Droits de reproduction réservés. Sauf indication contraire, aucune partie de cette publication ne peut être reproduite ni utilisée sous quelque forme que ce soit et par aucun procédé, électronique ou mécanique, y compris la photocopie et les microfilms, sans l'accord écrit de la CEI ou du Comité national de la CEI du pays du demandeur.
Si vous avez des questions sur le copyright de la CEI ou si vous désirez obtenir des droits supplémentaires sur cette publication, utilisez les coordonnées ci-après ou contactez le Comité national de la CEI de votre pays de résidence.

IEC Central Office
3, rue de Varembé
CH-1211 Geneva 20
Switzerland
Email: inmail@iec.ch
Web: www.iec.ch

About the IEC

The International Electrotechnical Commission (IEC) is the leading global organization that prepares and publishes International Standards for all electrical, electronic and related technologies.

About IEC publications

The technical content of IEC publications is kept under constant review by the IEC. Please make sure that you have the latest edition, a corrigenda or an amendment might have been published.

- Catalogue of IEC publications: www.iec.ch/searchpub
The IEC on-line Catalogue enables you to search by a variety of criteria (reference number, text, technical committee,…). It also gives information on projects, withdrawn and replaced publications.
- IEC Just Published: www.iec.ch/online_news/justpub
Stay up to date on all new IEC publications. Just Published details twice a month all new publications released. Available on-line and also by email.
- Electropedia: www.electropedia.org
The world's leading online dictionary of electronic and electrical terms containing more than 20 000 terms and definitions in English and French, with equivalent terms in additional languages. Also known as the International Electrotechnical Vocabulary online.
- Customer Service Centre: www.iec.ch/webstore/custserv
If you wish to give us your feedback on this publication or need further assistance, please visit the Customer Service Centre FAQ or contact us:
Email: csc@iec.ch
Tel.: +41 22 919 02 11
Fax: +41 22 919 03 00

A propos de la CEI

La Commission Electrotechnique Internationale (CEI) est la première organisation mondiale qui élabore et publie des normes internationales pour tout ce qui a trait à l'électricité, à l'électronique et aux technologies apparentées.

A propos des publications CEI

Le contenu technique des publications de la CEI est constamment revu. Veuillez vous assurer que vous possédez l'édition la plus récente, un corrigendum ou amendement peut avoir été publié.

- Catalogue des publications de la CEI: www.iec.ch/searchpub/cur_fut-f.htm
Le Catalogue en-ligne de la CEI vous permet d'effectuer des recherches en utilisant différents critères (numéro de référence, texte, comité d'études,…). Il donne aussi des informations sur les projets et les publications retirées ou remplacées.
- Just Published CEI: www.iec.ch/online_news/justpub
Restez informé sur les nouvelles publications de la CEI. Just Published détaille deux fois par mois les nouvelles publications parues. Disponible en-ligne et aussi par email.
- Electropedia: www.electropedia.org
Le premier dictionnaire en ligne au monde de termes électroniques et électriques. Il contient plus de 20 000 termes et définitions en anglais et en français, ainsi que les termes équivalents dans les langues additionnelles. Egalement appelé Vocabulaire Electrotechnique International en ligne.
- Service Clients: www.iec.ch/webstore/custserv/custserv_entry-f.htm
Si vous désirez nous donner des commentaires sur cette publication ou si vous avez des questions, visitez le FAQ du Service clients ou contactez-nous:
Email: csc@iec.ch
Tél.: +41 22 919 02 11
Fax: +41 22 919 03 00

Documents
Document Sharing Hub

Full document details: IEC 60601-2-29 2008

IEC 60601-2-29

Edition 3.0 2008-06

INTERNATIONAL STANDARD

NORME INTERNATIONALE

Medical electrical equipment – Part 2-29: Particular requirements for the basic safety and essential performance of radiotherapy simulators

Appareils électromédicaux – Partie 2-29: Exigences particulières pour la sécurité de base et les performances essentielles des simulateurs de radiothérapie

INTERNATIONAL ELECTROTECHNICAL COMMISSION

COMMISSION ELECTROTECHNIQUE INTERNATIONALE

PRICE CODE
CODE PRIX

T

ICS 11.040.60

ISBN 2-8318-9854-4

Documents
Document Sharing Hub

Full document details: IEC 60601-2-29 2008

CONTENTS

FOREWORD 3
INTRODUCTION 5

201.1 Scope, object and related standards 6
201.2 Normative references 7
201.3 Terms and definitions 8
201.4 General requirements 8
201.5 General requirements for testing of ME EQUIPMENT 8
201.6 Classification of ME EQUIPMENT and ME SYSTEMS 8
201.7 ME EQUIPMENT identification, marking and documents 9
201.8 Protection against electrical HAZARDS from ME EQUIPMENT 11
201.9 Protection against mechanical HAZARDS of ME EQUIPMENT and ME SYSTEMS 11
201.10 Protection against unwanted and excessive radiation HAZARDS 18
201.11 Protection against excessive temperatures and other HAZARDS 18
201.12 Accuracy of controls and instruments and protection against hazardous outputs 19
201.13 HAZARDOUS SITUATIONS and fault conditions 19
201.14 PROGRAMMABLE ELECTRICAL MEDICAL SYSTEMS (PEMS) 19
201.15 Construction of ME EQUIPMENT 19
201.16 ME SYSTEMS 19
201.17 Electromagnetic compatibility of ME EQUIPMENT and ME SYSTEMS 19
Annex C (informative) Guide to marking and labelling requirements for ME EQUIPMENT and ME SYSTEMS 20
Annex AA (informative) Particular guidance and rationale 21
Bibliography 22
Index of defined terms used in this particular standard 23

Figure 101 – Equipment movements and scales – Rotary GANTRY with identification of axes 1 to 8, directions 9 to 13, and dimensions 14 and 15 (see accompanying table) 14
Figure 102 – Equipment movements and scales – ISOCENTRIC RADIOTHERAPY SIMULATOR or TELERADIOTHERAPY ME EQUIPMENT, with identification of axes 1; 4 to 6; 19, of directions 9 to 12; 16 to 18 and of dimensions 14; 15 (see accompanying table) 15
Figure 103 – Equipment movements and scales – View from RADIATION SOURCE of TELERADIOTHERAPY RADIATION FIELD or RADIOTHERAPY SIMULATOR DELINEATED RADIATION FIELD (see accompanying table) 16

Table 201.101 – Description of equipment movements 17
Table 201.C.101 – ACCOMPANYING DOCUMENTS, General 20
Table 201.C.102 – ACCOMPANYING DOCUMENTS, Instructions for use 20
Table 201.C.103 – ACCOMPANYING DOCUMENTS, technical description 20

Documents
Document Sharing Hub
Full document details: IEC 60601-2-29 2008

INTERNATIONAL ELECTROTECHNICAL COMMISSION

MEDICAL ELECTRICAL EQUIPMENT –

Part 2-29: Particular requirements for the basic safety and essential performance of radiotherapy simulators

FOREWORD

1) The International Electrotechnical Commission (IEC) is a worldwide organization for standardization comprising all national electrotechnical committees (IEC National Committees). The object of IEC is to promote international co-operation on all questions concerning standardization in the electrical and electronic fields. To this end and in addition to other activities, IEC publishes International Standards, Technical Specifications, Technical Reports, Publicly Available Specifications (PAS) and Guides (hereafter referred to as "IEC Publication(s)"). Their preparation is entrusted to technical committees; any IEC National Committee interested in the subject dealt with may participate in this preparatory work. International, governmental and non-governmental organizations liaising with the IEC also participate in this preparation. IEC collaborates closely with the International Organization for Standardization (ISO) in accordance with conditions determined by agreement between the two organizations.
2) The formal decisions or agreements of IEC on technical matters express, as nearly as possible, an international consensus of opinion on the relevant subjects since each technical committee has representation from all interested IEC National Committees.
3) IEC Publications have the form of recommendations for international use and are accepted by IEC National Committees in that sense. While all reasonable efforts are made to ensure that the technical content of IEC Publications is accurate, IEC cannot be held responsible for the way in which they are used or for any misinterpretation by any end user.
4) In order to promote international uniformity, IEC National Committees undertake to apply IEC Publications transparently to the maximum extent possible in their national and regional publications. Any divergence between any IEC Publication and the corresponding national or regional publication shall be clearly indicated in the latter.
5) IEC provides no marking procedure to indicate its approval and cannot be rendered responsible for any equipment declared to be in conformity with an IEC Publication.
6) All users should ensure that they have the latest edition of this publication.
7) No liability shall attach to IEC or its directors, employees, servants or agents including individual experts and members of its technical committees and IEC National Committees for any personal injury, property damage or other damage of any nature whatsoever, whether direct or indirect, or for costs (including legal fees) and expenses arising out of the publication, use of, or reliance upon, this IEC Publication or any other IEC Publications.
8) Attention is drawn to the Normative references cited in this publication. Use of the referenced publications is indispensable for the correct application of this publication.
9) Attention is drawn to the possibility that some of the elements of this IEC Publication may be the subject of patent rights. IEC shall not be held responsible for identifying any or all such patent rights.

International standard IEC 60601-2-29 has been prepared by IEC subcommittee 62C: Equipment for radiotherapy, nuclear medicine and radiation dosimetry, of IEC technical committee 62: Electrical equipment in medical practice.

This third edition cancels and replaces the second edition published in 1999. This edition constitutes a technical revision, which brings this standard in line with the third edition of IEC 60601-1 and its collateral standards.

The text of this particular standard is based on the following documents:

CDV	Report on voting
62C/423/CDV	62C/434/RVC

Full information on the voting for the approval of this particular standard can be found in the report on voting indicated in the above table.

Documents
Document Sharing Hub

Full document details: IEC 60601-2-29 2008

This publication has been drafted in accordance with the ISO/IEC Directives, Part 2.

In this standard, the following print types are used:

– Requirements and definitions: roman type.
– *Test specifications: italic type.*
– Informative material appearing outside of tables, such as notes, examples and references: in smaller type. Normative text of tables is also in a smaller type.
– TERMS DEFINED IN CLAUSE 3 OF THE GENERAL STANDARD, IN THIS PARTICULAR STANDARD OR AS NOTED: SMALL CAPITALS.

In referring to the structure of this standard, the term

– "clause" means one of the seventeen numbered divisions within the table of contents, inclusive of all subdivisions (e.g. Clause 7 includes subclauses 7.1, 7.2, etc.);
– "subclause" means a numbered subdivision of a clause (e.g. 7.1, 7.2 and 7.2.1 are all subclauses of Clause 7).

References to clauses within this standard are preceded by the term "Clause" followed by the clause number. References to subclauses within this particular standard are by number only.

In this standard, the conjunctive "or" is used as an "inclusive or" so a statement is true if any combination of the conditions is true.

The verbal forms used in this standard conform to usage described in Annex H of the ISO/IEC Directives, Part 2. For the purposes of this standard, the auxiliary verb:

– "shall" means that compliance with a requirement or a test is mandatory for compliance with this standard;
– "should" means that compliance with a requirement or a test is recommended but is not mandatory for compliance with this standard;
– "may" is used to describe a permissible way to achieve compliance with a requirement or test.

An asterisk (*) as the first character of a title or at the beginning of a paragraph or table title indicates that there is guidance or rationale related to that item in Annex A.

A list of all parts of the IEC 60601 series, published under the general title: *Medical electrical equipment*, can be found on the IEC website.

The committee has decided that the contents of this publication will remain unchanged until the maintenance result date indicated on the IEC web site under "http://webstore.iec.ch" in the data related to the specific publication. At this date, the publication will be

- reconfirmed,
- withdrawn,
- replaced by a revised edition, or
- amended.

Documents
Document Sharing Hub

Full document details: IEC 60601-2-29 2008

INTRODUCTION

This particular standard establishes requirements to be complied with by MANUFACTURERS in the design and construction of RADIOTHERAPY SIMULATORS; it does not attempt to define their optimum performance requirements. Its purpose is to identify those features of design that are regarded, at the present time, as essential for the safe operation of such ME EQUIPMENT. It places limits on the degradation of ME EQUIPMENT performance beyond which it can be presumed that a fault condition exists, for example a component failure, and where an INTERLOCK then operates to prevent continued operation of the ME EQUIPMENT.

Documents
Document Sharing Hub

Full document details: IEC 60601-2-29 2008

MEDICAL ELECTRICAL EQUIPMENT –

Part 2-29: Particular requirements for the basic safety and essential performance of radiotherapy simulators

201.1 Scope, object and related standards

Clause 1 of the general standard[1)] applies, except as follows:

201.1.1 Scope

Replacement:

This International Standard applies to the BASIC SAFETY and ESSENTIAL PERFORMANCE of RADIOTHERAPY SIMULATORS, hereafter referred to as ME EQUIPMENT.

If a clause or subclause is specifically intended to be applicable to ME EQUIPMENT only, or to ME SYSTEMS only, the title and content of that clause or subclause will say so. If that is not the case, the clause or subclause applies both to ME EQUIPMENT and to ME SYSTEMS, as relevant.

HAZARDS inherent in the intended physiological function of ME EQUIPMENT or ME SYSTEMS within the scope of this standard are not covered by specific requirements in this standard except in 7.2.13 and 8.4.1 of the general standard.

NOTE See also 4.2 of the general standard.

201.1.2 Object

Replacement:

The object of this particular standard is to establish particular BASIC SAFETY and ESSENTIAL PERFORMANCE requirements for RADIOTHERAPY SIMULATORS [as defined in 201.3.204].

201.1.3 *Collateral standards

Addition:

This particular standard refers to those applicable collateral standards that are listed in Clause 2 of the general standard and Clause 2 of this particular standard.

The following collateral standard does not apply:

– IEC 60601-1-10.

201.1.4 Particular standards

Replacement:

In the IEC 60601 series, particular standards may modify, replace or delete requirements contained in the general standard and collateral standards as appropriate for the particular

1) The general standard is IEC 60601-1:2005, *Medical electrical equipment – Part 1: General requirements for basic safety and essential performance*

AVA Documents Document Sharing Hub

Full document details: IEC 60601-2-29 2008

ME EQUIPMENT under consideration, and may add other BASIC SAFETY and ESSENTIAL PERFORMANCE requirements.

A requirement of a particular standard takes priority over the general standard.

For brevity, IEC 60601-1 is referred to in this particular standard as the general standard. Collateral standards are referred to by their document number.

The numbering of sections, clauses and subclauses of this particular standard corresponds to that of the general standard with the prefix “201” (e.g. 201.1 in this standard addresses the content of Clause 1 of the general standard) or applicable collateral standard with the prefix “20x” where x is the final digit(s) of the collateral standard document number (e.g. 202.4 in this particular standard addresses the content of Clause 4 of the 60601-1-2 collateral standard, 203.4 in this particular standard addresses the content of Clause 4 of the 60601-1-3 collateral standard, etc.). The changes to the text of the general standard are specified by the use of the following words:

"Replacement" means that the clause or subclause of the general standard or applicable collateral standard is replaced completely by the text of this particular standard.

"Addition" means that the text of this particular standard is additional to the requirements of the general standard or applicable collateral standard.

"Amendment" means that the clause or subclause of the general standard or applicable collateral standard is amended as indicated by the text of this particular standard.

Subclauses or figures which are additional to those of the general standard are numbered starting from 201.101. However due to the fact that definitions in the general standard are numbered 3.1 through 3.139, additional definitions in this standard are numbered beginning from 201.3.201. Additional annexes are lettered AA, BB, etc., and additional items aa), bb), etc.

Subclauses or figures which are additional to those of a collateral standard are numbered starting from 20x, where “x” is the number of the collateral standard, e.g. 202 for IEC 60601-1-2, 203 for IEC 60601-1-3, etc.

The term "this standard" is used to make reference to the general standard, any applicable collateral standards and this particular standard taken together.

Where there is no corresponding section, clause or subclause in this particular standard, the section, clause or subclause of the general standard or applicable collateral standard, although possibly not relevant, applies without modification; where it is intended that any part of the general standard or applicable collateral standard, although possibly relevant, is not to be applied, a statement to that effect is given in this particular standard.

201.2 Normative references

Clause 2 of the general standard applies, except as follows:

Addition:

IEC TR 60788:2004, *Medical electrical equipment – Glossary of defined terms*

IEC 61217, *Radiotherapy equipment – Coordinates, movements and scales*

Documents
Document Sharing Hub

Full document details: IEC 60601-2-29 2008

201.3 Terms and definitions

For the purposes of this document, the terms and definitions given in IEC 60601-1:2005 and IEC TR 60788:2004 apply, except as follows:

NOTE An index of defined terms is found beginning on page 23.

Addition:

201.3.201
DELINEATED RADIATION BEAM
that part of the RADIATION BEAM bordered by the shadow cast by the DELINEATORS

201.3.202
DELINEATED RADIATION FIELD
area of the DELINEATED RADIATION BEAM intercepted on a plane perpendicular to the REFERENCE AXIS

201.3.203
DELINEATOR(S)
means for defining the border(s) of the simulated radiation field

201.3.204
RADIOTHERAPY SIMULATOR
SIMULATOR
ME EQUIPMENT that uses X-RAY EQUIPMENT to simulate geometrically the parameters of movements and RADIATION FIELDS of RADIOTHERAPY ME EQUIPMENT to assist with the planning of PATIENT treatments

NOTE This definition does not include:

– CT-simulation devices and MR-simulation devices;

– virtual simulation computer programs;

– imaging modalities that form a part of gamma beam therapy equipment or of electron accelerators.

201.4 General requirements

Clause 4 of the general standard applies, except as follows:

201.4.10.2 SUPPLY MAINS for ME EQUIPMENT and ME SYSTEMS

Addition:

– a sufficiently low internal impedance to prevent voltage fluctuations exceeding ±5 % between the on-load and off-load steady states.

201.5 General requirements for testing of ME EQUIPMENT

Clause 5 of the general standard applies.

201.6 Classification of ME EQUIPMENT and ME SYSTEMS

Clause 6 of the general standard applies.

Documents
Document Sharing Hub

Full document details: IEC 60601-2-29 2008

201.7 ME EQUIPMENT identification, marking and documents

Clause 7 of the general standard applies, except as follows:

201.7.4 Marking of controls and instruments

Additional subclause:

201.7.4.101 Provision of scales and indications for moving parts

a) The following shall be provided:

- a numerical indication of the dimensions of the DELINEATED RADIATION FIELD at a SPECIFIED distance;
- a visual indication of the RADIATION BEAM and the DELINEATED RADIATION FIELD;
- an indication of the position of the ISOCENTRE;
- means for indicating the FOCAL SPOT TO SKIN DISTANCE;
- an indication of the position of the REFERENCE AXIS on entry to the PATIENT or X-RAY IMAGE RECEPTOR;
- an indication to the OPERATOR, associated with the angular position of the DELINEATED RADIATION BEAM, of the possible WEDGE FILTER direction(s) for the RADIOTHERAPY ME EQUIPMENT being simulated;
- a numerical indication of the distance from the FOCAL SPOT to the IMAGE RECEPTOR PLANE;
- a numerical indication of the distance from the ISOCENTRE to the FOCAL SPOT when this parameter is adjustable;
- scale readouts complying with the conventions of IEC 61217, for all available movements of GANTRY, RADIATION HEAD and BLSS (BEAM LIMITING SYSTEMS), DELINEATORS, X-RAY IMAGE RECEPTOR and PATIENT SUPPORT.

b) In order to reduce the possibility of error when transferring data between SIMULATORS and RADIOTHERAPY ME EQUIPMENT having other scale conventions, SIMULATORS may incorporate additional scale readouts supporting other scale conventions, in which case the scale convention then being DISPLAYED by the SIMULATOR shall be unambiguous.

Compliance is checked by inspection.

201.7.8.1 Colours of indicator lights

Addition:

Where indicator lights are used on the TREATMENT CONTROL PANEL (TCP), or other CONTROL PANELS, the colours of the lights shall be in accordance with the following:

– RADIATION BEAM "on"	yellow;
– READY STATE	green;
– urgent action required in response to an unintended state of operation	red;
– PREPARATORY STATE	other colour.

NOTE In the SIMULATOR room, or in other locations, the states "RADIATION BEAM on" and "READY STATE" may need urgent action or caution; different colours, in accordance with Table 2 of the general standard, may therefore be used in such locations.

Light emitting diodes (LEDs) are not considered to be indicator lights when:

- on any CONTROL PANEL, all indications for which no particular colour is required are given by LEDs of the same colour; and

AVA Documents Document Sharing Hub

Full document details: IEC 60601-2-29 2008

– the indications for which particular colours are required are clearly distinguishable by attributes other than the light colour.

201.7.9.1 General

Addition:

See also Table 201.C.101

201.7.9.2.1 General

Addition:

See also Table 201.C.102

The instructions for use shall contain:

– an explanation of the function of all INTERLOCKS and other RADIATION safety devices;
– instructions for checking their correct operation;
– a recommendation of the frequency with which such checks should be made;
– the recommended inspection or replacement intervals for parts having a safety function that are subject to impairment caused, during NORMAL USE of the ME EQUIPMENT, by the effects of IONIZING RADIATION on the dielectric and/or mechanical properties of those parts;

201.7.9.2.15 Environmental protection

Addition:

– include data to assist the RESPONSIBLE ORGANIZATION's RADIOLOGICAL PROTECTION adviser regarding:
  - the range of available DELINEATED RADIATION FIELD dimensions;
  - the maximum available RADIATION FIELD dimensions and the distance from the FOCAL SPOT at which this is SPECIFIED;
  - the available directions of the RADIATION BEAM;
  - the location of the FOCAL SPOT referred to an accessible point on the X-RAY SOURCE ASSEMBLY/RADIATION HEAD;
  - the maximum available X-RAY TUBE VOLTAGE.

201.7.9.3 Technical description

201.7.9.3.1 General

Addition:

See also Table 201.C.103.

The technical description shall provide full details of the environmental conditions and power supply required for NORMAL USE.

Addition:

201.7.9.3.101 Installation

Where the requirements of this standard are wholly or partly met by measures taken during the course of installation, compliance test methods shall be SPECIFIED in the technical description.

Documents
Document Sharing Hub

Full document details: IEC 60601-2-29 2008

Compliance at installation should be checked by inspection of the technical description and test.

201.8 Protection against electrical HAZARDS from ME EQUIPMENT

Clause 8 of the general standard applies, except as follows:

201.8.6.4 Impedance and current-carrying capability

Addition:

aa) The technical description shall contain advice that PROTECTIVE EARTH CONDUCTORS, permanently fixed at installation to connect PROTECTIVE EARTH TERMINALS of ME EQUIPMENT to an external protective system, should be adequately dimensioned according to the requirements of national regulations, for each installation and for the maximum fault current that may occur there.

Compliance is checked by inspection of the technical description

201.8.7.3 Allowable values

Replacement of item d):

The allowable values of the EARTH LEAKAGE CURRENT are 10 mA in NORMAL CONDITION and 20 mA in SINGLE FAULT CONDITION

201.9 Protection against mechanical HAZARDS of ME EQUIPMENT and ME SYSTEMS

Clause 9 of the general standard applies, except as follows:

201.9.2.1 General

Addition:

For the PATIENT SUPPORT system, the requirements shall apply when it is unloaded and when it is loaded with a uniformly distributed mass equal to the maximum specified patient load but not less than 135 kg.

NOTE 1 The phrase "to set-up automatically" or "automatic set-up" is used to denote the moving of ME EQUIPMENT parts automatically to the positions required for the start of a PATIENT treatment simulation.

NOTE 2 The term "pre-programmed movements" is used where movement of ME EQUIPMENT parts takes place according to a previously planned programme, without intervention by the OPERATOR, during PATIENT treatment simulation; this is referred to as "pre-programmed treatment simulation".

201.9.2.2.4.4 Protective measures

Addition:

– where any part of the ME SYSTEM is provided with a device designed to reduce, in NORMAL USE, the RISK of collision with the PATIENT, the operation and limitations of each device shall be described in the instructions for use.

  Compliance is checked by inspection of the instructions for use.

201.9.2.2.5 Continuous activation

Replacement of the existing text of the subclause:

Documents
Document Sharing Hub

Full document details: IEC 60601-2-29 2008

201.9.2.2.5.101 General

It shall not be possible to adjust motorized movements of ME EQUIPMENT parts which may cause physical injury to the PATIENT without continuous simultaneous personal action by the OPERATOR on two switches.

NOTE Linear or angular adjustments of BLSS or DELINEATORS are not considered to be likely causes of injury to the PATIENT unless ACCESSORIES are fitted that do not have integral safety devices/touch guards or are otherwise considered to present a HAZARD.

For ME EQUIPMENT intended to be set-up automatically, it shall not be possible to initiate or maintain movements associated with this condition without continuous simultaneous personal action by the OPERATOR on the automatic set-up switch and a switch common to all movements.

All switches, when released, shall be capable of stopping movement within the limits given in 201.9.2.2.6. In each case, at least one of the required switches shall be HARD-WIRED.

Compliance is checked by inspection.

201.9.2.2.5.102 Operation of movements of ME EQUIPMENT parts from inside the simulator room

The switches required by 201.9.2.2.5.101 shall be located close to the PATIENT SUPPORT system, to allow the OPERATOR to observe the PATIENT during ME EQUIPMENT movement to avoid injury to the PATIENT.

GANTRY angular speed may be increased to a maximum of 12°/s, for positioning under manual control and, for ME EQUIPMENT that includes a computed tomography (CT) capability, during the checking of a pre-programmed CT scan, provided that in both cases there is personal action by the OPERATOR on a “fast speed” enabling switch, followed by continuous personal action by the OPERATOR on the GANTRY rotation switch and the switch common to all movements.

The instructions for use shall contain advice that when a remotely controlled movement from the TCP or a CT scan is intended, a check should be made of all intended or planned movements with the PATIENT finally positioned, before the OPERATOR leaves the SIMULATOR room.

Compliance is checked by inspection of the instructions for use.

201.9.2.2.5.103 Operation of movements of ME EQUIPMENT parts from outside the simulator room

For ME EQUIPMENT that includes a computed tomography (CT) capability, GANTRY angular speed may be increased to a maximum of 12°/s, during pre-programmed CT scans, provided that there is continuous simultaneous personal action by the OPERATOR on the CT enabling switch and on the switch common to all movements.

The INSTRUCTIONS FOR USE shall include the recommendation that the OPERATOR shall have an unobstructed view of the PATIENT before and during the treatment simulation.

Compliance is checked by inspection of the instructions for use.

201.9.2.2.6 Speed of movement(s)

Replacement of the existing text of the subclause:

Documents
Document Sharing Hub

Full document details: IEC 60601-2-29 2008

201.9.2.2.6.101 General

For automatic set-up, speed shall be reduced at least 5° before any planned stop angle and at least 25 mm before any planned stop position. The speed reduction shall be such that overshoot does not exceed 2° for angular displacements and 5 mm for linear displacements. Details of the speed reduction processes shall be included in the technical description.

Compliance is checked by measurement.

201.9.2.2.6.102 Angular movements

No speed shall exceed 7°/s, except for positioning under manual control or during the operation of a pre-programmed CT facility (see subclauses 201.9.2.2.5.102 and 201.9.2.2.5.103).

NOTE This requirement above shall not apply to the BEAM LIMITING SYSTEM (BLS)

When rotating at the speed nearest to, but not exceeding, 1°/s, the angle between the position of the moving part at the instant of operating any control to stop the movement and its final position shall not exceed 0,5°, and it shall not exceed 3° for speeds in excess of 1°/s.

201.9.2.2.6.103 Linear movements

No speed shall exceed 100 mm/s.

When moving at speeds not exceeding 25 mm/s, the distance between the position of the moving part at the instant of operating any control to stop the movement and its final position shall not exceed 3 mm, and it shall not exceed 10 mm for speeds in excess of 25 mm/s.

Compliance is checked by measurement of the stopping distances. In order to eliminate the effects of variable personal reaction times, measurement shall start at the instant the personally actuated switch contacts open or close. In determining a stopping distance, the measurement shall be repeated five times; on each occasion, the part in motion shall stop within the allowable distance.

201.9.2.3 Other HAZARDS associated with moving parts

Addition:

201.9.2.3.101 Interruption or failure

Interruption or failure of

a) the power supply/ies for powered movements or

b) the SUPPLY MAINS to the ME EQUIPMENT

shall cause any parts in motion to be stopped within the limits given in 201.9.2.2.6.

Compliance is checked by interruption of the SUPPLY MAINS a) to powered movements, b) to the ME EQUIPMENT, and measurement of stopping distances. In order to eliminate the effects of variable personal reaction times, measurement shall start at the instant the personally actuated the switch contacts that interrupt the SUPPLY MAINS. In determining a stopping distance, the measurement shall be repeated five times; on each occasion, the part in motion shall stop within the allowable distance.

201.9.2.3.102 Accuracy of positioning

To allow the accurate positioning of the moving parts of the simulator, the minimum speeds of the movements shall comply with the following requirements:

AVA Documents
Document Sharing Hub

Full document details: IEC 60601-2-29 2008

– the minimum speed available for each angular movement shall not exceed 1°/s;

– the minimum speed available for displacements 20, 21, 22 and 23 of the DELINEATED RADIATION FIELD edges, 16, 17 and 18 of the X-RAY IMAGE RECEPTOR, and 9, 10 and 11 of the PATIENT SUPPORT system shall not exceed 10 mm/s (see Figures 101, 102 and 103).

Compliance is checked by inspection.

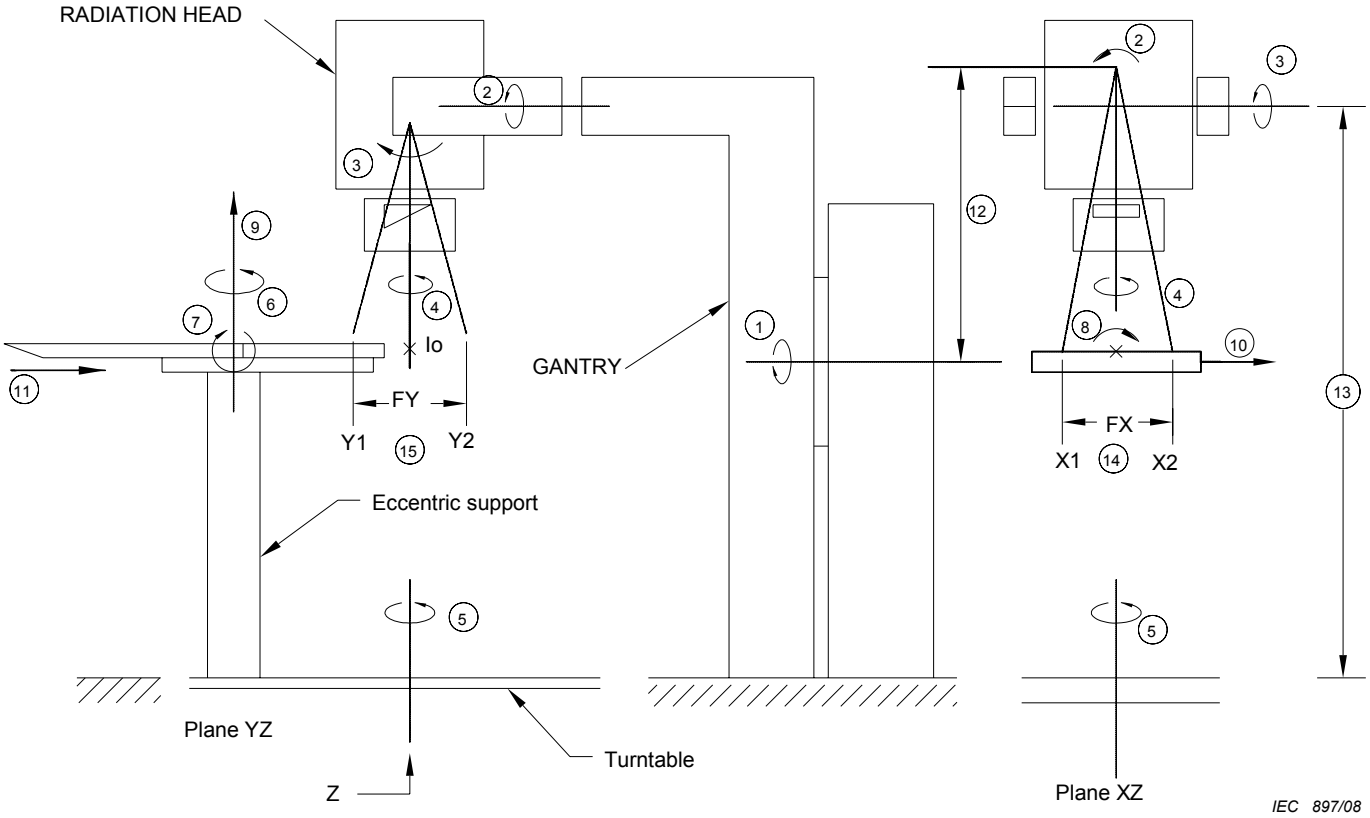

NOTE 1 The axes, directions and dimensions corresponding to the numbers on these figures are listed in the accompanying table.

NOTE 2 The elliptical arrows show clockwise rotations looking towards GANTRY for axes 1 and 8, away from GANTRY for axis 2, from right side of GANTRY for axes 3 and 7, up from ISOCENTRE, Io, for axis 4, up from ISOCENTRE for axis 5, up from table top for axis 6.

NOTE 3 Symbols X1, X2, Y1 and Y2 designate the edges of RADIATION FIELD or DELINEATED RADIATION FIELD according to 6.4.1 of IEC 61217.

NOTE 4 This figure is identical to Figure 13a in IEC 61217.

Figure 101 – Equipment movements and scales – Rotary GANTRY with identification of axes 1 to 8, directions 9 to 13, and dimensions 14 and 15
(see accompanying table)

Documents
Document Sharing Hub
Full document details: IEC 60601-2-29 2008

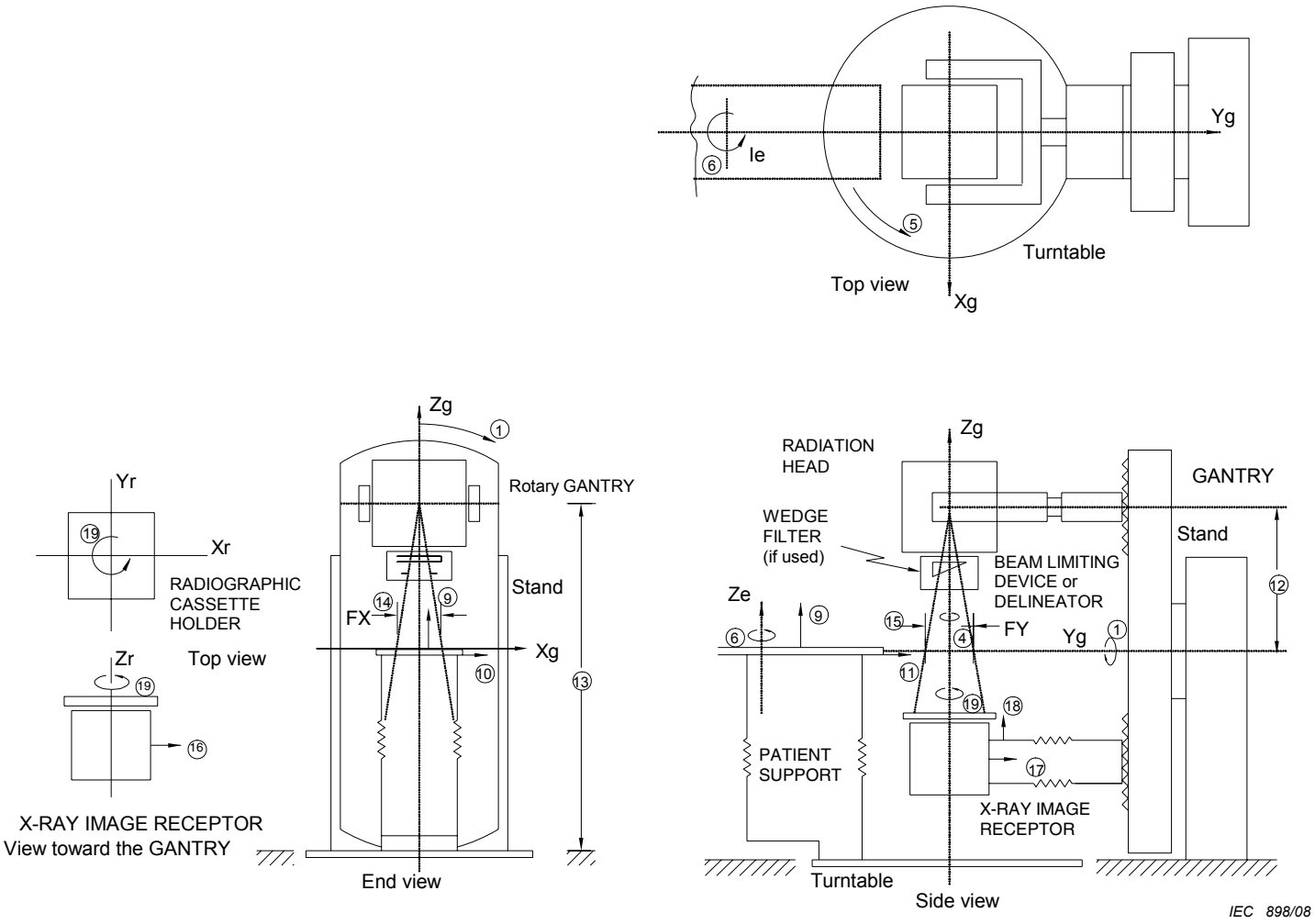

NOTE 1 RADIOGRAPHIC CASSETTE HOLDER and/or X-RAY IMAGE RECEPTOR motions:

Direction 17: motion along Y-axis, parallel to axis 1;

Direction 18: motion along Z-axis, parallel to axis 4;

Axis 19: rotation.

NOTE 2 Symbols Xr, Yr, Zr; Xg, Yg, Zg; and Ze are coordinates for X-RAY IMAGE RECEPTOR; GANTRY; and table top eccentric rotation coordinate systems respectively. Ie is the origin of the eccentric coordinate system.

NOTE 3 This figure is identical to Figure 13b in IEC 61217.

Figure 102 – Equipment movements and scales – ISOCENTRIC RADIOTHERAPY SIMULATOR or TELERADIOTHERAPY ME EQUIPMENT, with identification of axes 1; 4 to 6; 19, of directions 9 to 12; 16 to 18 and of dimensions 14; 15
(see accompanying table)

Documents
Document Sharing Hub
Full document details: IEC 60601-2-29 2008