IEC 60601-2-3

Edition 3.0 2012-04

INTERNATIONAL STANDARD

NORME INTERNATIONALE

Medical electrical equipment – Part 2-3: Particular requirements for the basic safety and essential performance of short-wave therapy equipment

Appareils électromédicaux – Partie 2-3: Exigences particulières pour la sécurité de base et les performances essentielles des appareils de thérapie à ondes courtes

IEC 60601-2-3:2012

Documents
Document Sharing Hub

Full document details: IEC 60601-2-3 2012

THIS PUBLICATION IS COPYRIGHT PROTECTED

Copyright © 2012 IEC, Geneva, Switzerland

All rights reserved. Unless otherwise specified, no part of this publication may be reproduced or utilized in any form or by any means, electronic or mechanical, including photocopying and microfilm, without permission in writing from either IEC or IEC's member National Committee in the country of the requester.
If you have any questions about IEC copyright or have an enquiry about obtaining additional rights to this publication, please contact the address below or your local IEC member National Committee for further information.

Droits de reproduction réservés. Sauf indication contraire, aucune partie de cette publication ne peut être reproduite ni utilisée sous quelque forme que ce soit et par aucun procédé, électronique ou mécanique, y compris la photocopie et les microfilms, sans l'accord écrit de la CEI ou du Comité national de la CEI du pays du demandeur.
Si vous avez des questions sur le copyright de la CEI ou si vous désirez obtenir des droits supplémentaires sur cette publication, utilisez les coordonnées ci-après ou contactez le Comité national de la CEI de votre pays de résidence.

IEC Central Office
3, rue de Varembé
CH-1211 Geneva 20
Switzerland

Tel.: +41 22 919 02 11
Fax: +41 22 919 03 00
info@iec.ch
www.iec.ch

About the IEC

The International Electrotechnical Commission (IEC) is the leading global organization that prepares and publishes International Standards for all electrical, electronic and related technologies.

About IEC publications

The technical content of IEC publications is kept under constant review by the IEC. Please make sure that you have the latest edition, a corrigenda or an amendment might have been published.

Useful links:

IEC publications search - www.iec.ch/searchpub

The advanced search enables you to find IEC publications by a variety of criteria (reference number, text, technical committee,…).
It also gives information on projects, replaced and withdrawn publications.

IEC Just Published - webstore.iec.ch/justpublished

Stay up to date on all new IEC publications. Just Published details all new publications released. Available on-line and also once a month by email.

Electropedia - www.electropedia.org

The world's leading online dictionary of electronic and electrical terms containing more than 30 000 terms and definitions in English and French, with equivalent terms in additional languages. Also known as the International Electrotechnical Vocabulary (IEV) on-line.

Customer Service Centre - webstore.iec.ch/csc

If you wish to give us your feedback on this publication or need further assistance, please contact the Customer Service Centre: csc@iec.ch.

A propos de la CEI

La Commission Electrotechnique Internationale (CEI) est la première organisation mondiale qui élabore et publie des Normes internationales pour tout ce qui a trait à l'électricité, à l'électronique et aux technologies apparentées.

A propos des publications CEI

Le contenu technique des publications de la CEI est constamment revu. Veuillez vous assurer que vous possédez l'édition la plus récente, un corrigendum ou amendement peut avoir été publié.

Liens utiles:

Recherche de publications CEI - www.iec.ch/searchpub

La recherche avancée vous permet de trouver des publications CEI en utilisant différents critères (numéro de référence, texte, comité d'études,…).
Elle donne aussi des informations sur les projets et les publications remplacées ou retirées.

Just Published CEI - webstore.iec.ch/justpublished

Restez informé sur les nouvelles publications de la CEI. Just Published détaille les nouvelles publications parues. Disponible en ligne et aussi une fois par mois par email.

Electropedia - www.electropedia.org

Le premier dictionnaire en ligne au monde de termes électroniques et électriques. Il contient plus de 30 000 termes et définitions en anglais et en français, ainsi que les termes équivalents dans les langues additionnelles. Egalement appelé Vocabulaire Electrotechnique International (VEI) en ligne.

Service Clients - webstore.iec.ch/csc

Si vous désirez nous donner des commentaires sur cette publication ou si vous avez des questions contactez-nous: csc@iec.ch.

Documents
Document Sharing Hub

Full document details: IEC 60601-2-3 2012

IEC 60601-2-3

Edition 3.0 2012-04

INTERNATIONAL STANDARD

NORME INTERNATIONALE

Medical electrical equipment –
Part 2-3: Particular requirements for the basic safety and essential performance of short-wave therapy equipment

Appareils électromédicaux –
Partie 2-3: Exigences particulières pour la sécurité de base et les performances essentielles des appareils de thérapie à ondes courtes

INTERNATIONAL
ELECTROTECHNICAL
COMMISSION

COMMISSION
ELECTROTECHNIQUE
INTERNATIONALE

PRICE CODE
CODE PRIX **S**

ICS 11.040.60

ISBN 978-2-8322-0071-1

Warning! Make sure that you obtained this publication from an authorized distributor.
Attention! Veuillez vous assurer que vous avez obtenu cette publication via un distributeur agréé.

AVA Documents
Document Sharing Hub

® Registered trademark of the International Electrotechnical Commission
Marque déposée de la Commission Electrotechnique Internationale

Full document details: IEC 60601-2-3 2012

CONTENTS

FOREWORD 3
INTRODUCTION 5
201.1 Scope, object and related standards 6
201.2 Normative references 7
201.3 Terms and definitions 7
201.4 General requirements 8
201.5 General requirements for testing of ME EQUIPMENT 8
201.6 Classification of ME EQUIPMENT and ME SYSTEMS 8
201.7 ME EQUIPMENT identification, marking and documents 8
201.8 Protection against electrical HAZARDS from ME EQUIPMENT 10
201.9 Protection against MECHANICAL HAZARDS of ME EQUIPMENT and ME SYSTEMS 14
201.10 Protection against unwanted and excessive radiation HAZARDS 14
201.11 Protection against excessive temperatures and other HAZARDS 14
201.12 Accuracy of controls and instruments and protection against hazardous outputs 14
201.13 HAZARDOUS SITUATIONS and fault conditions 15
201.14 PROGRAMMABLE ELECTRICAL MEDICAL SYSTEMS (PEMS) 16
201.15 Construction of ME EQUIPMENT 16
201.16 ME SYSTEMS 16
201.17 Electromagnetic compatibility of ME EQUIPMENT and ME SYSTEMS 16
Annexes 16
ANNEX C (informative) Guide to marking and labelling requirements for ME EQUIPMENT and ME SYSTEMS 17
Annex AA (informative) Particular guidance and rationale 18
Index of defined terms used in this particular standard 20

Figure 201.101 – Dielectric strength test for capacitive APPLICATORS 12
Figure 201.102 – Test probe 13
Figure 201.103 – Dielectric strength test for inductive APPLICATORS 14

Documents
Document Sharing Hub

Full document details: IEC 60601-2-3 2012

INTERNATIONAL ELECTROTECHNICAL COMMISSION

MEDICAL ELECTRICAL EQUIPMENT –

Part 2-3: Particular requirements for the basic safety and essential performance of short-wave therapy equipment

FOREWORD

1) The International Electrotechnical Commission (IEC) is a worldwide organization for standardization comprising all national electrotechnical committees (IEC National Committees). The object of IEC is to promote international co-operation on all questions concerning standardization in the electrical and electronic fields. To this end and in addition to other activities, IEC publishes International Standards, Technical Specifications, Technical Reports, Publicly Available Specifications (PAS) and Guides (hereafter referred to as "IEC Publication(s)"). Their preparation is entrusted to technical committees; any IEC National Committee interested in the subject dealt with may participate in this preparatory work. International, governmental and non-governmental organizations liaising with the IEC also participate in this preparation. IEC collaborates closely with the International Organization for Standardization (ISO) in accordance with conditions determined by agreement between the two organizations.
2) The formal decisions or agreements of IEC on technical matters express, as nearly as possible, an international consensus of opinion on the relevant subjects since each technical committee has representation from all interested IEC National Committees.
3) IEC Publications have the form of recommendations for international use and are accepted by IEC National Committees in that sense. While all reasonable efforts are made to ensure that the technical content of IEC Publications is accurate, IEC cannot be held responsible for the way in which they are used or for any misinterpretation by any end user.
4) In order to promote international uniformity, IEC National Committees undertake to apply IEC Publications transparently to the maximum extent possible in their national and regional publications. Any divergence between any IEC Publication and the corresponding national or regional publication shall be clearly indicated in the latter.
5) IEC itself does not provide any attestation of conformity. Independent certification bodies provide conformity assessment services and, in some areas, access to IEC marks of conformity. IEC is not responsible for any services carried out by independent certification bodies.
6) All users should ensure that they have the latest edition of this publication.
7) No liability shall attach to IEC or its directors, employees, servants or agents including individual experts and members of its technical committees and IEC National Committees for any personal injury, property damage or other damage of any nature whatsoever, whether direct or indirect, or for costs (including legal fees) and expenses arising out of the publication, use of, or reliance upon, this IEC Publication or any other IEC Publications.
8) Attention is drawn to the Normative references cited in this publication. Use of the referenced publications is indispensable for the correct application of this publication.
9) Attention is drawn to the possibility that some of the elements of this IEC Publication may be the subject of patent rights. IEC shall not be held responsible for identifying any or all such patent rights.

International standard IEC 60601-2-3 has been prepared by subcommittee 62D: Electromedical equipment, of IEC technical committee 62: Electrical equipment in medical practice.

This third edition cancels and replaces the second edition of IEC 60601-2-3 published in 1991 and its amendment 1 published in 1998. This edition constitutes a technical revision and has been aligned with IEC 60601-1:2005.

The text of this particular standard is based on the following documents:

FDIS	Report on voting
62D/977/FDIS	62D/993/RVD

Full information on the voting for the approval of this particular standard can be found in the report on voting indicated in the above table.

AVA Documents
Document Sharing Hub

Full document details: IEC 60601-2-3 2012

This publication has been drafted in accordance with the ISO/IEC Directives, Part 2.

In this standard, the following print types are used:

– Requirements and definitions: roman type.
– *Test specifications: italic type.*
– Informative material appearing outside of tables, such as notes, examples and references: in smaller type. Normative text of tables is also in a smaller type.
– TERMS DEFINED IN CLAUSE 3 OF THE GENERAL STANDARD, IN THIS PARTICULAR STANDARD OR AS NOTED: SMALL CAPITALS.

In referring to the structure of this standard, the term

– "clause" means one of the seventeen numbered divisions within the table of contents, inclusive of all subdivisions (e.g. Clause 7 includes subclauses 7.1, 7.2, etc.);
– "subclause" means a numbered subdivision of a clause (e.g. 7.1, 7.2 and 7.2.1 are all subclauses of Clause 7).

References to clauses within this standard are preceded by the term "Clause" followed by the clause number. References to subclauses within this particular standard are by number only.

In this standard, the conjunctive "or" is used as an "inclusive or" so a statement is true if any combination of the conditions is true.

The verbal forms used in this standard conform to usage described in Annex H of the ISO/IEC Directives, Part 2. For the purposes of this standard, the auxiliary verb:

– "shall" means that compliance with a requirement or a test is mandatory for compliance with this standard;
– "should" means that compliance with a requirement or a test is recommended but is not mandatory for compliance with this standard;
– "may" is used to describe a permissible way to achieve compliance with a requirement or test.

An asterisk (*) as the first character of a title or at the beginning of a paragraph or table title indicates that there is guidance or rationale related to that item in Annex AA.

A list of all parts of the IEC 60601 series, published under the general title *Medical electrical equipment,* can be found on the IEC website.

The committee has decided that the contents of this publication will remain unchanged until the stability date indicated on the IEC web site under "http://webstore.iec.ch" in the data related to the specific publication. At this date, the publication will be

- reconfirmed,
- withdrawn,
- replaced by a revised edition, or
- amended.

Documents
Document Sharing Hub

Full document details: IEC 60601-2-3 2012

INTRODUCTION

The minimum safety requirements specified in this particular standard are considered to provide for a practical degree of safety in the operation of short-wave therapy equipment.

This particular standard amends and supplements IEC 60601-1 (third edition, 2005): *Medical electrical equipment – Part 1: General requirements for safety and essential performance*, hereinafter referred to as the general standard (see 201.1.4).

The requirements are followed by specifications for the relevant tests.

A "particular guidance and rationale" section giving some explanatory notes, where appropriate, about the more important requirements is included in Annex AA.

Clauses or subclauses for which there are explanatory notes in annex AA are marked with an asterisk (*).

It is considered that a knowledge of the reasons for these requirements will not only facilitate the proper application of the standard but will, in due course, expedite any revision necessitated by changes in clinical practice or as a result of developments in technology. However, this annex does not form part of the requirements of this standard.

Documents
Document Sharing Hub

Full document details: IEC 60601-2-3 2012

MEDICAL ELECTRICAL EQUIPMENT –

Part 2-3: Particular requirements for the basic safety and essential performance of short-wave therapy equipment

201.1 Scope, object and related standards

Clause 1 of the general standard[1] applies, except as follows:

201.1.1 Scope

Replacement:

This particular standard specifies the requirements for the safety of SHORT-WAVE THERAPY EQUIPMENT, hereafter referred to as ME EQUIPMENT, as defined in subclause 201.3.206.

LOW POWER EQUIPMENT as defined in subclause 201.3.202 is exempted from certain requirements of this standard.

201.1.2 Object

Replacement:

The object of this particular standard is to establish particular BASIC SAFETY and ESSENTIAL PERFORMANCE requirements for SHORT-WAVE THERAPY EQUIPMENT as defined in 201.3.206.

201.1.3 Collateral standards

Addition:

This particular standard refers to those applicable collateral standards that are listed in Clause 2 of the general standard.

IEC 60601-1-3 does not apply. All other published collateral standards in the IEC 60601-1 series apply as published.

201.1.4 Particular standards

Replacement:

In the IEC 60601 series, particular standards may modify, replace or delete requirements contained in the general standard and collateral standards as appropriate for the particular ME EQUIPMENT under consideration, and may add other BASIC SAFETY and ESSENTIAL PERFORMANCE requirements.

A requirement of a particular standard takes priority over the general standard.

For brevity, IEC 60601-1 is referred to in this particular standard as the general standard. Collateral standards are referred to by their document number.

---

[1] The general standard is IEC 60601-1:2005, *Medical electrical equipment – Part 1: General requirements for basic safety and essential performance*

AVA Documents
Document Sharing Hub

Full document details: IEC 60601-2-3 2012

The numbering of clauses and subclauses of this particular standard corresponds to that of the general standard with the prefix “201” (e.g. 201.1 in this standard addresses the content of Clause 1 of the general standard) or applicable collateral standard with the prefix “20x” where x is the final digit(s) of the collateral standard document number (e.g. 202.4 in this particular standard addresses the content of Clause 4 of the IEC 60601-1-2 collateral standard, 203.4 in this particular standard addresses the content of Clause 4 of the IEC 60601-1-3 collateral standard, etc.). The changes to the text of the general standard are specified by the use of the following words:

“Replacement” means that the clause or subclause of the general standard or applicable collateral standard is replaced completely by the text of this particular standard.

“Addition” means that the text of this particular standard is additional to the requirements of the general standard or applicable collateral standard.

“Amendment” means that the clause or subclause of the general standard or applicable collateral standard is amended as indicated by the text of this particular standard.

Subclauses, figures or tables which are additional to those of the general standard are numbered starting from 201.101. However due to the fact that definitions in the general standard are numbered 3.1 through 3.139, additional definitions in this standard are numbered beginning from 201.3.201. Additional annexes are lettered AA, BB, etc., and additional items aa), bb), etc.

Subclauses, figures or tables which are additional to those of a collateral standard are numbered starting from 20x, where “x” is the number of the collateral standard, e.g. 202 for IEC 60601-1-2, 203 for IEC 60601-1-3, etc.

The term “this standard” is used to make reference to the general standard, any applicable collateral standards and this particular standard taken together.

Where there is no corresponding clause or subclause in this particular standard, the clause or subclause of the general standard or applicable collateral standard, although possibly not relevant, applies without modification; where it is intended that any part of the general standard or applicable collateral standard, although possibly relevant, is not to be applied, a statement to that effect is given in this particular standard.

201.2 Normative references

Clause 2 of the general standard applies.

201.3 Terms and definitions

For the purposes of this document, the terms and definitions given in IEC 60601-1:2005, apply, except as follows:

Addition:

201.3.201
APPLICATOR
part of the ME EQUIPMENT used to couple the radio-frequency power to the PATIENT

201.3.202
LOW POWER EQUIPMENT
SHORT-WAVE THERAPY EQUIPMENT having a RATED OUTPUT POWER not exceeding 10 W

AVA Documents
Document Sharing Hub

Full document details: IEC 60601-2-3 2012

201.3.203
MATCHED LOAD
complex load which, when connected, results in the maximum power being delivered from the SHORT-WAVE THERAPY EQUIPMENT into the load

201.3.204
OUTPUT CIRCUIT
all conductive parts used to couple radio-frequency power from the generator to the APPLICATORS, including conductive parts of the APPLICATORS and their connecting cables

201.3.205
*** RATED OUTPUT POWER**
value of the maximum radio-frequency power which can be fed into a MATCHED LOAD

201.3.206
*** SHORT-WAVE THERAPY EQUIPMENT**
ME EQUIPMENT for the therapeutic treatment of the PATIENT by exposure to electric or magnetic fields produced in the frequency range of more than 13 MHz but not exceeding 45 MHz

201.4 General requirements

Clause 4 of the general standard applies.

201.5 General requirements for testing of ME EQUIPMENT

Clause 5 of the general standard applies, except as follows:

Additional subclause:

201.5.101 Routine tests

The testing during manufacture should include:

a) Measurement of the operating frequency with the ME EQUIPMENT operating under the conditions specified in item b) below.

b) Output power test as specified in subclause 201.12.1.101 but only under the conditions [APPLICATOR(S), spacing(s), load resistance] which produces the maximum output power.

c) Measurement of the PATIENT LEAKAGE CURRENT under the conditions stated in subclause 201.8.7.1 of this particular standard.

201.6 Classification of ME EQUIPMENT and ME SYSTEMS

Clause 6 of the general standard applies.

201.7 ME EQUIPMENT identification, marking and documents

Clause 7 of the general standard applies, except as follows:

201.7.2 Marking on the outside of ME EQUIPMENT or ME EQUIPMENT parts

Additional subclause:

201.7.2.101 Output

SHORT-WAVE THERAPY EQUIPMENT shall be marked with the following information:

Documents
Document Sharing Hub

Full document details: IEC 60601-2-3 2012

- RATED OUTPUT POWER in watts and the load impedance at which this power is available;
- operating frequency in megahertz;
- symbol number 5140 (non-ionizing electromagnetic radiation) of IEC 60878.

Compliance is checked by inspection.

201.7.3 Marking on the inside of ME EQUIPMENT or ME EQUIPMENT parts

Additional subclause:

201.7.3.101 * Marking for access

Symbols number 10 (caution) and number 11 (operating instructions) of Table D.1 in Appendix D of the general standard shall be displayed on or near components or on panels giving access to components if adjustment or replacement might cause the ME EQUIPMENT to fail to comply with IEC 60601-1-2.

Compliance is checked by inspection.

201.7.4.2 * Control devices

Addition:

The output control shall have a scale and/or an associated indicator representing the radio-frequency output. The numeral “0” shall not be used unless any power delivered in this position is less than 2 % of the RATED OUTPUT POWER. If the output scale or indicator represents watts of output power, it shall be so marked.

Compliance is checked by inspection and, if appropriate, by measurement of the output power (see 201.12.1.101).

201.7.9.2 Instructions for use

Additional subclause:

201.7.9.2.101 Additional instructions for use

The instructions for use shall contain additionally:

a) Information concerning the compatibility of APPLICATOR connecting cables in order to prevent the use of unsuitable cable.

b) *Notes on the application of ME EQUIPMENT drawing the OPERATOR’S attention to certain precautions which are necessary during treatment.

   In particular, advice shall be given on:

   1) For all SHORT-WAVE THERAPY EQUIPMENT:

      – The function of certain implanted electrical devices, for example pacemakers, may be adversely affected during treatment with short-wave therapy. In case of doubt, the advice of the physician in charge of the PATIENT should be sought.

      – The function of other PATIENT connected ME EQUIPMENT may be adversely affected by the operation of SHORT-WAVE THERAPY EQUIPMENT.

   2) For all SHORT-WAVE THERAPY EQUIPMENT except LOW POWER EQUIPMENT:

      – Short-wave therapy should not be applied to PATIENTS through clothing. Conductive material should be excluded from the treatment area. Additionally, it should not be applied to PATIENTS wearing metallic objects like jewellery or clothing containing metallic material (for example metallic buttons, clips or thread).

AVA Documents
Document Sharing Hub

– Parts of the PATIENT'S body containing metallic implants (for example a medullary nail) should normally be excluded from the treatment, unless special techniques are used.

– Hearing aids should be removed.

– The PATIENT should not be allowed to come into contact with conductive parts which are earthed or which have an appreciable capacitance to earth and which may provide unwanted pathways for the radio-frequency current. In particular, beds or chairs having metal frames should not be used.

– The connecting cables associated with the APPLICATOR(S) should be positioned in such a way that contact with the PATIENT and with conductive or energy absorbing objects is avoided.

c) Advice for the OPERATOR to inspect regularly the insulation of the APPLICATORS and their cables for possible damage.

Compliance is checked by inspection of the instructions for use.

201.7.9.3 Technical description

201.7.9.3.1 * General

Addition:

– The technical description shall contain information on measuring the RATED OUTPUT POWER including a description of the MATCHED LOAD.

– For SHORT-WAVE THERAPY EQUIPMENT with interchangeable APPLICATORS, the technical description shall state the maximum safe output power that may be applied to each APPLICATOR.

Compliance is checked by inspection of the technical description.

201.8 Protection against electrical HAZARDS from ME EQUIPMENT

Clause 8 of the general standard applies except as follows:

201.8.3 Classification of APPLIED PARTS

Addition:

aa) APPLICATORS of SHORT-WAVE THERAPY EQUIPMENT shall be TYPE BF or CF.

201.8.7.1 * General requirements

Item b) *Addition:*

– with the short-wave output not energized but in such a way that LEAKAGE CURRENTS and PATIENT AUXILIARY CURRENTS are not affected.

201.8.8.3 * Dielectric strength

Addition:

APPLICATORS and their connecting cables shall withstand the maximum output voltage of the SHORTWAVE THERAPY EQUIPMENT without breakdown before being subjected to the test in 8.8.3 of the general standard.

aa) Compliance for capacitive APPLICATORS and their connecting cables is checked as follows:.

Each pair of APPLICATORS is tested using the cables specified by the MANUFACTURER. The APPLICATOR under test is suspended or supported so that it is spaced at least 50 cm from

Documents
Document Sharing Hub

all other objects with the exception of the APPLICATOR *arm of the* ME EQUIPMENT *or similar supporting device. The second* APPLICATOR *of the pair is positioned in the center of and spaced approximately 10 mm above an earthed metal plate having an area no less than 900 cm^2. The arrangement is shown in Figure 201.101.*

NOTE It is essential that the metal plate used in this test has a low Impedance to earth at the operating frequency.

The SHORT-WAVE THERAPY EQUIPMENT *is operated at* RATED MAINS VOLTAGE *and at the* RATED OUTPUT POWER *specified by the* MANUFACTURER *for the particular pair of* APPLICATORS *under test. The output circuit is tuned to resonance, re-positioning the second* APPLICATOR *as necessary.*

The test is performed using an earthed metal probe of 8 mm diameter with a smooth and clean hemispherical end, mounted into an insulating rod to form a test handle, as illustrated in Figure 201.102. The hemispherical end of the probe shall be applied to the APPLICATOR *under test and moved slowly but continuously over the surface of the* APPLICATOR *and the full length of its connecting cable and shall not be allowed to rest at any point. During the test evidence of flash-over or breakdown constitutes failure.*

The test is then repeated with the APPLICATORS *changing places.*

bb) Compliance for an inductive APPLICATOR *and its connecting cable is checked as follows:*

The APPLICATOR *under test is positioned in the center of and spaced approximately 10 mm above an earthed metal plate having an area no less than 900 cm^2. The arrangement is shown in Figure 201.103.*

NOTE It is essential that the metal plate used in this test has a low impedance to earth at the operating frequency.

The SHORT-WAVE THERAPY EQUIPMENT *is operated at* RATED MAINS VOLTAGE *and at the* RATED OUTPUT POWER *specified by the* MANUFACTURER *for the particular* APPLICATOR *under test. The output circuit is tuned to resonance, re-positioning the* APPLICATOR *as necessary.*

The test is performed using an earthed metal probe of 8 mm diameter with a smooth and clean hemispherical end, mounted into an insulating rod to form a test handle, as illustrated in Figure 201.102. The hemispherical end of the probe shall be applied to the APPLICATOR *and moved slowly but continuously over the surface of the* APPLICATOR *and the full length of its connecting cable and shall not be allowed to rest at any point. During the test evidence of flash-over or breakdown constitutes failure.*

AVA Documents
Document Sharing Hub

Full document details: IEC 60601-2-3 2012

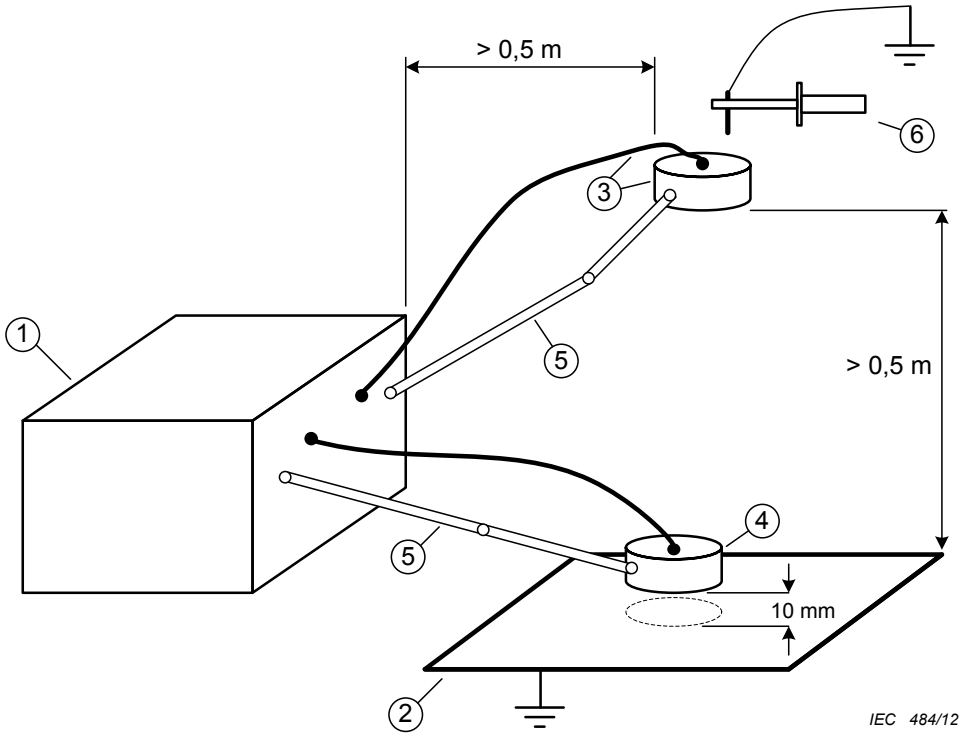

Key

1 ME EQUIPMENT

2 Metal plate connected to earth

3 APPLICATOR being tested

4 Second APPLICATOR

5 APPLICATOR support

6 Test probe connected to earth

Figure 201.101 – Dielectric strength test for capacitive APPLICATORS

Documents
Document Sharing Hub
Full document details: IEC 60601-2-3 2012