IEC 60601-2-76

Edition 1.0 2018-04

INTERNATIONAL STANDARD

NORME INTERNATIONALE

Medical electrical equipment – Part 2-76: Particular requirements for the basic safety and essential performance of low energy ionized gas haemostasis equipment

Appareils électromédicaux – Partie 2-76: Exigences particulières pour la sécurité de base et les performances essentielles des appareils d'hémostase à gaz ionisé à faible pouvoir calorifique

IEC 60601-2-76:2018-04(en-fr)

Documents
Document Sharing Hub
Full document details: IEC 60601-2-76 2018

THIS PUBLICATION IS COPYRIGHT PROTECTED

Copyright © 2018 IEC, Geneva, Switzerland

All rights reserved. Unless otherwise specified, no part of this publication may be reproduced or utilized in any form or by any means, electronic or mechanical, including photocopying and microfilm, without permission in writing from either IEC or IEC's member National Committee in the country of the requester. If you have any questions about IEC copyright or have an enquiry about obtaining additional rights to this publication, please contact the address below or your local IEC member National Committee for further information.

Droits de reproduction réservés. Sauf indication contraire, aucune partie de cette publication ne peut être reproduite ni utilisée sous quelque forme que ce soit et par aucun procédé, électronique ou mécanique, y compris la photocopie et les microfilms, sans l'accord écrit de l'IEC ou du Comité national de l'IEC du pays du demandeur. Si vous avez des questions sur le copyright de l'IEC ou si vous désirez obtenir des droits supplémentaires sur cette publication, utilisez les coordonnées ci-après ou contactez le Comité national de l'IEC de votre pays de résidence.

IEC Central Office
3, rue de Varembé
CH-1211 Geneva 20
Switzerland

Tel.: +41 22 919 02 11
info@iec.ch
www.iec.ch

About the IEC
The International Electrotechnical Commission (IEC) is the leading global organization that prepares and publishes International Standards for all electrical, electronic and related technologies.

About IEC publications
The technical content of IEC publications is kept under constant review by the IEC. Please make sure that you have the latest edition, a corrigenda or an amendment might have been published.

IEC Catalogue - webstore.iec.ch/catalogue
The stand-alone application for consulting the entire bibliographical information on IEC International Standards, Technical Specifications, Technical Reports and other documents. Available for PC, Mac OS, Android Tablets and iPad.

IEC publications search - webstore.iec.ch/advsearchform
The advanced search enables to find IEC publications by a variety of criteria (reference number, text, technical committee,…). It also gives information on projects, replaced and withdrawn publications.

IEC Just Published - webstore.iec.ch/justpublished
Stay up to date on all new IEC publications. Just Published details all new publications released. Available online and also once a month by email.

Electropedia - www.electropedia.org
The world's leading online dictionary of electronic and electrical terms containing 21 000 terms and definitions in English and French, with equivalent terms in 16 additional languages. Also known as the International Electrotechnical Vocabulary (IEV) online.

IEC Glossary - std.iec.ch/glossary
67 000 electrotechnical terminology entries in English and French extracted from the Terms and Definitions clause of IEC publications issued since 2002. Some entries have been collected from earlier publications of IEC TC 37, 77, 86 and CISPR.

IEC Customer Service Centre - webstore.iec.ch/csc
If you wish to give us your feedback on this publication or need further assistance, please contact the Customer Service Centre: sales@iec.ch.

A propos de l'IEC
La Commission Electrotechnique Internationale (IEC) est la première organisation mondiale qui élabore et publie des Normes internationales pour tout ce qui a trait à l'électricité, à l'électronique et aux technologies apparentées.

A propos des publications IEC
Le contenu technique des publications IEC est constamment revu. Veuillez vous assurer que vous possédez l'édition la plus récente, un corrigendum ou amendement peut avoir été publié.

Catalogue IEC - webstore.iec.ch/catalogue
Application autonome pour consulter tous les renseignements bibliographiques sur les Normes internationales, Spécifications techniques, Rapports techniques et autres documents de l'IEC. Disponible pour PC, Mac OS, tablettes Android et iPad.

Recherche de publications IEC - webstore.iec.ch/advsearchform

La recherche avancée permet de trouver des publications IEC en utilisant différents critères (numéro de référence, texte, comité d'études,…). Elle donne aussi des informations sur les projets et les publications remplacées ou retirées.

IEC Just Published - webstore.iec.ch/justpublished

Restez informé sur les nouvelles publications IEC. Just Published détaille les nouvelles publications parues. Disponible en ligne et aussi une fois par mois par email.

Electropedia - www.electropedia.org

Le premier dictionnaire en ligne de termes électroniques et électriques. Il contient 21 000 termes et définitions en anglais et en français, ainsi que les termes équivalents dans 16 langues additionnelles. Egalement appelé Vocabulaire Electrotechnique International (IEV) en ligne.

Glossaire IEC - std.iec.ch/glossary
67 000 entrées terminologiques électrotechniques, en anglais et en français, extraites des articles Termes et Définitions des publications IEC parues depuis 2002. Plus certaines entrées antérieures extraites des publications des CE 37, 77, 86 et CISPR de l'IEC.

Service Clients - webstore.iec.ch/csc

Si vous désirez nous donner des commentaires sur cette publication ou si vous avez des questions contactez-nous: sales@iec.ch.

Documents
Document Sharing Hub

Full document details: IEC 60601-2-76 2018

IEC 60601-2-76

Edition 1.0 2018-04

INTERNATIONAL STANDARD

NORME INTERNATIONALE

Medical electrical equipment – Part 2-76: Particular requirements for the basic safety and essential performance of low energy ionized gas haemostasis equipment

Appareils électromédicaux – Partie 2-76: Exigences particulières pour la sécurité de base et les performances essentielles des appareils d'hémostase à gaz ionisé à faible pouvoir calorifique

INTERNATIONAL
ELECTROTECHNICAL
COMMISSION

COMMISSION
ELECTROTECHNIQUE
INTERNATIONALE

ICS 11.040

ISBN 978-2-8322-5497-4

Warning! Make sure that you obtained this publication from an authorized distributor.
Attention! Veuillez vous assurer que vous avez obtenu cette publication via un distributeur agréé.

® Registered trademark of the International Electrotechnical Commission
Marque déposée de la Commission Electrotechnique Internationale

Documents
Document Sharing Hub

Full document details: IEC 60601-2-76 2018

CONTENTS

FOREWORD 3
INTRODUCTION 5
201.1 Scope, object and related standards 6
201.2 Normative references 7
201.3 Terms and definitions 8
201.4 * General requirements 9
201.5 General requirements for testing ME EQUIPMENT 9
201.6 Classification of ME EQUIPMENT and ME SYSTEMS 9
201.7 ME EQUIPMENT identification, marking and documents 9
201.8 Protection against electrical HAZARDS from ME EQUIPMENT 10
201.9 Protection against mechanical HAZARDS of ME EQUIPMENT and ME SYSTEMS 18
201.10 Protection against unwanted and excessive radiation HAZARDS 18
201.11 Protection against excessive temperatures and other HAZARDS 18
201.12 Accuracy of controls and instruments and protection against hazardous outputs 19
201.13 HAZARDOUS SITUATIONS and fault conditions for ME EQUIPMENT 20
201.14 Programmable electrical medical systems (PEMS) 20
201.15 Construction of ME EQUIPMENT 20
201.16 ME SYSTEMS 21
201.17 Electromagnetic compatibility of ME EQUIPMENT and ME SYSTEMS 21
Annex AA (informative) Particular guidance and rationale 22
Bibliography 25
Index of defined terms used in this particular standard 26

Figure 201.101 – Measurement of LEAKAGE CURRENT from the PLASMA FLARE 11
Figure 201.102 – Measurement of low frequency PATIENT LEAKAGE CURRENT 12
Figure 201.103 – Measurement of IONIZED GAS ACCESSORY CABLE LEAKAGE CURRENT 13
Figure 201.104 – Test apparatus for anchorages of IONIZED GAS ACCESSORY CABLES 18
Figure 201.105 – Measurement of temperature from the PLASMA FLARE 19

Documents
Document Sharing Hub

Full document details: IEC 60601-2-76 2018

INTERNATIONAL ELECTROTECHNICAL COMMISSION

MEDICAL ELECTRICAL EQUIPMENT –

Part 2-76: Particular requirements for the basic safety and essential performance of low energy ionized gas haemostasis equipment

FOREWORD

1) The International Electrotechnical Commission (IEC) is a worldwide organization for standardization comprising all national electrotechnical committees (IEC National Committees). The object of IEC is to promote international co-operation on all questions concerning standardization in the electrical and electronic fields. To this end and in addition to other activities, IEC publishes International Standards, Technical Specifications, Technical Reports, Publicly Available Specifications (PAS) and Guides (hereafter referred to as "IEC Publication(s)"). Their preparation is entrusted to technical committees; any IEC National Committee interested in the subject dealt with may participate in this preparatory work. International, governmental and non-governmental organizations liaising with the IEC also participate in this preparation. IEC collaborates closely with the International Organization for Standardization (ISO) in accordance with conditions determined by agreement between the two organizations.
2) The formal decisions or agreements of IEC on technical matters express, as nearly as possible, an international consensus of opinion on the relevant subjects since each technical committee has representation from all interested IEC National Committees.
3) IEC Publications have the form of recommendations for international use and are accepted by IEC National Committees in that sense. While all reasonable efforts are made to ensure that the technical content of IEC Publications is accurate, IEC cannot be held responsible for the way in which they are used or for any misinterpretation by any end user.
4) In order to promote international uniformity, IEC National Committees undertake to apply IEC Publications transparently to the maximum extent possible in their national and regional publications. Any divergence between any IEC Publication and the corresponding national or regional publication shall be clearly indicated in the latter.
5) IEC itself does not provide any attestation of conformity. Independent certification bodies provide conformity assessment services and, in some areas, access to IEC marks of conformity. IEC is not responsible for any services carried out by independent certification bodies.
6) All users should ensure that they have the latest edition of this publication.
7) No liability shall attach to IEC or its directors, employees, servants or agents including individual experts and members of its technical committees and IEC National Committees for any personal injury, property damage or other damage of any nature whatsoever, whether direct or indirect, or for costs (including legal fees) and expenses arising out of the publication, use of, or reliance upon, this IEC Publication or any other IEC Publications.
8) Attention is drawn to the Normative references cited in this publication. Use of the referenced publications is indispensable for the correct application of this publication.
9) Attention is drawn to the possibility that some of the elements of this IEC Publication may be the subject of patent rights. IEC shall not be held responsible for identifying any or all such patent rights.

International standard IEC 60601-2-76 has been prepared by IEC subcommittee 62D: Electromedical equipment, of IEC technical committee 62: Electrical equipment in medical practice.

The text of this International Standard is based on the following documents:

FDIS	Report on voting
62D/1554/FDIS	62D/1573/RVD

Full information on the voting for the approval of this International Standard can be found in the report on voting indicated in the above table.

This document has been drafted in accordance with the ISO/IEC Directives, Part 2.

Documents
Document Sharing Hub

Full document details: IEC 60601-2-76 2018

In this standard, the following print types are used:

– requirements and definitions: roman type;
– *test specifications: italic type;*
– informative material appearing outside of tables, such as notes, examples and references: in smaller type. Normative text of tables is also in a smaller type;
– TERMS DEFINED IN CLAUSE 3 OF THE GENERAL STANDARD, IN THIS PARTICULAR STANDARD OR AS NOTED: SMALL CAPITALS.

In referring to the structure of this standard, the term

– “clause” means one of the seventeen numbered divisions within the table of contents, inclusive of all subdivisions (e.g. Clause 7 includes subclauses 7.1, 7.2, etc.);
– “subclause” means a numbered subdivision of a clause (e.g. 7.1, 7.2 and 7.2.1 are all subclauses of Clause 7).

References to clauses within this standard are preceded by the term “Clause” followed by the clause number. References to subclauses within this particular standard are by number only.

In this standard, the conjunctive “or” is used as an “inclusive or” so a statement is true if any combination of the conditions is true.

The verbal forms used in this standard conform to usage described in Clause 7 of the ISO/IEC Directives, Part 2. For the purposes of this standard, the auxiliary verb:

– “shall” means that compliance with a requirement or a test is mandatory for compliance with this standard;
– “should” means that compliance with a requirement or a test is recommended but is not mandatory for compliance with this standard;
– “may” is used to describe a permissible way to achieve compliance with a requirement or test.

An asterisk (*) as the first character of a title or at the beginning of a paragraph or table title indicates that there is guidance or rationale related to that item in Annex AA.

A list of all parts of the IEC 60601 series, published under the general title *Medical electrical equipment*, can be found on the IEC website.

The committee has decided that the contents of this document will remain unchanged until the stability date indicated on the IEC website under "http://webstore.iec.ch" in the data related to the specific document. At this date, the document will be

- reconfirmed,
- withdrawn,
- replaced by a revised edition, or
- amended.

Documents
Document Sharing Hub

Full document details: IEC 60601-2-76 2018

INTRODUCTION

The minimum safety requirements specified in this particular standard are considered to provide for a practical degree of safety in the operation of LOW ENERGY IONIZED GAS HAEMOSTASIS EQUIPMENT.

This particular standard amends and supplements IEC 60601-1:2005 and IEC 60601-1:2005/AMD1:2012 *Medical electrical equipment – Part 1: General requirements for basic safety and essential performance*, hereinafter referred to as the general standard (see 201.1.4).

The requirements are followed by specifications for the relevant tests.

A "Particular guidance and rationale" section giving some explanatory notes, where appropriate, about the more important requirements is included in Annex AA.

Clauses or subclauses for which there are explanatory notes in Annex AA are marked with an asterisk (*).

It is considered that knowledge of the reasons for these requirements will not only facilitate the proper application of the standard but will, in due course, expedite any revision necessitated by changes in clinical practice or as a result of developments in technology. However, this annex does not form part of the requirements of this document.

Documents
Document Sharing Hub

Full document details: IEC 60601-2-76 2018

MEDICAL ELECTRICAL EQUIPMENT –

Part 2-76: Particular requirements for the basic safety and essential performance of low energy ionized gas haemostasis equipment

201.1 Scope, object and related standards

Clause 1 of the general standard[1] applies, except as follows:

201.1.1 Scope

Replacement:

This part of IEC 60601 applies to the BASIC SAFETY and ESSENTIAL PERFORMANCE of LOW ENERGY IONIZED GAS HAEMOSTASIS EQUIPMENT hereafter referred to as ME EQUIPMENT.

HAZARDS inherent in the intended physiological function of ME EQUIPMENT or ME SYSTEMS within the scope of this document are not covered by specific requirements in this document except in 7.2.13 and 8.4.1 of the general standard.

NOTE See also 4.2 of the general standard.

201.1.2 Object

Replacement:

The object of this particular standard is to establish particular requirements for BASIC SAFETY and ESSENTIAL PERFORMANCE of LOW ENERGY IONIZED GAS HAEMOSTASIS EQUIPMENT as defined in 201.3.207.

201.1.3 Collateral standards

Addition:

This particular standard refers to those applicable collateral standards that are listed in Clause 2 of the general standard and Clause 201.2 of this particular standard.

201.1.4 Particular standards

Replacement:

In the IEC 60601 series, particular standards may modify, replace or delete requirements contained in the general standard and collateral standards as appropriate for the particular ME EQUIPMENT under consideration, and may add other BASIC SAFETY and ESSENTIAL PERFORMANCE requirements.

A requirement of a particular standard takes priority over the general standard.

---

1 The general standard is IEC 60601-1:2005 and IEC 60601-1:2005/AMD1:2012, *Medical electrical equipment – Part 1: General requirements for basic safety and essential performance.*

AVA Documents Document Sharing Hub

Full document details: IEC 60601-2-76 2018

For brevity, IEC 60601-1:2005 and IEC 60601-1:2005/AMD1:2012 are referred to in this particular standard as the general standard. Collateral standards are referred to by their document numbers.

The numbering of clauses and subclauses of this particular standard corresponds to that of the general standard with the prefix “201” (e.g. 201.1 in this document addresses the content of Clause 1 of the general standard) or applicable collateral standard with the prefix “20x” where x is the final digit(s) of the collateral standard document number (e.g. 202.4 in this particular standard addresses the content of Clause 4 of the IEC 60601-1-2 collateral standard, 203.4 in this particular standard addresses the content of Clause 4 of the 60601-1-3 collateral standard, etc.). The changes to the text of the general standard are specified by the use of the following words:

"*Replacement*" means that the clause or subclause of the general standard or applicable collateral standard is replaced completely by the text of this particular standard.

"*Addition*" means that the text of this particular standard is additional to the requirements of the general standard or applicable collateral standard.

"*Amendment*" means that the clause or subclause of the general standard or applicable collateral standard is amended as indicated by the text of this particular standard.

Subclauses, figures or tables which are additional to those of the general standard are numbered starting from 201.101, however because definitions in the general standard are numbered 3.1 through 3.147 additional definitions in this document are numbered beginning from 201.3.201. Additional annexes are lettered AA, BB, etc., and additional items aa), bb), etc.

Subclauses, figures or tables which are additional to those of a collateral standard are numbered starting from 20x, where “x” is the number of the collateral standard, e.g. 202 for IEC 60601-1-2, 203 for IEC 6060-1-3, etc.

The term "this document" is used to make reference to the general standard, any applicable collateral standards and this particular standard taken together.

Where there is no corresponding clause or subclause in this particular standard, the clause or subclause of the general standard or applicable collateral standard, although possibly not relevant, applies without modification; where it is intended that any part of the general standard or applicable collateral standard, although possibly relevant, is not to be applied, a statement to that effect is given in this particular standard.

201.2 Normative references

NOTE Informative references are listed in the bibliography.

Clause 2 of the general standard applies, except as follows:

Addition:

IEC 60601-1:2005, *Medical electrical equipment – Part 1: General requirements for basic safety and essential performance*
IEC 60601-1:2005/AMD1:2012

Documents
Document Sharing Hub

Full document details: IEC 60601-2-76 2018

201.3 Terms and definitions

For the purposes of this document, the terms and definitions given in IEC 60601-1 and the following apply.

ISO and IEC maintain terminological databases for use in standardization at the following addresses:

- IEC Electropedia: available at http://www.electropedia.org/
- ISO Online browsing platform: available at http://www.iso.org/obp

Replacement of NOTE 1 by the following:

NOTE 1 Where the terms “voltage” and “current” are used in this document, they mean the RMS values of an alternating, direct or composite voltage or current averaged over 1 s unless stated otherwise.

Addition:

201.3.201
FINGERSWITCH
device generally included with an IONIZED GAS ACCESSORY which, when activated by the OPERATOR, enables IONIZED GAS output to be produced and, when released, disables the IONIZED GAS output

201.3.202
*** HAEMOSTASIS**
control or prevention of bleeding from capillaries and similar small blood vessels in biological tissues using IONIZED GAS

201.3.203
IONIZED GAS
gas composed in part of charged particles and excited atoms or molecules

Note 1 to entry: The frequency used to create the IONIZED GAS is called the ionization frequency.

201.3.204
IONIZED GAS ACCESSORY
ACCESSORY intended to direct IONIZED GAS to the PATIENT

201.3.205
IONIZED GAS ACCESSORY CABLE
portion of the IONIZED GAS ACCESSORY between the IONIZED GAS CONNECTOR and the part held by the OPERATOR

201.3.206
IONIZED GAS CONNECTOR
part of a IONIZED GAS ACCESSORY intended for connection to the output TERMINAL DEVICE of LOW ENERGY IONIZED GAS HAEMOSTASIS EQUIPMENT

201.3.207
*** LOW ENERGY IONIZED GAS HAEMOSTASIS EQUIPMENT**
ME EQUIPMENT including an IONIZED GAS ACCESSORY and any other associated ACCESSORIES which uses IONIZED GAS for the purpose of HAEMOSTASIS in biological tissue and limits the ionization frequency LEAKAGE CURRENT to 20 mA or less

201.3.208
MAXIMUM IONIZATION VOLTAGE
maximum peak voltage used to create the IONIZED GAS under NORMAL CONDITION

Documents
Document Sharing Hub
Full document details: IEC 60601-2-76 2018

201.3.209
PLASMA FLARE
visible IONIZED GAS emitted from the IONIZED GAS ACCESSORY

201.4 * General requirements

Clause 4 of the general standard applies.

NOTE See Annex AA for additional information.

201.5 General requirements for testing ME EQUIPMENT

Clause 5 of the general standard applies.

201.6 Classification of ME EQUIPMENT and ME SYSTEMS

Clause 6 of the general standard applies.

201.7 ME EQUIPMENT identification, marking and documents

Clause 7 of the general standard applies, except as follows:

201.7.9.2.1 * General

Replace the third dashed item by the following dashed items:

– advice for the OPERATOR to avoid LOW ENERGY IONIZED GAS HAEMOSTASIS EQUIPMENT output settings that may exceed the rating(s) of the IONIZED GAS ACCESSORY;
– any known contraindication(s) to the use of the ME EQUIPMENT. For LOW ENERGY IONIZED GAS HAEMOSTASIS EQUIPMENT this shall include, at minimum, a statement that the equipment is not intended for use where blood flow is at arterial pressure; and

Additional subclause:

201.7.9.2.2.101 Additional warnings

The instructions for use shall include the following warnings:

1) the IONIZED GAS ACCESSORY CABLE should be positioned in such a way that contact with the PATIENT or other leads is avoided;
2) for PATIENTS with cardiac pacemakers or other active implants, a possible HAZARD exists because interference with the action of the pacemaker may occur, or the pacemaker may be damaged. In case of doubt, approved qualified advice should be obtained.

201.7.9.2.14 ACCESSORIES, supplementary equipment, used material

Addition:

The instructions for use shall include:

Advice for the OPERATOR to avoid using the IONIZED GAS ACCESSORY with LOW ENERGY IONIZED GAS HAEMOSTASIS EQUIPMENT output settings that may exceed the rating(s) of the ACCESSORY.

Documents
Document Sharing Hub
Full document details: IEC 60601-2-76 2018

201.7.9.3 Technical description

201.7.9.3.1 General

Addition:

– Voltage output data. The MAXIMUM IONIZATION VOLTAGE.

201.8 Protection against electrical HAZARDS from ME EQUIPMENT

Clause 8 of the general standard applies, except as follows:

201.8.3 * Classification of APPLIED PARTS

Addition:

aa) IONIZED GAS ACCESSORIES shall be considered APPLIED PARTS, and shall be TYPE BF or TYPE CF because the PLASMA FLARE provides a conductive path between the IONIZED GAS ACCESSORY and the PATIENT.

Additional subclause:

201.8.4.101 Excitation current monitoring circuits

Circuits monitoring the flow of current used to generate the IONIZED GAS shall be isolated from earth by at least two MEANS OF PATIENT PROTECTION.

201.8.5.1.2 * MEANS OF PATIENT PROTECTION (MOPP)

Amendment:

For IONIZED GAS ACCESSORIES including IONIZED GAS ACCESSORY CABLES and IONIZED GAS CONNECTORS, separation between the circuits used to generate the IONIZED GAS and the ENCLOSURE including SIGNAL INPUT PARTS and SIGNAL OUTPUT PARTS need not be subjected to the dielectric strength test of 201.8.8.3.

The CREEPAGE DISTANCES and AIR CLEARANCES of the equipment other than IONIZED GAS ACCESSORIES tested according to 201.8.8.3.101 and that are intended to prevent contact with circuits used to generate the IONIZED GAS shall be as follows:

a) For an ionization frequency less than 1 kHz, the general standard applies.

b) For an ionization frequency between 1 kHz and 200 kHz, the greater value of the following calculation is chosen:

CREEPAGE DISTANCE: $16 - \frac{13f}{200}$ mm/kV, or $21 - \frac{17{,}3f}{200}$ mm

AIR CLEARANCE: $9{,}14 - \frac{6{,}14f}{200}$ mm/kV, or $12{,}2 - \frac{8{,}2f}{200}$ mm

where

f is the frequency in kHz.

c) For an ionization frequency higher than 200 kHz, the CREEPAGE DISTANCE and AIR CLEARANCE is at least 3 mm/kV or 4 mm, whichever is the greater.

The reference voltage shall be the maximum peak voltage.

Documents
Document Sharing Hub
Full document details: IEC 60601-2-76 2018

This requirement does not apply for components when the adequacy of ratings can be demonstrated, for example by component manufacturers' ratings or by the dielectric strength test of 201.8.8.3.

This requirement described in 201.8.5.1.2 does not apply to IONIZED GAS ACCESSORIES. On the other hand, the requirements and tests for IONIZED GAS ACCESSORIES are found in 201.8.8.3.

201.8.7.3 Allowable values

Amendment:

Item e) does not apply

Additional subclause:

201.8.7.3.101 * LEAKAGE CURRENTS

a) In order to prevent burning or neural stimulation, the LEAKAGE CURRENT from the PLASMA FLARE shall not exceed 20 mA.

Compliance is checked as follows:

The LEAKAGE CURRENT produced by the PLASMA FLARE is measured according to Figure 201.101. The handpiece shall be positioned to ensure the PLASMA FLARE strikes the centre surface of the copper plate but does not close off the gas flow. The LEAKAGE CURRENT shall be measured using an RF current meter with an accuracy of at least ± 2 % at 20 mA and a measurement range of at least 30 kHz through 20 MHz.

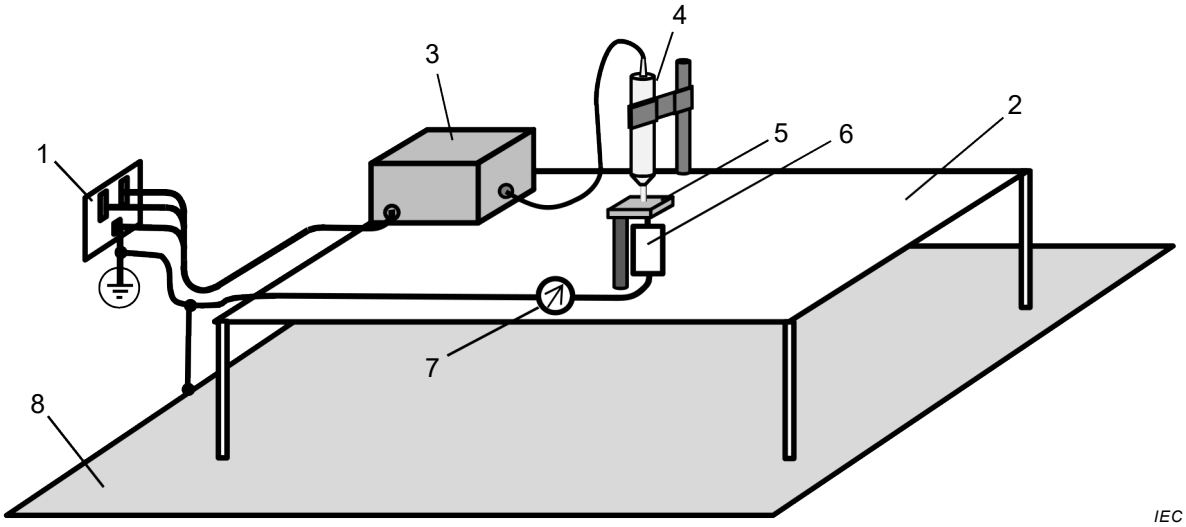

Key

1 supply mains

2 table, made of insulating material

3 Equipment Under Test (EUT)

4 handpiece

5 flat copper plate (100 mm × 100 mm × 1 mm)

6 200 Ω non-inductive resistor

7 RF current meter

8 earthed conductive plane

Figure 201.101 – Measurement of LEAKAGE CURRENT from the PLASMA FLARE

Documents
Document Sharing Hub
Full document details: IEC 60601-2-76 2018

b) In order to prevent electric shock, PATIENT LEAKAGE CURRENT from the PLASMA FLARE shall not exceed the limits from Table 3 of the general standard for the declared APPLIED PART type.

Compliance is checked as follows:

The PATIENT LEAKAGE CURRENT produced by the PLASMA FLARE is measured according to Figure 201.102 using the MD (measuring device) as defined in Figure 12 of the general standard.

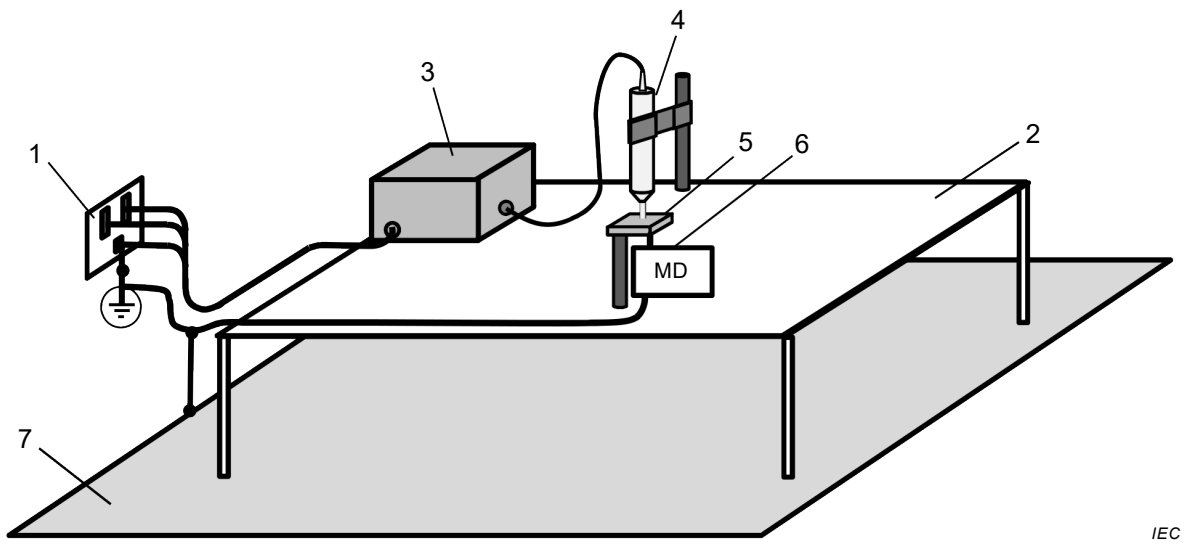

Key

1 supply mains

2 table, made of insulating material

3 Equipment Under Test (EUT)

4 handpiece

5 flat copper plate (100 mm × 100 mm × 1 mm)

6 Measuring Device (MD) from the general standard

7 earthed conductive plane

Figure 201.102 – Measurement of low frequency PATIENT LEAKAGE CURRENT

c) LEAKAGE CURRENT limits for IONIZED GAS ACCESSORY CABLES shall be determined as follows:

Where the MAXIMUM IONIZATION VOLTAGE is conducted by two physically separated cables, the LEAKAGE CURRENT limit for each cable shall be:

$$I_{\text{leakage}}\,(\text{mA}) = 2{,}0 \times 10^{-5} \times d \times L \times f_{\text{test}} \times U_{\text{peak}}$$

where

d is the smallest outer dimension of the insulation in mm,

f_{test} is the test voltage frequency in kHz,

L is the length of sample insulation through which LEAKAGE CURRENT passes, in cm, and

U_{peak} is the lesser of the MAXIMUM IONIZATION VOLTAGE or 400 V_{peak}.

Documents
Document Sharing Hub
Full document details: IEC 60601-2-76 2018

The corresponding limit for cables where the gas ionization voltage is conducted inside a single cable (such as a coaxial cable) or within a single handpiece, the LEAKAGE CURRENT limit shall be:

$$I_{\text{leakage}}\ (\text{mA}) = 4{,}0 \times 10^{-5} \times d \times L \times f_{\text{test}} \times U_{\text{peak}}$$

Compliance is checked as follows:

LEAKAGE CURRENTS from the IONIZED GAS ACCESSORY CABLE shall be measured utilizing a RF current meter with an accuracy of at least ± 2 % at 20 mA and a measurement range of at least 30 kHz through 20 MHz.

The following test is performed on each single output of the equipment in turn:

1) *IONIZED GAS ACCESSORY CABLES, including those that are not being tested but that are connected in NORMAL USE, are arranged as shown in Figure 201.103.*
2) *Wrap the entire length of the cable being tested (excluding IONIZED GAS CONNECTORS and the handpiece) with a porous cloth soaked in 0,9 % saline solution.*
3) *Wrap the mid-section of the saline-soaked cloth with metal foil covering a 10 cm length connected to earth through a 200 Ω (non-inductive) resistor.*
4) *The LEAKAGE CURRENT is then measured through the 200 Ω resistor while the equipment is operated to generate a test voltage of the lesser of the MAXIMUM IONIZATION VOLTAGE or 400 V_{peak}.*

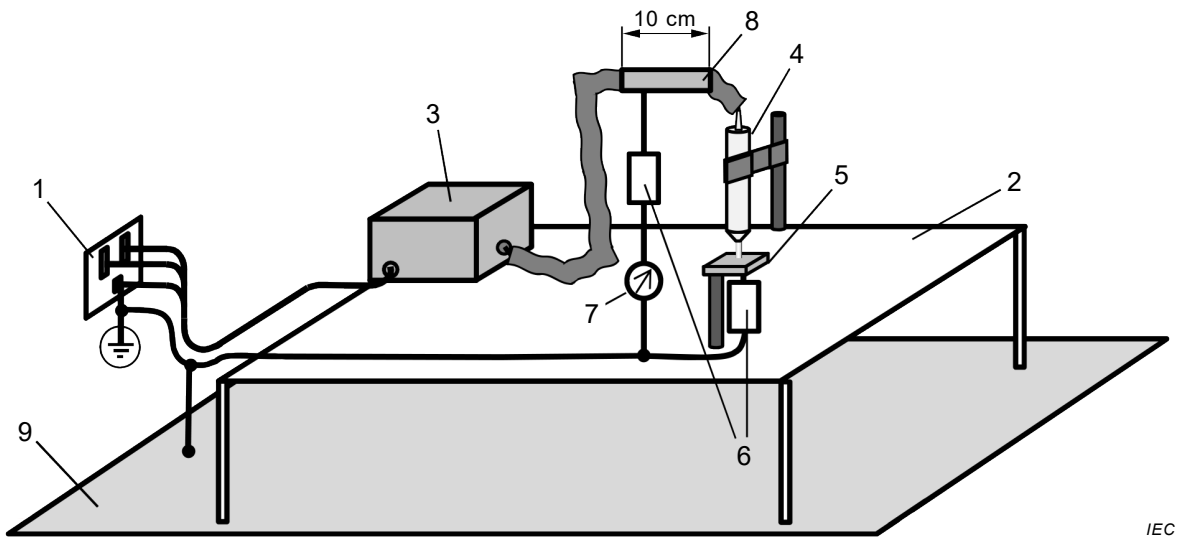

Key

1 supply mains
2 table, made of insulating material
3 Equipment Under Test (EUT)
4 handpiece
5 flat copper plate (100 mm × 100 mm × 1 mm)
6 200 Ω non-inductive resistors (2x)
7 RF current meter
8 saline-soaked wrap covered by 10 cm metal foil
9 earthed conductive plane

Figure 201.103 – Measurement of IONIZED GAS ACCESSORY CABLE LEAKAGE CURRENT

AVA Documents
Document Sharing Hub
Full document details: IEC 60601-2-76 2018

201.8.8.3 Dielectric strength

Addition:

The requirements and tests for IONIZED GAS ACCESSORIES including IONIZED GAS ACCESSORY CABLES and IONIZED GAS CONNECTORS are given in 201.8.8.3.101.

Additional test conditions:

aa) If, during dielectric strength testing of solid insulation forming MEANS OF PATIENT PROTECTION, a breakdown or flashover occurs through the atmosphere at the AIR CLEARANCE specified in 8.9 of the general standard and 201.8.5.1.2 of this document, an insulating barrier may be placed to prevent this breakdown so that the protective insulation can be tested.

bb) If, during dielectric strength testing of solid insulation forming MEANS OF PATIENT PROTECTION, a breakdown or flashover occurs at the CREEPAGE DISTANCE specified in 8.9 of the general standard and 201.8.5.1.2 of this document, then the test shall be carried out on the components which provide MEANS OF PATIENT PROTECTION, such as transformers, relays, optocouplers or CREEPAGE DISTANCES on printed circuit boards.

Additional subclauses:

201.8.8.3.101 * IONIZED GAS ACCESSORY insulation

IONIZED GAS ACCESSORIES including IONIZED GAS ACCESSORY CABLES and IONIZED GAS CONNECTORS shall be sufficiently insulated to mitigate unintended thermal burn risk to the PATIENT and OPERATOR under conditions of NORMAL USE.

Compliance is checked as follows:

Test samples, other than those marked for single use, shall have undergone the sterilization methods and number of cycles as outlined in the instructions for use. See 7.9.2.12 in the general standard.

The insulated parts of IONIZED GAS ACCESSORY CABLES *excluding* IONIZED GAS CONNECTORS *shall be preconditioned by immersion in 0,9 % saline for 12 h. Operative conductors which may have been exposed in preparation for testing, as well as the insulation of the cords of* IONIZED GAS ACCESSORIES *within 100 mm of the ends, shall be protected from contact with saline. Upon completion of this preconditioning, excess saline shall be removed from surfaces and cavities by shaking and/or wiping with a dry cloth.*

Immediately following saline preconditioning, applicable electrical testing shall be conducted in the following order:

– *IONIZED GAS ACCESSORY ionization frequency dielectric strength (201.8.8.3.102);*

– *IONIZED GAS ACCESSORY mains frequency dielectric strength (201.8.8.3.103).*

201.8.8.3.102 IONIZED GAS ACCESSORY ionization frequency dielectric strength

The insulation applied to an IONIZED GAS ACCESSORY shall be capable of withstanding a voltage of 120 % of the MAXIMUM IONIZATION VOLTAGE without breakdown when tested at the nominal ionization frequency.

Compliance is checked as follows:

The insulation of the IONIZED GAS ACCESSORY*, including the handpiece, shall be wrapped in a porous cloth soaked in 0,9 % saline. This cloth shall cover the entire exterior surface of the insulation. One output pole of the test voltage source shall be connected to the porous cloth*

AVA Documents
Document Sharing Hub

Full document details: IEC 60601-2-76 2018

and the other pole of the test voltage source shall be connected to all of the conductor(s) of the IONIZED GAS ACCESSORY.

The peak test voltage is monitored between the test voltage source output poles. The output of the test voltage source is then increased until the peak voltage equals 120 % of the MAXIMUM IONIZATION VOLTAGE *and maintained for 30 s in such a manner that it stresses the insulation of the test sample. The frequency of the test voltage shall be the nominal frequency used to create the ionized gas. No breakdown of the insulation material shall occur and the same insulation shall subsequently be tested at mains frequency according to 201.8.8.3.103.*

201.8.8.3.103 IONIZED GAS ACCESSORY mains frequency dielectric strength

The insulation applied to a IONIZED GAS ACCESSORY, including those portions of insulation having been tested at the ionization frequency according to 201.8.8.3.102, shall withstand a direct current (DC) or mains frequency peak voltage of 1 000 V greater than the MAXIMUM IONIZATION VOLTAGE specified by the MANUFACTURER of the IONIZED GAS ACCESSORY.

Compliance is tested as follows:

The test voltage source shall produce a direct current (DC) or mains frequency signal. The test duration shall be 30 s for IONIZED GAS ACCESSORY *handpieces and* IONIZED GAS CONNECTORS. *The test duration for* IONIZED GAS ACCESSORY CABLES *shall be 5 min. Although corona discharge may occur, no breakdown of the insulation or flashover shall occur. Immediately after this dielectric strength test, any incorporated* FINGERSWITCH *shall be operated 10 times. An ohmmeter shall be used to test whether the switching mechanism operates as intended to ensure that, when connected to* LOW ENERGY IONIZED GAS HAEMOSTASIS EQUIPMENT, *the* IONIZED GAS *output will be disabled when the* FINGERSWITCH *is released.*

The insulated parts of IONIZED GAS CONNECTORS *more than 10 mm* CREEPAGE DISTANCE *from exposed operative conductors shall be wrapped with a porous cloth soaked in 0,9 % saline. The midsection of the cloth is then wrapped with metal foil. The test voltage is applied between the foil and all of the operative* IONIZED GAS CONNECTOR *contacts.*

The entire length of the insulation IONIZED GAS ACCESSORY CABLES, *including that portion previously tested according to this subclause, but exclusive of the sections within 100 mm of the ends, shall be immersed in a bath of 0,9 % saline. The test voltage is simultaneously applied between a conductive electrode immersed in the saline bath and all of the conductors in the* IONIZED GAS CONNECTOR.

IONIZED GAS ACCESSORY *handpieces complete with any detachable electrodes are prepared for testing and connected to the test voltage source using the same techniques as described above. The saline-soaked cloth and foil applied for that test may be left in place for this test provided care is taken to ensure that the cloth remains thoroughly wetted.*

201.8.9.1.1 General

Addition:

– for CREEPAGE DISTANCES and AIR CLEARANCE intended to provide separation from MAXIMUM IONIZATION GAS ACCESSORY VOLTAGE circuits in parts of the ME EQUIPMENT other than the IONIZATION GAS ACCESSORY, only the separation defined in 201.8.5.1.2 shall apply.

201.8.9.1.5 ME EQUIPMENT rated for high altitude

Addition:

This requirement does not apply to separation distances between MAXIMUM IONIZATION VOLTAGE circuits and the ENCLOSURE including SIGNAL INPUT/OUTPUT PARTS and between different MAXIMUM IONIZATION VOLTAGE circuits.

AVA Documents Document Sharing Hub

Full document details: IEC 60601-2-76 2018

201.8.10.4.1 Limitation of operating voltages

Subclause 8.10.4.1 of the general standard does not apply. See 201.8.10.4.101.

Additional subclauses:

201.8.10.4.101 Switch sensors

201.8.10.4.101.1 General requirements for IONIZED GAS activation switches

LOW ENERGY IONIZED GAS HAEMOSTASIS EQUIPMENT shall be provided with a switch requiring continuous activation in order to energize and enable flow of the IONIZED GAS.

The switch shall be supplied from a power source isolated from the MAINS PART and from earth. The power source shall have a voltage not exceeding 12 V, if a conductive connection to the APPLIED PART exists, and not exceeding 24 V AC or 34 V DC in other cases.

NOTE This requirement applies to voltages appearing within the switch. Common-mode ionization excitation voltages should be disregarded.

Under SINGLE FAULT CONDITION the switch shall not cause low-frequency PATIENT LEAKAGE CURRENT(S) exceeding the allowable limits (see 201.8.7.3).

Compliance is checked by inspection, functional testing, and by measurement of voltage and LEAKAGE CURRENT(S).

Where the switch is provided with input terminals intended for connection to external electrical switch contacts, it shall not be possible to activate any IONIZED GAS OUTPUT of the LOW ENERGY IONIZED GAS HAEMOSTASIS EQUIPMENT when the input terminals are bridged by a non-inductive resistance equal to or greater than 1 000 Ω.

Compliance is checked by a functional test.

201.8.10.4.101.2 Footswitches

Footswitches shall comply with the following requirement.

The force required to actuate the switch shall be not less than 10 N, applied over an area of 625 mm^2 anywhere on the operating surface of the footswitch.

Compliance is checked by measurement of the actuating force.

Documents
Document Sharing Hub

Full document details: IEC 60601-2-76 2018