IEC 60603-7-81

Edition 1.0 2015-12

INTERNATIONAL STANDARD

NORME INTERNATIONALE

Connectors for electronic equipment – Part 7-81: Detail specification for 8-way, shielded, free and fixed connectors, for data transmissions with frequencies up to 2 000 MHz

Connecteurs pour équipements électroniques – Partie 7-81: Spécification particulière pour les fiches et les embases blindées à 8 voies pour la transmission de données à des fréquences jusqu'à 2 000 MHz

IEC 60603-7-81:2015-12(en-fr)

Documents
Document Sharing Hub

Full document details: IEC 60603-7-81 2015

THIS PUBLICATION IS COPYRIGHT PROTECTED
Copyright © 2015 IEC, Geneva, Switzerland

All rights reserved. Unless otherwise specified, no part of this publication may be reproduced or utilized in any form or by any means, electronic or mechanical, including photocopying and microfilm, without permission in writing from either IEC or IEC's member National Committee in the country of the requester. If you have any questions about IEC copyright or have an enquiry about obtaining additional rights to this publication, please contact the address below or your local IEC member National Committee for further information.

Droits de reproduction réservés. Sauf indication contraire, aucune partie de cette publication ne peut être reproduite ni utilisée sous quelque forme que ce soit et par aucun procédé, électronique ou mécanique, y compris la photocopie et les microfilms, sans l'accord écrit de l'IEC ou du Comité national de l'IEC du pays du demandeur. Si vous avez des questions sur le copyright de l'IEC ou si vous désirez obtenir des droits supplémentaires sur cette publication, utilisez les coordonnées ci-après ou contactez le Comité national de l'IEC de votre pays de résidence.

IEC Central Office
3, rue de Varembé
CH-1211 Geneva 20
Switzerland

Tel.: +41 22 919 02 11
Fax: +41 22 919 03 00
info@iec.ch
www.iec.ch

About the IEC
The International Electrotechnical Commission (IEC) is the leading global organization that prepares and publishes International Standards for all electrical, electronic and related technologies.

About IEC publications
The technical content of IEC publications is kept under constant review by the IEC. Please make sure that you have the latest edition, a corrigenda or an amendment might have been published.

IEC Catalogue - webstore.iec.ch/catalogue
The stand-alone application for consulting the entire bibliographical information on IEC International Standards, Technical Specifications, Technical Reports and other documents. Available for PC, Mac OS, Android Tablets and iPad.

IEC publications search - www.iec.ch/searchpub
The advanced search enables to find IEC publications by a variety of criteria (reference number, text, technical committee,…). It also gives information on projects, replaced and withdrawn publications.

IEC Just Published - webstore.iec.ch/justpublished
Stay up to date on all new IEC publications. Just Published details all new publications released. Available online and also once a month by email.

Electropedia - www.electropedia.org
The world's leading online dictionary of electronic and electrical terms containing more than 30 000 terms and definitions in English and French, with equivalent terms in 15 additional languages. Also known as the International Electrotechnical Vocabulary (IEV) online.

IEC Glossary - std.iec.ch/glossary
More than 60 000 electrotechnical terminology entries in English and French extracted from the Terms and Definitions clause of IEC publications issued since 2002. Some entries have been collected from earlier publications of IEC TC 37, 77, 86 and CISPR.

IEC Customer Service Centre - webstore.iec.ch/csc
If you wish to give us your feedback on this publication or need further assistance, please contact the Customer Service Centre: csc@iec.ch.

A propos de l'IEC
La Commission Electrotechnique Internationale (IEC) est la première organisation mondiale qui élabore et publie des Normes internationales pour tout ce qui a trait à l'électricité, à l'électronique et aux technologies apparentées.

A propos des publications IEC
Le contenu technique des publications IEC est constamment revu. Veuillez vous assurer que vous possédez l'édition la plus récente, un corrigendum ou amendement peut avoir été publié.

Catalogue IEC - webstore.iec.ch/catalogue
Application autonome pour consulter tous les renseignements bibliographiques sur les Normes internationales, Spécifications techniques, Rapports techniques et autres documents de l'IEC. Disponible pour PC, Mac OS, tablettes Android et iPad.

Recherche de publications IEC - www.iec.ch/searchpub
La recherche avancée permet de trouver des publications IEC en utilisant différents critères (numéro de référence, texte, comité d'études,…). Elle donne aussi des informations sur les projets et les publications remplacées ou retirées.

IEC Just Published - webstore.iec.ch/justpublished
Restez informé sur les nouvelles publications IEC. Just Published détaille les nouvelles publications parues. Disponible en ligne et aussi une fois par mois par email.

Electropedia - www.electropedia.org
Le premier dictionnaire en ligne de termes électroniques et électriques. Il contient plus de 30 000 termes et définitions en anglais et en français, ainsi que les termes équivalents dans 15 langues additionnelles. Egalement appelé Vocabulaire Electrotechnique International (IEV) en ligne.

Glossaire IEC - std.iec.ch/glossary
Plus de 60 000 entrées terminologiques électrotechniques, en anglais et en français, extraites des articles Termes et Définitions des publications IEC parues depuis 2002. Plus certaines entrées antérieures extraites des publications des CE 37, 77, 86 et CISPR de l'IEC.

Service Clients - webstore.iec.ch/csc
Si vous désirez nous donner des commentaires sur cette publication ou si vous avez des questions contactez-nous: csc@iec.ch.

Documents
Document Sharing Hub

Full document details: IEC 60603-7-81 2015

IEC 60603-7-81

Edition 1.0 2015-12

INTERNATIONAL STANDARD

NORME INTERNATIONALE

Connectors for electronic equipment – Part 7-81: Detail specification for 8-way, shielded, free and fixed connectors, for data transmissions with frequencies up to 2 000 MHz

Connecteurs pour équipements électroniques – Partie 7-81: Spécification particulière pour les fiches et les embases blindées à 8 voies pour la transmission de données à des fréquences jusqu'à 2 000 MHz

INTERNATIONAL
ELECTROTECHNICAL
COMMISSION

COMMISSION
ELECTROTECHNIQUE
INTERNATIONALE

ICS 31.220.10

ISBN 978-2-8322-3009-1

Warning! Make sure that you obtained this publication from an authorized distributor.
Attention! Veuillez vous assurer que vous avez obtenu cette publication via un distributeur agréé.

® Registered trademark of the International Electrotechnical Commission
Marque déposée de la Commission Electrotechnique Internationale

Documents
Document Sharing Hub

Full document details: IEC 60603-7-81 2015

CONTENTS

FOREWORD 4
INTRODUCTION 6
1 Scope 8
2 Normative references 8
3 Terms and definitions 9
4 Cable terminations and internal connections – Fixed and free connectors 9
5 Gauge 9
6 Characteristics 9
6.1 General 9
6.1.1 Overview 9
6.1.2 Pin and pair grouping assignment 9
6.1.3 Classification into climatic category 9
6.2 Electrical characteristics 10
6.2.1 General 10
6.2.2 Transfer impedance 10
6.3 Transmission characteristics 10
6.3.1 General 10
6.3.2 Insertion loss 10
6.3.3 Return loss 10
6.3.4 Propagation delay 11
6.3.5 Delay skew 11
6.3.6 NEXT loss 11
6.3.7 Power sum NEXT loss 11
6.3.8 FEXT Loss 12
6.3.9 Power sum FEXT loss 12
6.3.10 Transverse conversion loss 12
6.3.11 Transverse conversion transfer loss 12
6.3.12 Coupling attenuation 12
6.3.13 Power sum alien (exogenous) NEXT 13
6.3.14 Power sum alien (exogenous) FEXT 13
6.3.15 Mechanical 13
6.3.16 Pin assignment 13
7 Tests and test schedule 14
7.1 General 14
7.2 Arrangement for contact resistance test 14
7.3 Arrangement for vibration test 14
7.4 Test procedures and measuring methods 14
7.5 Preconditioning 14
7.6 Wiring and mounting of specimens 14
7.6.1 Wiring 14
7.6.2 Mounting 14
8 Test schedules 14
8.1 General 14
8.2 Basic (minimum) test schedule 14
8.3 Full test schedule 14

AVA Documents
Document Sharing Hub
Full document details: IEC 60603-7-81 2015

8.3.1 General 14
8.3.2 Test group P preliminary 14
8.3.3 Test group AP 15
8.3.4 Test group BP 15
8.3.5 Test group CP 15
8.3.6 Test group DP 15
8.3.7 Test group EP 15
8.3.8 Test group FP 16
8.3.9 Test group GP 16
Bibliography 17

Table 1 – Test Group EP 15

Documents
Document Sharing Hub

Full document details: IEC 60603-7-81 2015

INTERNATIONAL ELECTROTECHNICAL COMMISSION

CONNECTORS FOR ELECTRONIC EQUIPMENT –

Part 7-81: Detail specification for 8-way, shielded, free and fixed connectors, for data transmissions with frequencies up to 2 000 MHz

FOREWORD

1) The International Electrotechnical Commission (IEC) is a worldwide organization for standardization comprising all national electrotechnical committees (IEC National Committees). The object of IEC is to promote international co-operation on all questions concerning standardization in the electrical and electronic fields. To this end and in addition to other activities, IEC publishes International Standards, Technical Specifications, Technical Reports, Publicly Available Specifications (PAS) and Guides (hereafter referred to as "IEC Publication(s)"). Their preparation is entrusted to technical committees; any IEC National Committee interested in the subject dealt with may participate in this preparatory work. International, governmental and non-governmental organizations liaising with the IEC also participate in this preparation. IEC collaborates closely with the International Organization for Standardization (ISO) in accordance with conditions determined by agreement between the two organizations.
2) The formal decisions or agreements of IEC on technical matters express, as nearly as possible, an international consensus of opinion on the relevant subjects since each technical committee has representation from all interested IEC National Committees.
3) IEC Publications have the form of recommendations for international use and are accepted by IEC National Committees in that sense. While all reasonable efforts are made to ensure that the technical content of IEC Publications is accurate, IEC cannot be held responsible for the way in which they are used or for any misinterpretation by any end user.
4) In order to promote international uniformity, IEC National Committees undertake to apply IEC Publications transparently to the maximum extent possible in their national and regional publications. Any divergence between any IEC Publication and the corresponding national or regional publication shall be clearly indicated in the latter.
5) IEC itself does not provide any attestation of conformity. Independent certification bodies provide conformity assessment services and, in some areas, access to IEC marks of conformity. IEC is not responsible for any services carried out by independent certification bodies.
6) All users should ensure that they have the latest edition of this publication.
7) No liability shall attach to IEC or its directors, employees, servants or agents including individual experts and members of its technical committees and IEC National Committees for any personal injury, property damage or other damage of any nature whatsoever, whether direct or indirect, or for costs (including legal fees) and expenses arising out of the publication, use of, or reliance upon, this IEC Publication or any other IEC Publications.
8) Attention is drawn to the Normative references cited in this publication. Use of the referenced publications is indispensable for the correct application of this publication.

International Standard IEC 60603-7-81 has been prepared by subcommittee 48B: Electrical connectors, of IEC technical committee 48: Electrical connectors and mechanical structures for electrical and electronic equipment.

The text of this standard is based on the following documents:

FDIS	Report on voting
48B/2451/FDIS	48B/2464/RVD

Full information on the voting for the approval of this standard can be found in the report on voting indicated in the above table.

This publication has been drafted in accordance with the ISO/IEC Directives, Part 2.

A list of all parts in the IEC 60603 series, published under the general title *Connectors for electronic equipment*, can be found on the IEC website.

Documents
Document Sharing Hub

Full document details: IEC 60603-7-81 2015

The committee has decided that the contents of this publication will remain unchanged until the stability date indicated on the IEC website under "http://webstore.iec.ch" in the data related to the specific publication. At this date, the publication will be

- reconfirmed,
- withdrawn,
- replaced by a revised edition, or
- amended.

The contents of the corrigendum of June 2017 have been included in this copy.

Documents
Document Sharing Hub

Full document details: IEC 60603-7-81 2015

INTRODUCTION

IEC 60603-7 is the base specification of the whole series. Subsequent specifications do not duplicate information given in the base document, but list only additional requirements. For complete specification regarding a component of a higher number document all lower numbered documents shall be considered as well. The following diagram shows the interrelation of the documents:

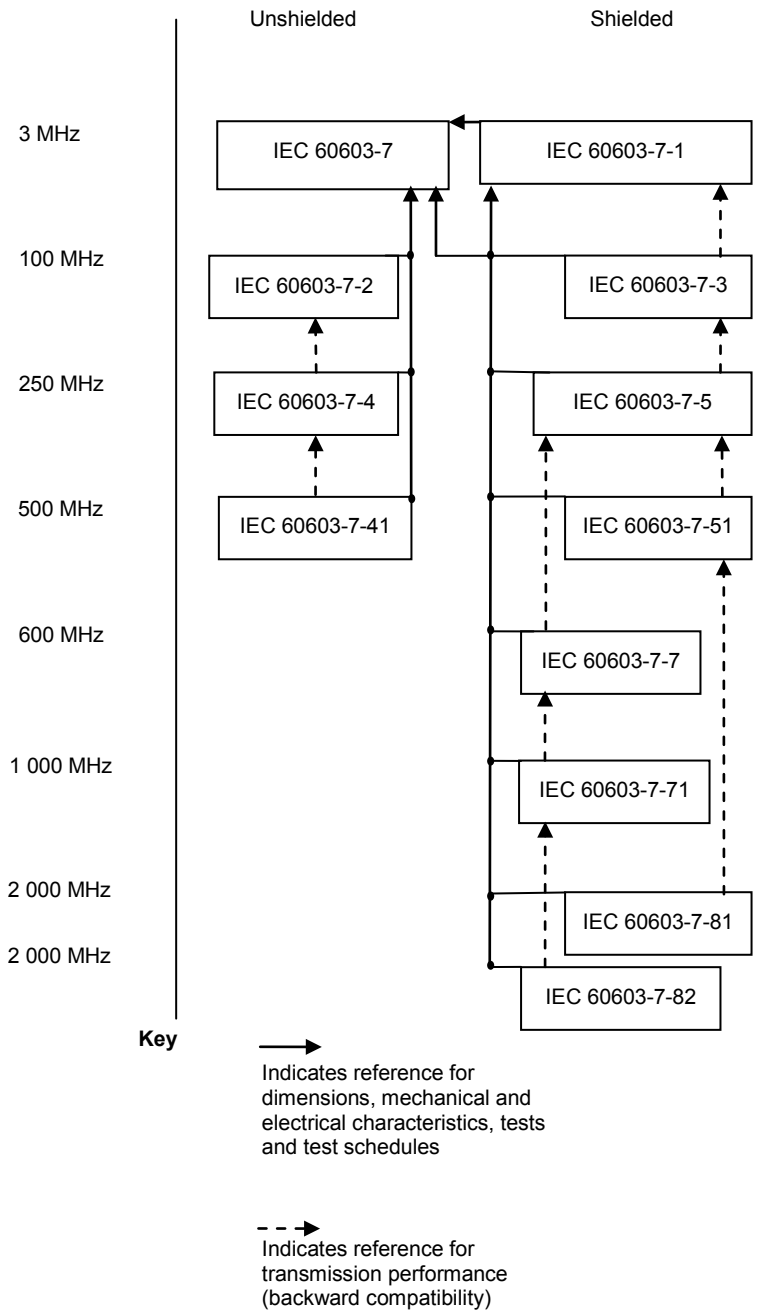

The International Electrotechnical Commission (IEC) draws attention to the fact that it is claimed that compliance with this document may involve the use of a patent concerning transmission characteristics given in 6.2.

Documents
Document Sharing Hub
Full document details: IEC 60603-7-81 2015

IEC takes no position concerning the evidence, validity and scope of this patent right.

The holder of this patent right has assured the IEC that he/she is willing to negotiate licences either free of charge or under reasonable and non-discriminatory terms and conditions with applicants throughout the world. In this respect, the statement of the holder of this patent right is registered with IEC. Information may be obtained from:

CommScope INC of North Carolina

110 CommScope Place SE

Hickory North Carolina USA 28602

Attention is drawn to the possibility that some of the elements of this document may be the subject of patent rights other than those identified above. IEC shall not be held responsible for identifying any or all such patent rights.

ISO (www.iso.org/patents) and IEC (http://patents.iec.ch) maintain on-line data bases of patents relevant to their standards. Users are encouraged to consult the data bases for the most up to date information concerning patents.

Documents
Document Sharing Hub

Full document details: IEC 60603-7-81 2015

CONNECTORS FOR ELECTRONIC EQUIPMENT –

Part 7-81: Detail specification for 8-way, shielded, free and fixed connectors, for data transmissions with frequencies up to 2 000 MHz

1 Scope

This part of IEC 60603 covers 8-way, shielded, free and fixed connectors, references dimensional, mechanical, electrical and environmental characteristics and tests in IEC 60603-7, and specifies electrical transmission requirements, including power sum alien (exogenous) crosstalk, for frequencies up to 2 000 MHz.

These connectors are typically used as “category 8.1” connectors in “class I” cabling systems specified in ISO/IEC 11801.

These connectors are intermateable and interoperable with other IEC 60603-7 series connectors as defined in Clause 2 of IEC 60603-7.

These connectors are backward compatible with other IEC 60603-7 series connectors, except IEC 60603-7-7 and IEC 60603-7-71 connectors.

NOTE Transmission performance categories: in this IEC standard, the term “category”, when used in reference to transmission performance, refers to those categories defined by ISO/IEC 11801.

2 Normative references

The following documents, in whole or in part, are normatively referenced in this document and are indispensable for its application. For dated references, only the edition cited applies. For undated references, the latest edition of the referenced document (including any amendments) applies.

IEC 60512-2-1, *Connectors for electronic equipment – Tests and measurements – Part 2-1: Electrical continuity and contact resistance tests – Test 2a: Contact resistance – Millivolt level method*

IEC 60512-25-9, *Connectors for electronic equipment – Tests and measurements – Part 25-9: Signal integrity tests – Test 25i: Alien crosstalk*

IEC 60512-26-100, *Connectors for electronic equipment – Tests and measurements – Part 26-100: Measurement setup, test and reference arrangements and measurements for connectors according to IEC 60603-7 – Tests 26a to 26g*

IEC 60512-28-100: (2nd edition under consideration) *Connectors for electronic equipment – Tests and measurements – Part 28-100: Signal integrity tests up to 2 000 MHz on IEC 60603-7 and IEC 61076-3 series connectors –Tests 28a to 28g*

IEC 60603-7:2008, *Connectors for electronic equipment – Part 7: Detail specification for 8-way, unshielded, free and fixed connectors*

IEC 60603-7-1:2011, *Connectors for electronic equipment – Part 7-1: Detail specification for 8-way, shielded, free and fixed connectors*

IEC 61156 (all parts), *Multicore and symmetrical pair/quad cables for digital communications*

AVA Documents Document Sharing Hub

Full document details: IEC 60603-7-81 2015

IEC 62153-4-15: *Metallic communication cable test methods – Part 4-15: Electromagnetic compatibility (EMC) – Test method for measuring transfer impedance and screening attenuation or coupling attenuation with triaxial cell*[1]

3 Terms and definitions

For the purposes of this document, the terms and definitions of Clause 2 of IEC 60603-7, apply as well as the following.

3.1
backward compatibility
a set of requirements ensuring that a free or fixed connector which is in compliance with this standard, mated with a fixed or free connector in compliance with any lower frequency IEC 60603-7 series connector, fully complies with the requirements of the lower frequency IEC 60603-7 series connector, except 60603-7-7 and 60603-7-71

Note 1 to entry: The complete specification of the categories and the backward compatibility system for the IEC 60603-7 series connectors, when used in standard ISO/IEC 11801-1 balanced cabling systems, is specified in referenced ISO/IEC 11801-1.

See Clause 3 of IEC 60603-7-1:2011 for dimensions, views and requirements.

4 Cable terminations and internal connections – Fixed and free connectors

See Clause 4 of IEC 60603-7-1:2011 for cable termination and internal connections types.

5 Gauge

The gauge as defined by Clause 5 of IEC 60603-7-1:2011 shall apply.

6 Characteristics

6.1 General

6.1.1 Overview

Connectors according to this standard shall meet all relevant requirements specified by IEC 60603-7-1.

6.1.2 Pin and pair grouping assignment

The pin and pair grouping assignment of Figure 9 of 6.2 of IEC 60603-7:2008 applies.

6.1.3 Classification into climatic category

Connectors according to this standard are classified in the same climatic categories as defined by IEC 60603-7.

[1] To be published.

Documents
Document Sharing Hub

Full document details: IEC 60603-7-81 2015

6.2 Electrical characteristics

6.2.1 General

Connectors according to this standard shall meet the electrical characteristics specified by IEC 60603-7-1.

In the following clauses/subclauses, f is the frequency expressed in MHz.

6.2.2 Transfer impedance

In addition to 6.2.1, the transfer impedance of connectors conforming to this standard shall meet the following requirements.

Conditions:

When tested according to IEC 60512-26-100, Test 26e, mated connectors, terminated with each cable type (e.g. F/UTP, S/FTP) intended to be used for these connectors shall not show higher magnitude of transfer impedance as given by formula:

All types: $\leq 0{,}05 f^{0{,}3}\ \Omega$ from 1 MHz to 10 MHz

$\leq 0{,}01 f\ \Omega$ from 10 MHz to 80 MHz.

6.3 Transmission characteristics

6.3.1 General

Compliance to this standard in respect to transmission characteristics, is determined according to specific test methods described in test group EP, see Table 1. The interoperability of connectors compliant to this standard shall be demonstrated by testing the fixed connectors with the full range of free connectors according to IEC 60512-28-100.

Compliance to this standard in respect to the alien (exogenous) crosstalk is determined according to specific test methods described in IEC 60512-25-9.

All transmission performance requirements apply between the reference planes specified in 2nd edition of IEC 60512-28-100.

NOTE At the date of issue of this standard, the test method was under consideration. 1st edition of IEC 60512-28-100 will be updated to 2 000 MHz as 2nd edition.

6.3.2 Insertion loss

Conditions:

IEC 60512, test 28a.

Mated connectors.

All pairs: $\leq 0{,}02\sqrt{f}$ dB, from 1 MHz to 500 MHz.

All pairs: $\leq 0{,}00649\sqrt{f} + 0{,}000605 f$ dB, from 500 MHz to 2 000 MH.

Whenever the formula results in a value less than 0,1 dB, the requirement shall revert to 0,1 dB.

6.3.3 Return loss

Conditions.

Documents
Document Sharing Hub

Full document details: IEC 60603-7-81 2015