IEC 60623

Edition 5.0 2017-01

INTERNATIONAL STANDARD

NORME INTERNATIONALE

Secondary cells and batteries containing alkaline or other non-acid electrolytes – Vented nickel-cadmium prismatic rechargeable single cells

Accumulateurs alcalins ou autres accumulateurs à électrolyte non acide – Éléments individuels parallélépipédiques rechargeables ouverts au nickel-cadmium

IEC 60623:2017-01(en-fr)

Documents
Document Sharing Hub

Full document details: IEC 60623 2017

THIS PUBLICATION IS COPYRIGHT PROTECTED

Copyright © 2017 IEC, Geneva, Switzerland

All rights reserved. Unless otherwise specified, no part of this publication may be reproduced or utilized in any form or by any means, electronic or mechanical, including photocopying and microfilm, without permission in writing from either IEC or IEC's member National Committee in the country of the requester. If you have any questions about IEC copyright or have an enquiry about obtaining additional rights to this publication, please contact the address below or your local IEC member National Committee for further information.

Droits de reproduction réservés. Sauf indication contraire, aucune partie de cette publication ne peut être reproduite ni utilisée sous quelque forme que ce soit et par aucun procédé, électronique ou mécanique, y compris la photocopie et les microfilms, sans l'accord écrit de l'IEC ou du Comité national de l'IEC du pays du demandeur. Si vous avez des questions sur le copyright de l'IEC ou si vous désirez obtenir des droits supplémentaires sur cette publication, utilisez les coordonnées ci-après ou contactez le Comité national de l'IEC de votre pays de résidence.

IEC Central Office
3, rue de Varembé
CH-1211 Geneva 20
Switzerland

Tel.: +41 22 919 02 11
Fax: +41 22 919 03 00
info@iec.ch
www.iec.ch

About the IEC
The International Electrotechnical Commission (IEC) is the leading global organization that prepares and publishes International Standards for all electrical, electronic and related technologies.

About IEC publications
The technical content of IEC publications is kept under constant review by the IEC. Please make sure that you have the latest edition, a corrigenda or an amendment might have been published.

IEC Catalogue - webstore.iec.ch/catalogue
The stand-alone application for consulting the entire bibliographical information on IEC International Standards, Technical Specifications, Technical Reports and other documents. Available for PC, Mac OS, Android Tablets and iPad.

IEC publications search - www.iec.ch/searchpub
The advanced search enables to find IEC publications by a variety of criteria (reference number, text, technical committee,…). It also gives information on projects, replaced and withdrawn publications.

IEC Just Published - webstore.iec.ch/justpublished
Stay up to date on all new IEC publications. Just Published details all new publications released. Available online and also once a month by email.

Electropedia - www.electropedia.org
The world's leading online dictionary of electronic and electrical terms containing 20 000 terms and definitions in English and French, with equivalent terms in 16 additional languages. Also known as the International Electrotechnical Vocabulary (IEV) online.

IEC Glossary - std.iec.ch/glossary
65 000 electrotechnical terminology entries in English and French extracted from the Terms and Definitions clause of IEC publications issued since 2002. Some entries have been collected from earlier publications of IEC TC 37, 77, 86 and CISPR.

IEC Customer Service Centre - webstore.iec.ch/csc
If you wish to give us your feedback on this publication or need further assistance, please contact the Customer Service Centre: csc@iec.ch.

A propos de l'IEC
La Commission Electrotechnique Internationale (IEC) est la première organisation mondiale qui élabore et publie des Normes internationales pour tout ce qui a trait à l'électricité, à l'électronique et aux technologies apparentées.

A propos des publications IEC
Le contenu technique des publications IEC est constamment revu. Veuillez vous assurer que vous possédez l'édition la plus récente, un corrigendum ou amendement peut avoir été publié.

Catalogue IEC - webstore.iec.ch/catalogue
Application autonome pour consulter tous les renseignements bibliographiques sur les Normes internationales, Spécifications techniques, Rapports techniques et autres documents de l'IEC. Disponible pour PC, Mac OS, tablettes Android et iPad.

Recherche de publications IEC - www.iec.ch/searchpub

La recherche avancée permet de trouver des publications IEC en utilisant différents critères (numéro de référence, texte, comité d'études,…). Elle donne aussi des informations sur les projets et les publications remplacées ou retirées.

IEC Just Published - webstore.iec.ch/justpublished

Restez informé sur les nouvelles publications IEC. Just Published détaille les nouvelles publications parues. Disponible en ligne et aussi une fois par mois par email.

Electropedia - www.electropedia.org

Le premier dictionnaire en ligne de termes électroniques et électriques. Il contient 20 000 termes et définitions en anglais et en français, ainsi que les termes équivalents dans 16 langues additionnelles. Egalement appelé Vocabulaire Electrotechnique International (IEV) en ligne.

Glossaire IEC - std.iec.ch/glossary
65 000 entrées terminologiques électrotechniques, en anglais et en français, extraites des articles Termes et Définitions des publications IEC parues depuis 2002. Plus certaines entrées antérieures extraites des publications des CE 37, 77, 86 et CISPR de l'IEC.

Service Clients - webstore.iec.ch/csc

Si vous désirez nous donner des commentaires sur cette publication ou si vous avez des questions contactez-nous: csc@iec.ch.

Documents
Document Sharing Hub

Full document details: IEC 60623 2017

IEC 60623

Edition 5.0 2017-01

INTERNATIONAL STANDARD

NORME INTERNATIONALE

Secondary cells and batteries containing alkaline or other non-acid electrolytes – Vented nickel-cadmium prismatic rechargeable single cells

Accumulateurs alcalins ou autres accumulateurs à électrolyte non acide – Éléments individuels parallélépipédiques rechargeables ouverts au nickel-cadmium

INTERNATIONAL
ELECTROTECHNICAL
COMMISSION

COMMISSION
ELECTROTECHNIQUE
INTERNATIONALE

ICS 29.220.99

ISBN 978-2-8322-3788-5

Warning! Make sure that you obtained this publication from an authorized distributor.
Attention! Veuillez vous assurer que vous avez obtenu cette publication via un distributeur agréé.

® Registered trademark of the International Electrotechnical Commission
Marque déposée de la Commission Electrotechnique Internationale

AVA Documents
Document Sharing Hub

Full document details: IEC 60623 2017

CONTENTS

FOREWORD 4
1 Scope 6
2 Normative references 6
3 Terms and definitions 6
4 Parameter measurement tolerances 7
5 Designation and marking 7
5.1 Cell designation (mandatory) 7
5.2 Cell designation (optional) 8
5.3 Cell termination 8
5.4 Marking 8
5.5 Safety recommendations 8
6 Dimensions 9
7 Electrical tests 10
7.1 General 10
7.2 Charging procedure for test purposes 10
7.2.1 General 10
7.2.2 Charge procedure based on constant current 11
7.2.3 Charge procedure based on constant voltage at a given current 11
7.2.4 Rapid charge current 11
7.3 Discharge performances 11
7.3.1 General 11
7.3.2 Discharge performance at 20 °C 11
7.3.3 Discharge performance at +5 °C 12
7.3.4 Discharge performance at –18 °C 13
7.3.5 Discharge performance at low temperature 13
7.3.6 Discharge performance at high temperature 14
7.3.7 High rate current test 15
7.4 Charge retention 16
7.5 Endurance 16
7.5.1 Test conditions 16
7.5.2 Endurance in cycles 16
7.6 Charge acceptance at constant voltage 17
7.7 Vent plug operation 18
7.8 Electrolyte retention test 18
7.8.1 General 18
7.8.2 Test procedure 18
7.8.3 Acceptance criteria 18
7.9 Storage 18
8 Mechanical tests 18
9 Physical appearance 18
10 Conditions for approval and acceptance 19
10.1 Type approval 19
10.2 Batch acceptance 19
Annex A (normative) CCCV charge methodology 21
Bibliography 24

AVA Documents
Document Sharing Hub

Full document details: IEC 60623 2017

Figure 1 – Example of a vented prismatic cell in steel container with two terminals and four lugs 9
Figure A.1 – Overview of charging characteristic of Ni-Cd 22

Table 1 – Dimensions for vented nickel-cadmium prismatic cells in steel containers 9
Table 2 – Dimensions for vented nickel-cadmium prismatic cells in plastic containers 10
Table 3 – Measurement tolerances in millimetres (valid for widths and lengths) 10
Table 4 – Maximum values for rapid charge current R 11
Table 5 – Discharge performance at 20 °C 12
Table 6 – Discharge performance at +5 °C 12
Table 7 – Discharge performance at –18 °C 13
Table 8 – Discharge performance at low temperature 14
Table 9 – Discharge performance at high temperature 15
Table 10 – High currents values 15
Table 11 – Endurance in cycles 16
Table 12 – Constant voltage charging conditions 17
Table 13 – Charge time 17
Table 14 – Sequence of tests for type approval 19
Table 15 – Recommended test sequence for batch acceptance 20
Table A.1 – Ni-Cd batteries charging characteristics 22

Documents
Document Sharing Hub

Full document details: IEC 60623 2017

INTERNATIONAL ELECTROTECHNICAL COMMISSION

SECONDARY CELLS AND BATTERIES CONTAINING ALKALINE OR OTHER NON-ACID ELECTROLYTES – VENTED NICKEL-CADMIUM PRISMATIC RECHARGEABLE SINGLE CELLS

FOREWORD

1) The International Electrotechnical Commission (IEC) is a worldwide organization for standardization comprising all national electrotechnical committees (IEC National Committees). The object of IEC is to promote international co-operation on all questions concerning standardization in the electrical and electronic fields. To this end and in addition to other activities, IEC publishes International Standards, Technical Specifications, Technical Reports, Publicly Available Specifications (PAS) and Guides (hereafter referred to as "IEC Publication(s)"). Their preparation is entrusted to technical committees; any IEC National Committee interested in the subject dealt with may participate in this preparatory work. International, governmental and non-governmental organizations liaising with the IEC also participate in this preparation. IEC collaborates closely with the International Organization for Standardization (ISO) in accordance with conditions determined by agreement between the two organizations.
2) The formal decisions or agreements of IEC on technical matters express, as nearly as possible, an international consensus of opinion on the relevant subjects since each technical committee has representation from all interested IEC National Committees.
3) IEC Publications have the form of recommendations for international use and are accepted by IEC National Committees in that sense. While all reasonable efforts are made to ensure that the technical content of IEC Publications is accurate, IEC cannot be held responsible for the way in which they are used or for any misinterpretation by any end user.
4) In order to promote international uniformity, IEC National Committees undertake to apply IEC Publications transparently to the maximum extent possible in their national and regional publications. Any divergence between any IEC Publication and the corresponding national or regional publication shall be clearly indicated in the latter.
5) IEC itself does not provide any attestation of conformity. Independent certification bodies provide conformity assessment services and, in some areas, access to IEC marks of conformity. IEC is not responsible for any services carried out by independent certification bodies.
6) All users should ensure that they have the latest edition of this publication.
7) No liability shall attach to IEC or its directors, employees, servants or agents including individual experts and members of its technical committees and IEC National Committees for any personal injury, property damage or other damage of any nature whatsoever, whether direct or indirect, or for costs (including legal fees) and expenses arising out of the publication, use of, or reliance upon, this IEC Publication or any other IEC Publications.
8) Attention is drawn to the Normative references cited in this publication. Use of the referenced publications is indispensable for the correct application of this publication.
9) Attention is drawn to the possibility that some of the elements of this IEC Publication may be the subject of patent rights. IEC shall not be held responsible for identifying any or all such patent rights.

International Standard IEC 60623 has been prepared by subcommittee 21A: Secondary cells and batteries containing alkaline or other non-acid electrolytes, of IEC technical committee 21: Secondary cells and batteries.

This fifth edition cancels and replaces the fourth edition published in 2001 and constitutes a technical revision.

This edition includes the following significant technical changes with respect to the previous edition:

– optional characterization of cells designed for performances at very low and/or very high temperature;
– optional characterization of cells tested with CCCV charge;
– optional characterization of cells designed for rapid charge;
– optional characterization of cells designed for high cycling.

Documents
Document Sharing Hub

Full document details: IEC 60623 2017

The text of this standard is based on the following documents:

FDIS	Report on voting
21A/610/FDIS	21A/621/RVD

Full information on the voting for the approval of this standard can be found in the report on voting indicated in the above table.

This publication has been drafted in accordance with the ISO/IEC Directives, Part 2.

The committee has decided that the contents of this publication will remain unchanged until the stability date indicated on the IEC website under "http://webstore.iec.ch" in the data related to the specific publication. At this date, the publication will be

- reconfirmed,
- withdrawn,
- replaced by a revised edition, or
- amended.

Documents
Document Sharing Hub

Full document details: IEC 60623 2017

SECONDARY CELLS AND BATTERIES CONTAINING ALKALINE OR OTHER NON-ACID ELECTROLYTES – VENTED NICKEL-CADMIUM PRISMATIC RECHARGEABLE SINGLE CELLS

1 Scope

IEC 60623 specifies marking, designation, dimensions, tests and requirements for vented nickel-cadmium prismatic secondary single cells.

NOTE In this context, "prismatic" refers to cells having rectangular sides and base.

When there exists an IEC standard specifying test conditions and requirements for cells used in special applications and which is in conflict with this document, the former takes precedence.

2 Normative references

The following documents are referred to in the text in such a way that some or all of their content constitutes requirements of this document. For dated references, only the edition cited applies. For undated references, the latest edition of the referenced document (including any amendments) applies.

IEC 60050-482:2004, *International Electrotechnical Vocabulary – Part 482: Primary and secondary cells and batteries*

IEC 60417, *Graphical symbols for use on equipment* (available from: *http://www.graphical-symbols.info/equipment*)

3 Terms and definitions

For the purposes of this document, the terms and definitions given in IEC 60050-482 and the following apply.

ISO and IEC maintain terminological databases for use in standardization at the following addresses:

- IEC Electropedia: available at http://www.electropedia.org/
- ISO Online browsing platform: available at http://www.iso.org/obp

3.1
vented cell
secondary cell having a cover provided with an opening through which products of electrolysis and evaporation are allowed to escape freely from the cell to the atmosphere

Note 1 to entry: The opening may be fitted with a venting system.

3.2
nominal voltage
suitable approximate value of the voltage used to designate or identify a cell or a battery

Note 1 to entry: The nominal voltage of a vented nickel-cadmium rechargeable single cell is 1,2 V.

Note 2 to entry: The nominal voltage of a battery of n series connected cells is equal to n times the nominal voltage of a single cell.

AVA Documents
Document Sharing Hub

Full document details: IEC 60623 2017

[SOURCE: IEC 60050-482:2004, 482-03-31, modified – Replacement of the words "a battery or an electrochemincal system" by" "or a battery" and addition of Notes 1 and 2 to entry.]

3.3
discharge voltage
closed circuit voltage
DEPRECATED: on load voltage
<cell or battery> voltage between the terminals of a cell or battery when being discharged

[SOURCE: IEC 60050-482:2004, 482-03-28]

3.4
rated capacity
capacity value of a cell or battery determined under specified conditions and declared by the manufacturer

Note 1 to entry: The rated capacity is the quantity of electricity C_5 Ah (ampere-hours) declared by the manufacturer which a single cell can deliver during a 5 h period when charging, storing and discharging under the conditions specified in 7.3.2.

[SOURCE: IEC 60050-482:2004, 482-03-15, modified – Addition of the words "a cell or" in the definition, and of Note 1 to entry.]

3.5
CCCV charge
method of charge consisting in a charge at **C**onstant **C**urrent followed by a charge at **C**onstant **V**oltage

4 Parameter measurement tolerances

The overall accuracy of controlled or measured values, relative to the specified or actual values, shall be within these tolerances:

a) ±1 % for voltage;

b) ±1 % for current;

c) ±2 °C for temperature;

d) ±0,1 % for time;

e) ±1 % for capacity.

These tolerances comprise the combined accuracy of the measuring instruments, the measurement techniques used, and all other sources of error in the test procedure.

The details of the instrumentation used shall be provided in any report of results.

5 Designation and marking

5.1 Cell designation (mandatory)

Vented nickel-cadmium prismatic secondary single cells shall be designated by the letter "K" followed by a letter L, M, H or X which signifies:

– low rate of discharge (L);
– medium rate of discharge (M);
– high rate of discharge (H);
– very high rate of discharge (X).

AVA Documents
Document Sharing Hub
Full document details: IEC 60623 2017

NOTE 1 These types of cells are typically but not exclusively used for the following discharge rates:

– L up to 0,5 I_t A;

– M up to 3,5 I_t A;

– H up to 7,0 I_t A;

– X up to and above 7,0 I_t A.

NOTE 2 These currents are expressed as multiples of I_t A, where I_t A = C_5 Ah/1 h (see IEC 61434).

This group of two letters shall be followed by a group of figures indicative of the rated capacity of the cell in ampere-hours. Cells that have been tested at 20 °C and 5 °C but not at –18 °C shall carry an additional marking of T5: for example: KH 185 or KH 185 T5.

Cells in cases of plastic material shall be designated by the letter "P" after the figures: for example: KH 185 P.

5.2 Cell designation (optional)

The additional marking shall be added to the mandatory marking. When the marking would exceed the available space on the cell, this information may be omitted on the cell but shall be provided in the documentation corresponding to the cell and in the type test report.

If there is no mention concerning the marking for temperature, the cells shall have been tested at: –18 °C, 5 °C and 20 °C. Cells tested at other temperatures shall carry an additional marking of T followed by tested temperatures. In case the cell is characterized with both low and high temperature, they shall be indicated in increasing order with a solidus separating them: for example: KH 185 P T-35/+45.

Cells tested with CCCV charges shall carry the marking of CCCV: for example, KH 185 P CCCV.

Cells tested at rapid charge shall carry the marking R and the value of the tested rapid charge current, expressed in multiple of I_t A: for example, KH 185 P R1.

High grade cycling cells shall carry an additional marking C followed by the number of cycles: for example, KH 185 P C1500.

Cells having been tested with multiple types of tests shall carry the marking for the various tests performed: for example KH 185 P T-35/+45 CCCV R1 C1500.

5.3 Cell termination

This document does not specify cell termination.

5.4 Marking

Each cell or monobloc shall carry durable markings giving the following minimum information:

- type of cell (designation as specified in 5.1 and 5.2; in addition, it is permissible for a manufacturer to use his own type designation);
- name or identification of manufacturer or supplier;
- positive terminal: either a red washer or an indented or raised symbol (see graphical symbol IEC 60417-5005:2002-10).

5.5 Safety recommendations

The manufacturer shall provide recommendations for the safe handling of the cell. See also IEC TR 61438.

AVA Documents
Document Sharing Hub

Full document details: IEC 60623 2017

6 Dimensions

Dimensions of cells, shown in Figure 1, are given in Tables 1 and 2.

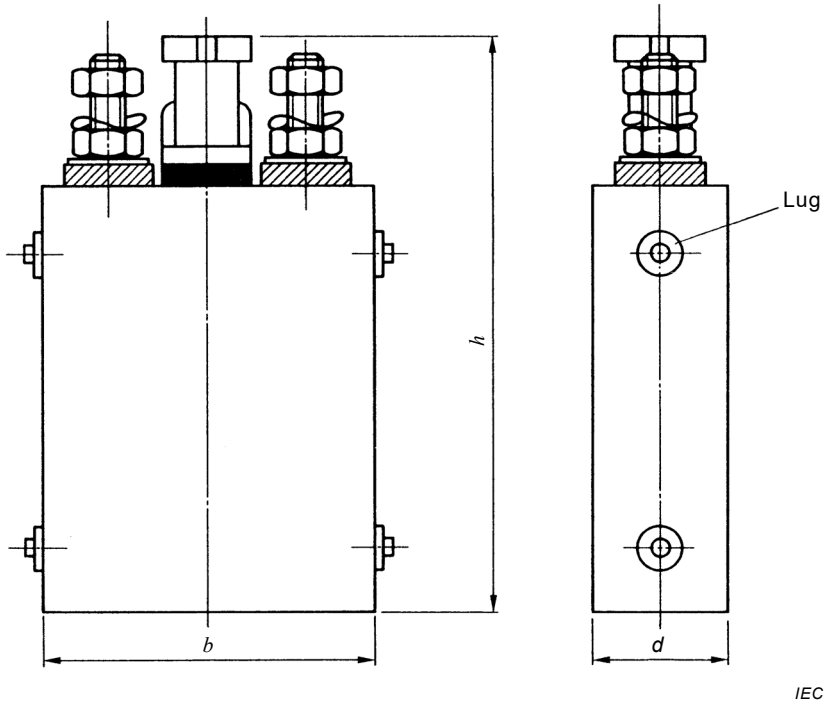

NOTE 1 Cells in steel container can have two or more terminals and four or more lugs.

NOTE 2 Cells in plastic container can have two or more terminals and no lugs.

Figure 1 – Example of a vented prismatic cell in steel container with two terminals and four lugs

Table 1 – Dimensions for vented nickel-cadmium prismatic cells in steel containers

Width, ***b*** mm	**Maximum height**, ***h*** mm	**Lengths**, ***d*** mm
81	291	83
105	350	91, 130
131	409	36, 50, 56, 66, 78, 94
148	409	52, 76, 100
157	409	66, 84, 95, 116, 134, 143, 147, 166, 200, 225, 242, 410
188	409	128

Documents
Document Sharing Hub
Full document details: IEC 60623 2017

Table 2 – Dimensions for vented nickel-cadmium prismatic cells in plastic containers

Width, b mm	**Maximum height**, h mm	**Lengths**, d mm
62	178	28
78	285	50
81	241	28, 36, 43, 48
87	273	47, 86
123	273	28, 40, 50, 61
138	406	48, 55, 61, 70, 77, 85, 105, 115, 265
147	285	53, 78, 102
165	406	42, 66, 75, 105, 110, 130, 160
173	375	122, 197, 287, 392, 517
195	406	29, 34, 40, 50, 64, 80, 94, 115

NOTE 1 The dimensions given in Tables 1 and 2 represent preferred values. For cells with deviating size, dimensions as per Figure 1 are indicated.

NOTE 2 The widths relate to the overall width dimension of the cell excluding the thickness of the lug flanges. The values for widths and lengths given in Tables 1 and 2 are maximum values; their negative tolerances are given in Table 3.

NOTE 3 The values for height given in Tables 1 and 2 relate to the maximum height over the terminals or the closed cell vent, whichever is the greater. No lower limits are stated.

NOTE 4 The dimensions shown in Tables 1 and 2 are not associated to particular cell capacities. They apply to all kinds of vented nickel-cadmium prismatic cells, i.e. L, M, H and X types.

Table 3 – Measurement tolerances in millimetres (valid for widths and lengths)

Up to and including 60 mm	0 to –2
Above 60 mm, up to and including 120 mm	0 to –3
Above 120 mm	0 to –4

7 Electrical tests

7.1 General

Charge and discharge currents for the tests in accordance with 7.1 to 7.9 inclusive shall be based on the value of the rated capacity (C_5 Ah). These currents are expressed as multiples of I_t A, where I_t A = C_5 Ah/1 h.

7.2 Charging procedure for test purposes

7.2.1 General

Prior to charging, the cells shall have been discharged at 20 °C ± 5 °C, at a constant current of 0,2 I_t A, down to a final voltage of 1,0 V.

Two charging methods are possible, to be selected by the cell manufacturers, in order to define their cells characteristics:

– charge based on constant current;

Documents
Document Sharing Hub
Full document details: IEC 60623 2017

– charge based on constant voltage, with a value of possible charging current (CCCV).

7.2.2 Charge procedure based on constant current

Unless otherwise specified in this standard, the charge preceding the various discharge tests scheduled, shall be carried out in an ambient temperature of 20 °C ± 5 °C and at a constant current of 0,2 I_t A. The duration of the charge shall be 7 h to 8 h.

7.2.3 Charge procedure based on constant voltage at a given current

This charge method is based on a constant current followed by constant voltage procedure (CCCV). The choice for the charge methodology for performance determination shall be defined before the start of the tests, and kept throughout all the testing procedures where indicated.

For such charging methodology, two parameters are adjustable: current and voltage. They shall be clearly identified by the cell manufacturer in the description of the cell characteristics, as well as in the cell marking: for example KH 185 P CCCV R1.

The charging methodology CCCV is described in Annex A.

7.2.4 Rapid charge current

The charging current value for performance determination shall be selected before the start of the tests, and kept throughout all the tests where indicated.

The design charge current value shall be indicated in the manufacturer's documentation attached to the cell (e.g. 0,5 I_t A or 1 I_t A) which will be referred to as R in this standard, as well as in the approval documentation. This current is a maximum value. Table 4 shows preferred values for the rapid charge current:

Table 4 – Maximum values for rapid charge current R

Charge current for CCCV	0,5 I_t A	1,0 I_t A	2,0 I_t A	3,0 I_t A

In case no rapid charge current is defined, it shall be taken at 0,2 I_t A. Otherwise, the rapid charge current rate selected shall be clearly indicated in the report of test.

7.3 Discharge performances

7.3.1 General

The following discharge tests shall be carried out in the sequence given.

All cells shall be tested at 20 °C as well as at +5 °C and/or –18 °C.

7.3.2 Discharge performance at 20 °C

7.3.2.1 Test method

The cell shall have been charged in accordance with 7.2.2. After charging, the cell shall be stored, in an ambient temperature of 20 °C ± 5 °C, for not less than 1 h and not more than 4 h.

It shall then be discharged in the same ambient temperature and as specified in Table 5.

Documents
Document Sharing Hub
Full document details: IEC 60623 2017

7.3.2.2 Acceptance criteria

The duration of discharge shall be not less than the minimum specified in Table 5.

The 0,2 I_t A discharge test is performed in order to verify the declared rated capacity of the cell.

Table 5 – Discharge performance at 20 °C

Discharge conditions		Minimum discharge duration			
Rate of constant current	Final voltage	Cell designation			
A	V	L	M	H	X
0,2 I_t [a]	1,0	5 h	5 h	5 h	5 h
1,0 I_t	1,0	–	40 min	50 min	55 min
5,0 I_t [b]	0,8	–	–	4 min	7 min
10,0 I_t [b]	0,8	–	–	–	2 min

[a] Five cycles are permitted for this test which shall, however, be terminated at the end of the first cycle which meets the requirement.

[b] Before the 5 I_t A and the 10 I_t A discharge tests, a conditioning cycle may be included if necessary. This cycle shall consist of charging and discharging at 0,2 I_t A in accordance with 7.2.1 and 7.2.2.

7.3.3 Discharge performance at +5 °C

7.3.3.1 Test method

The cell shall have been charged in accordance with 7.2.2. After charging, the cell shall be stored, in an ambient temperature of +5 °C ± 2 °C, for 24 h. Means shall be provided to ensure that the electrolyte temperature has reached +5 °C ± 2 °C within 24 h.

It shall then be discharged in the same ambient temperature and as specified in Table 6.

7.3.3.2 Acceptance criteria

The duration of discharge shall be not less than the minimum specified in Table 6.

Table 6 – Discharge performance at +5 °C

Discharge conditions		Minimum discharge duration			
Rate of constant current	Final voltage	Cell designation			
A	V	L	M	H	X
0,2 I_t	1,0	4 h 15 min	4 h 25 min	4 h 35 min	4 h 45 min
1,0 I_t	1,0	–	31 min	43 min	52 min
2,0 I_t [a]	1,0	–	–	12 min	22 min
5,0 I_t [a]	0,8	–	–	–	5 min 30 s

[a] Before the 2 I_t A and 5 I_t A tests, a conditioning cycle may be included if necessary. This cycle shall consist of charging and discharging at 0,2 I_t A, in an ambient temperature of 20 °C ± 5 °C, according to 7.2.1and 7.2.2.

AVA Documents Document Sharing Hub

Full document details: IEC 60623 2017

7.3.4 Discharge performance at –18 °C

7.3.4.1 Test method

The cell shall have been charged in accordance with 7.2.2. After charging, the cell shall be stored in an ambient temperature of –18 °C ± 2 °C, for 24 h. Means shall be provided to ensure that the electrolyte temperature has reached –18 °C ± 2 °C within 24 h.

It shall then be discharged in the same ambient temperature and as specified in Table 7.

7.3.4.2 Acceptance criteria

The duration of discharge shall be not less than the minimum specified in Table 7.

Table 7 – Discharge performance at –18 °C

Discharge conditions		Minimum discharge duration			
Rate of constant current	Final voltage	Cell designation			
A	V	L	M	H	X
0,2 I_t	1,0	2 h 30 min	3 h	3 h 30 min	4 h
1,0 I_t	0,9	–	15 min	25 min	35 min
2,0 I_t [a]	0,9	–	–	7 min 30 s	12 min
5,0 I_t [a]	0,8	–	–	–	3 min 30 s

[a] Before the 2 I_t A and 5 I_t A discharge tests, a conditioning cycle may be included if necessary. This cycle shall consist of charging and discharging at 0,2 I_t A, in an ambient temperature of 20 °C ± 5 °C, according to 7.2.1 and 7.2.2.

7.3.5 Discharge performance at low temperature

7.3.5.1 General

This test is optional. This test is performed in order to identify the rated low temperature T_L and the level of performance of the cell at this temperature.

7.3.5.2 Test method

The temperature should be expressed at 5 °C intervals, such as –25 °C, –30 °C, –35 °C, –40 °C, referred to as T_L in the following. The test shall be done at the targeted low temperature T_L (no need for intermediate temperatures) to verify the discharge performance as specified in Table 8.

Documents
Document Sharing Hub
Full document details: IEC 60623 2017

Table 8 – Discharge performance at low temperature

Discharge conditions		Minimum discharge duration			
Rate of constant current	Final voltage	Cell designation			
A	V	L	M	H	X
0,2 I_t	1	2 h 30 min	3 h	3 h	3 h
1,0 I_t	0,9	–	15 min	20 min	30 min
2,0 I_t	0,9	–	–	5 min	10 min
[a] Before the 1 I_t A and 2 I_t *A* discharge tests, a conditioning cycle may be included if necessary. This cycle shall consist of charging and discharging at 0,2 I_t *A*, in an ambient temperature of 20 °C ± 5 °C, according to 7.2.1 and 7.2.2.					

Capacity shall be measured in accordance with the following steps.

Step 1 The cell shall be fully charged using the method in accordance with 7.2.2, 7.2.3 or 7.2.4 at 20 °C (whatever constant current or constant current followed by constant voltage).

Step 2 The cell shall be stored at an ambient temperature T_L for not less than 16 h and not more than 24 h

Step 3 The cell shall then be discharged at T_L and as specified in Table 8 to the corresponding final voltage.

7.3.5.3 Acceptance criteria

The capacity (Ah), delivered during step 3 shall be not less than specified for this characteristic at any discharge current. Then the cell low temperature discharge performance shall be declared as the T_L grade.

7.3.6 Discharge performance at high temperature

7.3.6.1 General

This test is optional. This test applies to cell designed for permanent operation at a temperature higher than +30 °C. This test is performed in order to identify the rated high temperature T_H, and the level of performance of the cell at this temperature.

7.3.6.2 Test method

The temperature should be expressed at 5 °C intervals, such as +30 °C, +35 °C, +40 °C, referred to as T_H in the following. The test shall be done at the targeted high temperature T_H (no need for intermediate temperatures) to verify the discharge performance as specified in Table 9.

Documents
Document Sharing Hub
Full document details: IEC 60623 2017