IEC 60675-2

Edition 1.0 2020-12

INTERNATIONAL STANDARD

NORME INTERNATIONALE

colour inside

Household electric direct-acting room heaters – Methods for measuring performance – Part 2: Additional provisions for the measurement of the radiant factor

Appareils électrodomestiques de chauffage des locaux à action directe – Méthodes de mesure de l'aptitude à la fonction – Partie 2: Dispositions supplémentaires pour la mesure du coefficient de rayonnement

IEC 60675-2:2020-12(en-fr)

Documents
Document Sharing Hub

Full document details: IEC 60675-2-2020

THIS PUBLICATION IS COPYRIGHT PROTECTED
Copyright © 2020 IEC, Geneva, Switzerland

All rights reserved. Unless otherwise specified, no part of this publication may be reproduced or utilized in any form or by any means, electronic or mechanical, including photocopying and microfilm, without permission in writing from either IEC or IEC's member National Committee in the country of the requester. If you have any questions about IEC copyright or have an enquiry about obtaining additional rights to this publication, please contact the address below or your local IEC member National Committee for further information.

Droits de reproduction réservés. Sauf indication contraire, aucune partie de cette publication ne peut être reproduite ni utilisée sous quelque forme que ce soit et par aucun procédé, électronique ou mécanique, y compris la photocopie et les microfilms, sans l'accord écrit de l'IEC ou du Comité national de l'IEC du pays du demandeur. Si vous avez des questions sur le copyright de l'IEC ou si vous désirez obtenir des droits supplémentaires sur cette publication, utilisez les coordonnées ci-après ou contactez le Comité national de l'IEC de votre pays de résidence.

IEC Central Office
3, rue de Varembé
CH-1211 Geneva 20
Switzerland

Tel.: +41 22 919 02 11
info@iec.ch
www.iec.ch

About the IEC
The International Electrotechnical Commission (IEC) is the leading global organization that prepares and publishes International Standards for all electrical, electronic and related technologies.

About IEC publications
The technical content of IEC publications is kept under constant review by the IEC. Please make sure that you have the latest edition, a corrigendum or an amendment might have been published.

IEC publications search - webstore.iec.ch/advsearchform
The advanced search enables to find IEC publications by a variety of criteria (reference number, text, technical committee,…). It also gives information on projects, replaced and withdrawn publications.

IEC Just Published - webstore.iec.ch/justpublished
Stay up to date on all new IEC publications. Just Published details all new publications released. Available online and once a month by email.

IEC Customer Service Centre - webstore.iec.ch/csc
If you wish to give us your feedback on this publication or need further assistance, please contact the Customer Service Centre: sales@iec.ch.

Electropedia - www.electropedia.org
The world's leading online dictionary on electrotechnology, containing more than 22 000 terminological entries in English and French, with equivalent terms in 16 additional languages. Also known as the International Electrotechnical Vocabulary (IEV) online.

IEC Glossary - std.iec.ch/glossary
67 000 electrotechnical terminology entries in English and French extracted from the Terms and Definitions clause of IEC publications issued since 2002. Some entries have been collected from earlier publications of IEC TC 37, 77, 86 and CISPR.

A propos de l'IEC
La Commission Electrotechnique Internationale (IEC) est la première organisation mondiale qui élabore et publie des Normes internationales pour tout ce qui a trait à l'électricité, à l'électronique et aux technologies apparentées.

A propos des publications IEC
Le contenu technique des publications IEC est constamment revu. Veuillez vous assurer que vous possédez l'édition la plus récente, un corrigendum ou amendement peut avoir été publié.

Recherche de publications IEC - webstore.iec.ch/advsearchform
La recherche avancée permet de trouver des publications IEC en utilisant différents critères (numéro de référence, texte, comité d'études,…). Elle donne aussi des informations sur les projets et les publications remplacées ou retirées.

IEC Just Published - webstore.iec.ch/justpublished
Restez informé sur les nouvelles publications IEC. Just Published détaille les nouvelles publications parues. Disponible en ligne et une fois par mois par email.

Service Clients - webstore.iec.ch/csc
Si vous désirez nous donner des commentaires sur cette publication ou si vous avez des questions contactez-nous: sales@iec.ch.

Electropedia - www.electropedia.org
Le premier dictionnaire d'électrotechnologie en ligne au monde, avec plus de 22 000 articles terminologiques en anglais et en français, ainsi que les termes équivalents dans 16 langues additionnelles. Egalement appelé Vocabulaire Electrotechnique International (IEV) en ligne.

Glossaire IEC - std.iec.ch/glossary
67 000 entrées terminologiques électrotechniques, en anglais et en français, extraites des articles Termes et Définitions des publications IEC parues depuis 2002. Plus certaines entrées antérieures extraites des publications des CE 37, 77, 86 et CISPR de l'IEC.

Documents
Document Sharing Hub

Full document details: IEC 60675-2-2020

IEC 60675-2

Edition 1.0 2020-12

INTERNATIONAL STANDARD

NORME INTERNATIONALE

colour inside

Household electric direct-acting room heaters – Methods for measuring performance –
Part 2: Additional provisions for the measurement of the radiant factor

Appareils électrodomestiques de chauffage des locaux à action directe – Méthodes de mesure de l'aptitude à la fonction –
Partie 2: Dispositions supplémentaires pour la mesure du coefficient de rayonnement

INTERNATIONAL
ELECTROTECHNICAL
COMMISSION

COMMISSION
ELECTROTECHNIQUE
INTERNATIONALE

ICS 97.100.10

ISBN 978-2-8322-9087-3

Warning! Make sure that you obtained this publication from an authorized distributor.
Attention! Veuillez vous assurer que vous avez obtenu cette publication via un distributeur agréé.

AVA Documents
Document Sharing Hub

® Registered trademark of the International Electrotechnical Commission
Marque déposée de la Commission Electrotechnique Internationale

Full document details: IEC 60675-2-2020

CONTENTS

FOREWORD ... 3
1 Scope ... 5
2 Normative references ... 5
3 Terms, definitions and symbols ... 5
4 Classification ... 8
5 List of measurements ... 8
6 General conditions for measurements ... 8
7 Dimensions, mass and means of connection to the supply ... 8
8 Temperature rises of air-outlet grilles and external surfaces ... 8
9 Temperature rises of surfaces surrounding the heater ... 8
10 Warming-up time of the heater ... 8
11 Stability of room temperature ... 8
12 Set-back ... 9
13 Frost protection temperature ... 9
14 Inrush current ... 9
15 Effect of radiant heat ... 9
15.1 Determination of radiant factor ... 9
15.2 Determination of radiation efficiency ... 9
16 Measurement of the usable power ... 9
17 Verification of the maximum room temperature promoted by the manufacturer ... 9
Annex A (normative) Climatic test room ... 10
Annex B (informative) Information provided at point-of-sale ... 11
Annex C (informative) Test report form ... 12
Annex AA (normative) Determination of radiant factor ... 13
AA.1 General ... 13
AA.2 Test methods ... 13
AA.2.1 General ... 13
AA.2.2 Radiant factor ... 13
AA.3 Measurement equipment ... 15
AA.3.1 Principal radiometer design features ... 15
AA.3.2 Radiometer technical design ... 16
AA.3.3 Pyro-electric detector ... 17
AA.4 Radiometer calibration ... 17
AA.4.1 Calibration process ... 17
AA.4.2 Worked example ... 18

Figure 101 – Radiation reference plane ... 6
Figure 102 – Measuring grid ... 7
Figure AA.1 – Radiometer design features ... 16
Figure AA.2 – Determination of the correlation factor for a luminous radiant heater ... 18

Table AA.1 – Tube heater calibration ... 18

Documents
Document Sharing Hub

Full document details: IEC 60675-2-2020

INTERNATIONAL ELECTROTECHNICAL COMMISSION

HOUSEHOLD ELECTRIC DIRECT-ACTING ROOM HEATERS – METHODS FOR MEASURING PERFORMANCE –

Part 2: Additional provisions for the measurement of the radiant factor

FOREWORD

1) The International Electrotechnical Commission (IEC) is a worldwide organization for standardization comprising all national electrotechnical committees (IEC National Committees). The object of IEC is to promote international co-operation on all questions concerning standardization in the electrical and electronic fields. To this end and in addition to other activities, IEC publishes International Standards, Technical Specifications, Technical Reports, Publicly Available Specifications (PAS) and Guides (hereafter referred to as "IEC Publication(s)"). Their preparation is entrusted to technical committees; any IEC National Committee interested in the subject dealt with may participate in this preparatory work. International, governmental and non-governmental organizations liaising with the IEC also participate in this preparation. IEC collaborates closely with the International Organization for Standardization (ISO) in accordance with conditions determined by agreement between the two organizations.
2) The formal decisions or agreements of IEC on technical matters express, as nearly as possible, an international consensus of opinion on the relevant subjects since each technical committee has representation from all interested IEC National Committees.
3) IEC Publications have the form of recommendations for international use and are accepted by IEC National Committees in that sense. While all reasonable efforts are made to ensure that the technical content of IEC Publications is accurate, IEC cannot be held responsible for the way in which they are used or for any misinterpretation by any end user.
4) In order to promote international uniformity, IEC National Committees undertake to apply IEC Publications transparently to the maximum extent possible in their national and regional publications. Any divergence between any IEC Publication and the corresponding national or regional publication shall be clearly indicated in the latter.
5) IEC itself does not provide any attestation of conformity. Independent certification bodies provide conformity assessment services and, in some areas, access to IEC marks of conformity. IEC is not responsible for any services carried out by independent certification bodies.
6) All users should ensure that they have the latest edition of this publication.
7) No liability shall attach to IEC or its directors, employees, servants or agents including individual experts and members of its technical committees and IEC National Committees for any personal injury, property damage or other damage of any nature whatsoever, whether direct or indirect, or for costs (including legal fees) and expenses arising out of the publication, use of, or reliance upon, this IEC Publication or any other IEC Publications.
8) Attention is drawn to the Normative references cited in this publication. Use of the referenced publications is indispensable for the correct application of this publication.
9) Attention is drawn to the possibility that some of the elements of this IEC Publication may be the subject of patent rights. IEC shall not be held responsible for identifying any or all such patent rights.

International Standard IEC 60675-2 has been prepared by subcommittee 59C: Electrical heating appliances for household and similar purposes, of IEC technical committee 59: Performance of household and similar electrical appliances.

The text of this International Standard is based on the following documents:

FDIS	Report on voting
59C/256/FDIS	59C/260/RVD

Full information on the voting for the approval of this International Standard can be found in the report on voting indicated in the above table.

This document has been drafted in accordance with the ISO/IEC Directives, Part 2.

Documents
Document Sharing Hub

Full document details: IEC 60675-2-2020

This International Standard is to be used in conjunction with IEC 60675:1994, IEC 60675:1994/AMD1:1998 and IEC 60675:1994/AMD2:2018. This document supplements or modifies the corresponding clauses of IEC 60675:1994. Where the text indicates an "addition" to or a "replacement" of the relevant provision of IEC 60675:1994, these changes are made to the relevant text of IEC 60675:1994. Where no change is necessary, the words "This clause of IEC 60675:1994 is applicable" are used. When a particular subclause of IEC 60675:1994 is not mentioned in this part, that subclause applies as far as is reasonable.

Additional specific provisions to those in Part 1, given as individual clauses or subclauses, are numbered starting from 101.

NOTE The following numbering system is used:

- subclauses, tables and figures that are numbered starting from 101 are additional to those in Part 1;
- unless notes are in a new subclause or involve notes in Part 1, they are numbered starting from 101, including those in a replaced clause or subclause;
- additional annexes are lettered AA, BB, etc.

In this document, the following print types are used:

– **terms listed in Clause 3 of this document and of IEC 60675:1994 and IEC 60675-3:2020: Arial bold;**

– *test specifications: in italic type*.

A list of all parts in the IEC 60675 series, published under the general title *Household electric direct-acting room heaters – Methods for measuring performance*, can be found on the IEC website.

The committee has decided that the contents of this document will remain unchanged until the stability date indicated on the IEC website under "http://webstore.iec.ch" in the data related to the specific document. At this date, the document will be

- reconfirmed,
- withdrawn,
- replaced by a revised edition, or
- amended.

IMPORTANT – The 'colour inside' logo on the cover page of this publication indicates that it contains colours which are considered to be useful for the correct understanding of its contents. Users should therefore print this document using a colour printer.

Documents
Document Sharing Hub

Full document details: IEC 60675-2-2020

HOUSEHOLD ELECTRIC DIRECT-ACTING ROOM HEATERS – METHODS FOR MEASURING PERFORMANCE –

Part 2: Additional provisions for the measurement of the radiant factor

1 Scope

This clause of IEC 60675:1994 is applicable, with the following modification:

Replace the first paragraph with the following content:

This document applies to electric **direct-acting room heaters** .

This document defines performance characteristics related to the radiant effect and specifies methods for measuring the **radiant factor** for the information of users.

This document is used to measure the **radiant factor** of **direct-acting room heaters**.

2 Normative references

Replace Clause 2 of IEC 60675:1994 with the following content:

The following documents are referred to in the text in such a way that some or all of their content constitutes requirements of this document. For dated references, only the edition cited applies. For undated references, the latest edition of the referenced document (including any amendments) applies.

IEC 60675:1994, *Household electric direct-acting room heaters – Methods for measuring performance*
IEC 60675:1994/AMD1:1998
IEC 60675:1994/AMD2:2018

IEC 60675-3:2020, *Household electric direct-acting room heaters – Methods for measuring performance – Part 3: Additional provisions for the measurement of radiation efficiency*

3 Terms, definitions and symbols

Replace Clause 3 of IEC 60675:1994 with the following content:

For the purposes of this document, the terms and definitions given in IEC 60675:1994, IEC 60675:1994/AMD1:1998, and IEC 60675-3:2020 and the following apply.

ISO and IEC maintain terminological databases for use in standardization at the following addresses:

- IEC Electropedia: available at http://www.electropedia.org/
- ISO Online browsing platform: available at http://www.iso.org/obp

Documents
Document Sharing Hub

Full document details: IEC 60675-2-2020

Additional definitions:

3.101
radiant factor
ratio of the measured infrared heat output to the measured total energy input, expressed in %

Note 1 to entry: The **radiant factor** can be measured for **panel heaters**, **convector heaters** and **radiant heaters**

3.102
radiation efficiency
ratio of the heat flow into a (testing) chamber by radiation exchange between an active radiant heating surface and the inner surfaces of the chamber to the nominal electric power of a heater inside this **testing chamber**

Note 1 to entry: The **radiant factor** and the **radiation efficiency** are measured on different physical backgrounds and not comparable.

3.103
radiation reference plane
flat surface bounded by the edge of the reflector or, in the case where radiant parts project below this edge of the reflector, the flat surface touching the outermost radiant part (see Figure 101)

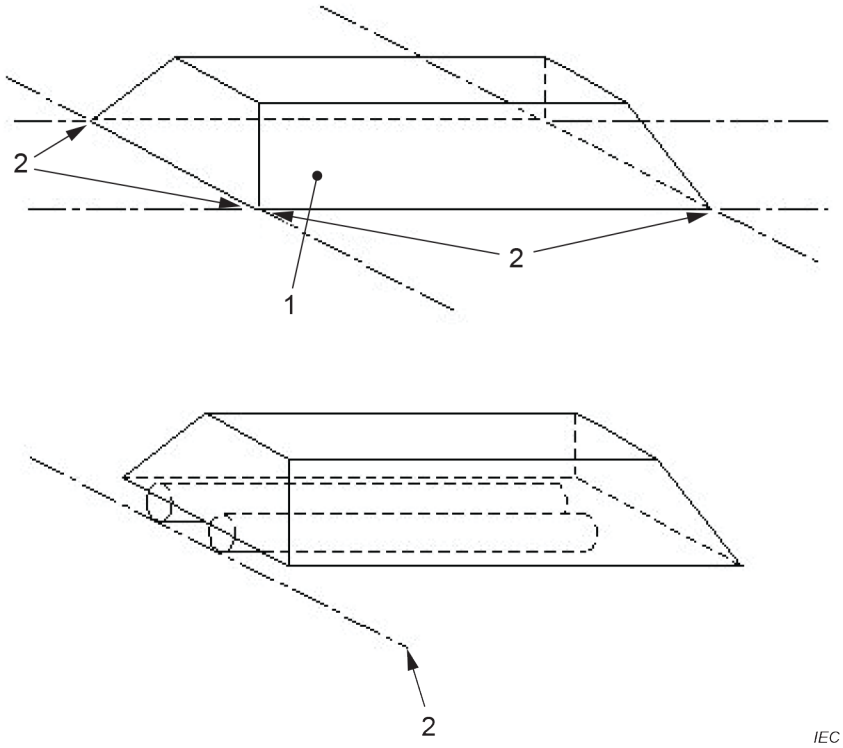

Key

1 Reflector

2 Reference plane

Figure 101 – Radiation reference plane

3.104
irradiance
E
radiant power per unit area (W/m^2) incident upon a surface

Documents
Document Sharing Hub
Full document details: IEC 60675-2-2020

3.105
measuring plane
plane parallel to the **radiation reference plane** and 100 mm ± 3 mm away from it

3.106
measuring grid
regular arrangement in the **measuring plane** of straight lines running parallel and perpendicular to the longitudinal axis of the appliance with sufficient precision (±1 mm)

Note 1 to entry: The nodal points of the **measuring grid** are located at the points of intersection of these lines (see Figure 102) such that the distance between all adjacent nodes points on these lines is equidistant in each direction. *The size of the **measuring plane** is determined individually per heater by the provision that the radiant intensity taken at the borders of the **measuring plane** is smaller than 1 % of the maximum value.*

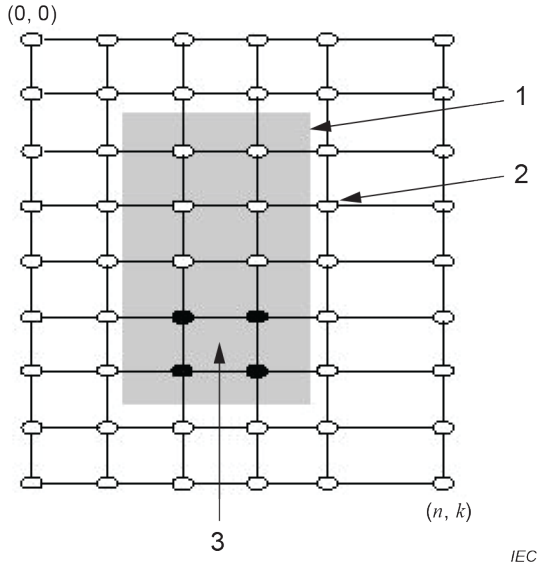

Key

1 Heater

2 Nodal point

3 Measuring cell F_{ij}

Figure 102 – Measuring grid

3.107 Symbols

The symbols shown in Table 101 are used in this document.

Documents
Document Sharing Hub
Full document details: IEC 60675-2-2020

Table 101 – Symbols

Symbol	Title	Unit
E	Actual irradiance from radiant heater	W/m^2
E_{ij}	Irradiance of the appliance measured at the nodal points of the measurement	W/m^2
$\overline{E_{\mathrm{if}}}$	Average irradiance over the measurement grid F_{ij}	W/m^2
$Q_{(\mathrm{R})\mathrm{M}}$	Measured radiant output	W
Q_{M}	Measured electrical input in steady state conditions (rated power)	W
$R_{\mathrm{f(h/v)}}$	Radiant factor h: measured in horizontal position v: measured in vertical position	—
S	Radiometer sensitivity	μV/(W/m^2)
U	Sensor voltage	v

4 Classification

This clause of IEC 60675:1994 is applicable.

5 List of measurements

This clause of IEC 60675:1994 and IEC 60675:1994/AMD1:1998 is applicable.

6 General conditions for measurements

This clause of IEC 60675:1994 and IEC 60675:1994/AMD1:1998 is applicable.

7 Dimensions, mass and means of connection to the supply

This clause of IEC 60675:1994 is applicable.

8 Temperature rises of air-outlet grilles and external surfaces

This clause of IEC 60675:1994 is applicable.

9 Temperature rises of surfaces surrounding the heater

This clause of IEC 60675:1994 is applicable.

10 Warming-up time of the heater

This clause of IEC 60675:1994 is applicable.

11 Stability of room temperature

This clause of IEC 60675:1994 and IEC 60675:1994/AMD1:1998 is applicable.

Documents
Document Sharing Hub
Full document details: IEC 60675-2-2020

12 Set-back

This clause of IEC 60675:1994 is applicable.

13 Frost protection temperature

This clause of IEC 60675:1994 is applicable.

14 Inrush current

This clause of IEC 60675:1994 is applicable.

Replace Clause 15 of IEC 60675:1994 with the following content:

15 Effect of radiant heat

15.1 Determination of radiant factor

For **panel heaters**, **convector heaters** and **radiant heaters**, the **radiant factor** shall be determined in accordance with Annex AA of this document.

15.2 Determination of radiation efficiency

For **low temperature radiant heaters**, the **radiation efficiency** may be determined in accordance with Annex AA of IEC 60675-3:2020.

16 Measurement of the usable power

This clause of IEC 60675:1994/AMD1:1998 is applicable.

17 Verification of the maximum room temperature promoted by the manufacturer

This clause of IEC 60675:1994/AMD2:2018 is applicable.

Documents
Document Sharing Hub

Full document details: IEC 60675-2-2020

Annex A
(normative)

Climatic test room

This annex of IEC 60675:1994 is applicable.

Documents
Document Sharing Hub

Full document details: IEC 60675-2-2020

Annex B
(informative)

Information provided at point-of-sale

This annex of IEC 60675:1994 and the modifications in IEC 60675:1994/AMD1:1998 and IEC 60675:1994/AMD2:2018 apply.

Documents
Document Sharing Hub

Full document details: IEC 60675-2-2020