IEC 60689

Edition 2.0 2008-11

INTERNATIONAL STANDARD

NORME INTERNATIONALE

Measurement and test methods for tuning fork quartz crystal units in the range from 10 kHz to 200 kHz and standard values

Méthodes de mesure et d'essai concernant le réglage des résonateurs à quartz dans la plage comprise entre 10 kHz et 200 kHz et valeurs normales

IEC 60689:2008

Documents
Document Sharing Hub

Full document details: IEC 60689 2008

THIS PUBLICATION IS COPYRIGHT PROTECTED

Copyright © 2008 IEC, Geneva, Switzerland

All rights reserved. Unless otherwise specified, no part of this publication may be reproduced or utilized in any form or by any means, electronic or mechanical, including photocopying and microfilm, without permission in writing from either IEC or IEC's member National Committee in the country of the requester.
If you have any questions about IEC copyright or have an enquiry about obtaining additional rights to this publication, please contact the address below or your local IEC member National Committee for further information.

Droits de reproduction réservés. Sauf indication contraire, aucune partie de cette publication ne peut être reproduite ni utilisée sous quelque forme que ce soit et par aucun procédé, électronique ou mécanique, y compris la photocopie et les microfilms, sans l'accord écrit de la CEI ou du Comité national de la CEI du pays du demandeur.
Si vous avez des questions sur le copyright de la CEI ou si vous désirez obtenir des droits supplémentaires sur cette publication, utilisez les coordonnées ci-après ou contactez le Comité national de la CEI de votre pays de résidence.

IEC Central Office
3, rue de Varembé
CH-1211 Geneva 20
Switzerland

Tel.: +41 22 919 02 11
Fax: +41 22 919 03 00
info@iec.ch
www.iec.ch

About the IEC

The International Electrotechnical Commission (IEC) is the leading global organization that prepares and publishes International Standards for all electrical, electronic and related technologies.

About IEC publications

The technical content of IEC publications is kept under constant review by the IEC. Please make sure that you have the latest edition, a corrigenda or an amendment might have been published.

Useful links:

IEC publications search - www.iec.ch/searchpub

The advanced search enables you to find IEC publications by a variety of criteria (reference number, text, technical committee,…).
It also gives information on projects, replaced and withdrawn publications.

IEC Just Published - webstore.iec.ch/justpublished

Stay up to date on all new IEC publications. Just Published details all new publications released. Available on-line and also once a month by email.

Electropedia - www.electropedia.org

The world's leading online dictionary of electronic and electrical terms containing more than 30 000 terms and definitions in English and French, with equivalent terms in additional languages. Also known as the International Electrotechnical Vocabulary (IEV) on-line.

Customer Service Centre - webstore.iec.ch/csc

If you wish to give us your feedback on this publication or need further assistance, please contact the Customer Service Centre: csc@iec.ch.

A propos de la CEI

La Commission Electrotechnique Internationale (CEI) est la première organisation mondiale qui élabore et publie des Normes internationales pour tout ce qui a trait à l'électricité, à l'électronique et aux technologies apparentées.

A propos des publications CEI

Le contenu technique des publications de la CEI est constamment revu. Veuillez vous assurer que vous possédez l'édition la plus récente, un corrigendum ou amendement peut avoir été publié.

Liens utiles:

Recherche de publications CEI - www.iec.ch/searchpub

La recherche avancée vous permet de trouver des publications CEI en utilisant différents critères (numéro de référence, texte, comité d'études,…).
Elle donne aussi des informations sur les projets et les publications remplacées ou retirées.

Just Published CEI - webstore.iec.ch/justpublished

Restez informé sur les nouvelles publications de la CEI. Just Published détaille les nouvelles publications parues. Disponible en ligne et aussi une fois par mois par email.

Electropedia - www.electropedia.org

Le premier dictionnaire en ligne au monde de termes électroniques et électriques. Il contient plus de 30 000 termes et définitions en anglais et en français, ainsi que les termes équivalents dans les langues additionnelles. Egalement appelé Vocabulaire Electrotechnique International (VEI) en ligne.

Service Clients - webstore.iec.ch/csc

Si vous désirez nous donner des commentaires sur cette publication ou si vous avez des questions contactez-nous: csc@iec.ch.

Documents
Document Sharing Hub

Full document details: IEC 60689 2008

IEC 60689

Edition 2.0 2008-11

INTERNATIONAL STANDARD

NORME INTERNATIONALE

Measurement and test methods for tuning fork quartz crystal units in the range from 10 kHz to 200 kHz and standard values

Méthodes de mesure et d'essai concernant le réglage des résonateurs à quartz dans la plage comprise entre 10 kHz et 200 kHz et valeurs normales

INTERNATIONAL
ELECTROTECHNICAL
COMMISSION

COMMISSION
ELECTROTECHNIQUE
INTERNATIONALE

PRICE CODE
CODE PRIX

R

ICS 31.140

ISBN 978-2-8322-0883-0

Warning! Make sure that you obtained this publication from an authorized distributor.
Attention! Veuillez vous assurer que vous avez obtenu cette publication via un distributeur agréé.

AVA Documents
Document Sharing Hub

® Registered trademark of the International Electrotechnical Commission
Marque déposée de la Commission Electrotechnique Internationale

Full document details: IEC 60689 2008

CONTENTS

FOREWORD 4
1 Scope 6
2 Normative references 6
3 Overview 6
3.1 General 6
3.2 Applied frequency range 6
3.3 Measurement method 6
3.4 Load capacitance 7
3.5 Recommended drive level 7
3.6 Measurement conditions 7
3.7 Measurement of frequency-temperature characteristics 7
3.8 Load capacitance frequency characteristics 7
4 Measurement methods 7
4.1 Method A 7
4.1.1 Vector network analyzer/vector impedance analyzer 7
4.1.2 Block diagram 7
4.1.3 Specifications for vector network analyzer/vector impedance analyzer 8
4.1.4 Test fixture 8
4.1.5 Measurement of equivalent circuit constants 9
4.1.6 Frequency pulling 10
4.2 Method B 10
4.2.1 General 10
4.2.2 Block diagram 10
4.2.3 Calibration 11
4.2.4 Procedure 11
5 Measurement conditions 12
5.1 General 12
5.2 Measurement conditions 12
5.3 Measurement of the frequency-temperature dependence 13
5.3.1 General 13
5.3.2 Block diagram 13
5.3.3 Determination of the turnover point and parabolic coefficient β (standard reference method) 13
5.3.4 Measurement of the frequency versus temperature characteristics (mass production method) 14
5.3.5 Frequency C_L curve 15
6 Test and environmental examination 15
6.1 Application of the definition of IEC 60122-1 15
6.2 Magnetism – Influence of a magnetic field on the frequency 16
6.3 Enclosure 16
6.4 Measuring conditions and electric performance 16
6.4.1 General 16
6.4.2 Measurement conditions 16
6.4.3 Standard values 16
Bibliography 18

Documents
Document Sharing Hub
Full document details: IEC 60689 2008

Figure 1 – Block diagram of the measurement method using the vector network analyzer or vector impedance analyzer 8
Figure 2 – Block diagram of test fixture 9
Figure 3 – Block diagram of test fixture (including a load capacitance) 9
Figure 4 – Block diagram of test fixture for bridge method 11
Figure 5 – Block diagram of test fixture for bridge method (including a load capacitance) 11
Figure 6 – Block diagram of measurement of the frequency-temperature dependence 13
Figure 7 – Frequency–temperature template (Turnover point: 25 ± 5 °C, β = -45×10^{-9}/°C^2) 14
Figure 8a) – $\Delta f/f$ versus C_L curve 15
Figure 8b) – $\Delta f/f$ versus C_L curve 15
Figure 8 – $\Delta f/f$ versus C_L curve with different C_{Ls} 15

Table 1 – Specifications for vector network analyzer/vector impedance analyzer 8
Table 2 – Standard values 17

Documents
Document Sharing Hub

Full document details: IEC 60689 2008

INTERNATIONAL ELECTROTECHNICAL COMMISSION

MEASUREMENT AND TEST METHODS FOR TUNING FORK QUARTZ CRYSTAL UNITS IN THE RANGE FROM 10 kHz TO 200 kHz AND STANDARD VALUES

FOREWORD

1) The International Electrotechnical Commission (IEC) is a worldwide organization for standardization comprising all national electrotechnical committees (IEC National Committees). The object of IEC is to promote international co-operation on all questions concerning standardization in the electrical and electronic fields. To this end and in addition to other activities, IEC publishes International Standards, Technical Specifications, Technical Reports, Publicly Available Specifications (PAS) and Guides (hereafter referred to as "IEC Publication(s)"). Their preparation is entrusted to technical committees; any IEC National Committee interested in the subject dealt with may participate in this preparatory work. International, governmental and non-governmental organizations liaising with the IEC also participate in this preparation. IEC collaborates closely with the International Organization for Standardization (ISO) in accordance with conditions determined by agreement between the two organizations.
2) The formal decisions or agreements of IEC on technical matters express, as nearly as possible, an international consensus of opinion on the relevant subjects since each technical committee has representation from all interested IEC National Committees.
3) IEC Publications have the form of recommendations for international use and are accepted by IEC National Committees in that sense. While all reasonable efforts are made to ensure that the technical content of IEC Publications is accurate, IEC cannot be held responsible for the way in which they are used or for any misinterpretation by any end user.
4) In order to promote international uniformity, IEC National Committees undertake to apply IEC Publications transparently to the maximum extent possible in their national and regional publications. Any divergence between any IEC Publication and the corresponding national or regional publication shall be clearly indicated in the latter.
5) IEC provides no marking procedure to indicate its approval and cannot be rendered responsible for any equipment declared to be in conformity with an IEC Publication.
6) All users should ensure that they have the latest edition of this publication.
7) No liability shall attach to IEC or its directors, employees, servants or agents including individual experts and members of its technical committees and IEC National Committees for any personal injury, property damage or other damage of any nature whatsoever, whether direct or indirect, or for costs (including legal fees) and expenses arising out of the publication, use of, or reliance upon, this IEC Publication or any other IEC Publications.
8) Attention is drawn to the Normative references cited in this publication. Use of the referenced publications is indispensable for the correct application of this publication.
9) Attention is drawn to the possibility that some of the elements of this IEC Publication may be the subject of patent rights. IEC shall not be held responsible for identifying any or all such patent rights.

International Standard IEC 60689 has been prepared by IEC technical committee 49: Piezoelectric and dielectric devices for frequency control and selection.

This second edition cancels and replaces the first edition published in 1980. This edition constitutes a technical revision.

This edition includes the following significant technical changes with respect to the previous edition:

a) The title of the first edition is *Measurements and test methods for 32 kHz quartz crystal units for wrist watches and standard values*. The title is modified and the frequency range of this second edition is extended to the range from 10 kHz to 200 kHz.
b) The Lissajous method is defined in the first edition as the standard measurement method. The PI network and bridge method are used in this second edition.
c) The PI network has a transformer for impedance matching. This composition differs from that of IEC 60444-1.

AVA Documents Document Sharing Hub

Full document details: IEC 60689 2008

This bilingual version (2013-07) corresponds to the monolingual English version, published in 2008-11.

The text of this standard is based on the following documents:

FDIS	Report on voting
49/809/FDIS	49/815/RVD

Full information on the voting for the approval of this standard can be found in the report on voting indicated in the above table.

The French version of this standard has not been voted upon.

This publication has been drafted in accordance with the ISO/IEC Directives, Part 2.

The committee has decided that the contents of this publication will remain unchanged until the maintenance result date indicated on the IEC web site under "http://webstore.iec.ch" in the data related to the specific publication. At this date, the publication will be

- reconfirmed;
- withdrawn;
- replaced by a revised edition; or
- amended.

Documents
Document Sharing Hub

Full document details: IEC 60689 2008

MEASUREMENT AND TEST METHODS FOR TUNING FORK QUARTZ CRYSTAL UNITS IN THE RANGE FROM 10 kHz TO 200 kHz AND STANDARD VALUES

1 Scope

This International Standard applies to measurements and test methods for tuning fork quartz crystal units in the range from 10 kHz to 200 kHz and standard values for frequency control and selection.

2 Normative references

The following referenced documents are indispensable for the application of this document. For dated references, only the edition cited applies. For undated references, the latest edition of the referenced document (including any amendments) applies.

IEC 60027 (all parts), *Letter symbols to be used in electrical technology*

IEC 60050-561, *International Electrotechnical Vocabulary – Chapter 561: Piezoelectric devices for frequency control and selection*

IEC 60122-1, *Quartz crystal units of assessed quality – Part 1: Generic specification*

IEC 60122-3, *Quartz crystal units of assessed quality – Part 3: Standard outlines and lead connections*

IEC 60444 (series), *Measurement of quartz crystal unit parameters by zero phase technique in a π-network*

IEC 60617, *Graphical symbols for diagrams*

ISO 1000:1992, *SI units and recommendations for the use of their multiples and certain other Units*

3 Overview

3.1 General

Units, graphical symbols, letter symbols and terminology shall, wherever possible, be taken from the following standards: IEC 60027, IEC 60050-561, IEC 60122-1, IEC 60617, and ISO 1000.

3.2 Applied frequency range

The frequency range is from 10 kHz to 200 kHz.

3.3 Measurement method

The measurement method is according to the IEC 60444 series.

It is permitted to use the bridge method as a simple measuring method.

Documents
Document Sharing Hub

Full document details: IEC 60689 2008

NOTE Other methods like Lissajous-or oscillator methods are not recommended for measurement of equivalent circuit constants.

3.4 Load capacitance

Currently, defined values of load capacitance are 8 pF, 10 pF, 12 pF, 15 pF, 20 pF and 30 pF.

3.5 Recommended drive level

Currently, the recommended drive level is 0,1 μW.

3.6 Measurement conditions

Measurement conditions are given in 5.2.

3.7 Measurement of frequency-temperature characteristics

The measurement of frequency-temperature characteristics is given in Clause 5.

3.8 Load capacitance frequency characteristics

The present conditions of load capacitance and frequency characteristics are given in 5.3.4.

4 Measurement methods

4.1 Method A

The measurement method according to the IEC 60444 series gives a copy of a block diagram (including a load capacitance), test fixture (for Surface Mounted Device-units included) with additional values of the resistances for high impedance value (standard PI-network 25 Ω) and hardware requirements for a frequency range from 10 kHz to 200 kHz.

This measuring method is a standard measuring method in this document.

4.1.1 Vector network analyzer/vector impedance analyzer

The measurement method using the vector network analyzer or vector impedance analyzer is based on the following method.

4.1.2 Block diagram

Figure 1 is a block diagram of the measurement method using the vector network analyzer or vector impedance analyzer.

Documents
Document Sharing Hub

Full document details: IEC 60689 2008

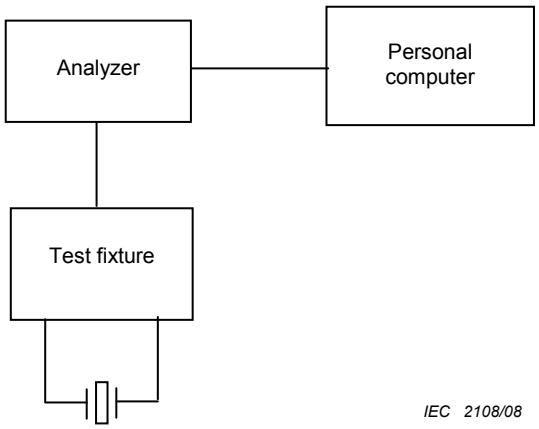

Figure 1 – Block diagram of the measurement method using the vector network analyzer or vector impedance analyzer

4.1.3 Specifications for vector network analyzer/vector impedance analyzer

Specifications for vector impedance analyzer are shown in Table 1.

Table 1 – Specifications for vector network analyzer/vector impedance analyzer

Item	Specifications
Frequency range	The measurement range of equipment shall be from 10 kHz to 200 kHz.
Frequency accuracy	1×10^{-6}
Series resistance accuracy	1 %
Signal level adjusted range	5 mV_{rms} – 1V_{rms} or 200 μA_{rms} – 20 mA_{rms}
Spurious	40 dB max.
Others	RC23C, LAN, etc.

4.1.4 Test fixture

A test fixture shall be used. This test fixture shall be electrically and mechanically compatible with the vector network analyzer or the vector impedance analyzer that is used.

Figures 2 and Figure 3 show the block diagrams of the equivalent circuit of the test fixture.

Documents
Document Sharing Hub
Full document details: IEC 60689 2008

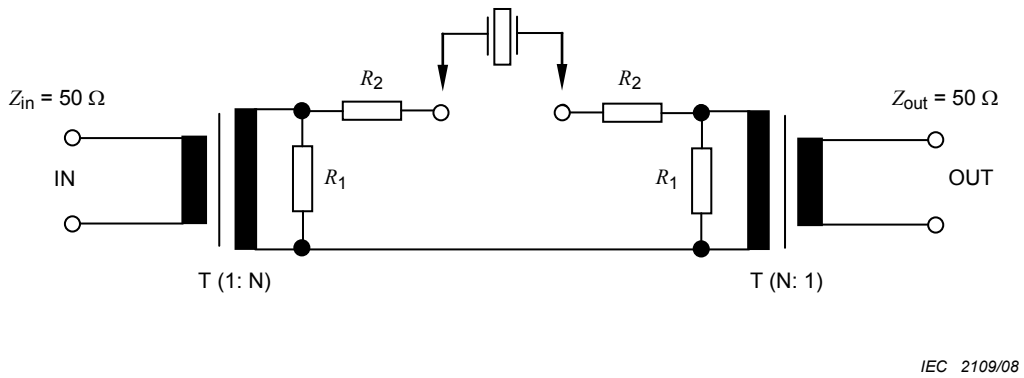

Figure 2 – Block diagram of test fixture

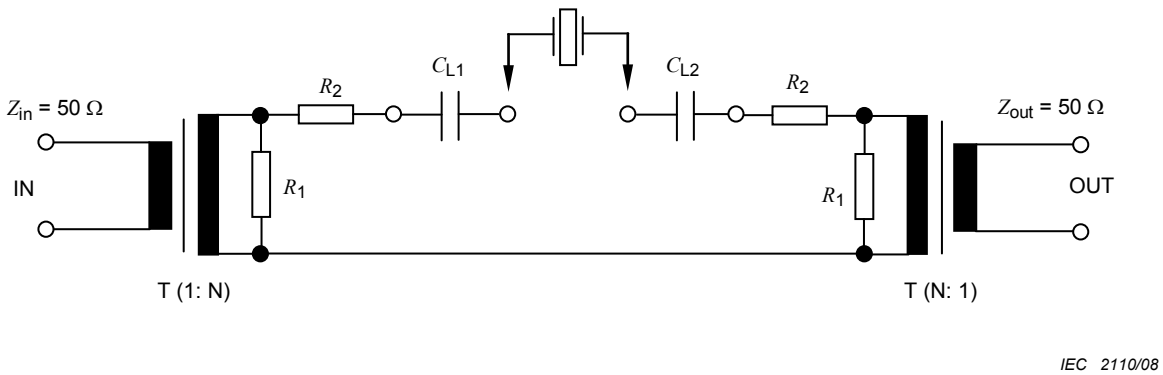

Figure 3 – Block diagram of test fixture (including a load capacitance)

The equivalent series resistance of the crystal units takes on various values according to the design. This resistance value varies in a range from 1 kΩ to 100 kΩ. For this reason, the equivalent series resistance of the crystal units determines R_1 and R_2 appropriately. These values should be determined through a contract with the customer. Since it is the low frequency range, the structure and material of the test fixture are not defined specifically.

EXAMPLE Each constant takes on the following values in the following ranges.

R_r is 1 kΩ to 10 kΩ: N_TF = 10 000, R_1 = 49,5 kΩ, and R_2 = 5,008 MΩ

R_r is 10 kΩ to 20 kΩ: N_TF = 17 000, R_1 = 50 kΩ, and R_2 = 15,000 MΩ

R_r is 20 kΩ to 40 kΩ: N_TF = 24 000, R_1 = 50,464 kΩ, and R_2 = 30 MΩ

R_r is 40 kΩ to 70 kΩ: N_TF = 33 000, R_1 = 49,809 kΩ, and R_2 = 55,008 MΩ

R_r is 70 kΩ to 200 kΩ: N_TF = 41, R_1 = 50,119 kΩ, and R_2 = 85,008 MΩ

NOTE The structure and material of the test fixture are determined through due examination.

4.1.5 Measurement of equivalent circuit constants

The measurements of equivalent resistance R_r, resonance frequency f_r, motional capacitance C_1, quality factor Q and load resonance frequency f_L are in accordance with the IEC 60444 series.

The load resonance offset between load resonance frequency f_L and resonance frequency f_r can be calculated from the parameters C_0 and C_1 by the following formula.

$$\frac{\Delta f}{f} = \frac{C_1}{2\left(C_0 + C_L\right)}$$

Documents
Document Sharing Hub
Full document details: IEC 60689 2008

4.1.6 Frequency pulling

4.1.6.1 General

The frequency pulling shall compensate the frequency shifts by means of the following:

a) tolerances on other components of oscillator (e.g. watch) circuits;

b) adjustment tolerance;

c) ageing during the economic life of oscillator (e.g. watch) circuits;

d) frequency shifts due to shocks and vibrations.

4.1.6.2 Alternative determination of the motional capacitance C_1

The motional capacitance C_1 can be determined alternatively with the frequency difference when the crystal unit is measured with 2 different load capacitances.

The motional capacitance C_1 is determined by a measurement of frequency, with use of two load capacitances C_{L1} and C_{L2}, connected in series with the crystal unit (see Figure 3).

When

$$\Delta C_L = C_{L2} - C_{L1}$$
$$\Delta f = f_{L1} - f_{L2}$$
$$\Delta f_1 = f_{L1} - f_r$$
$$\Delta f_2 = f_{L2} - f_r$$
$$f_r = \text{resonance frequency}$$

f_{L1} and f_{L2} are the resonance frequencies of the crystal unit connected in series with C_{L1} and C_{L2} respectively.

Hence

$$C_1 = \frac{2\Delta C_L}{f_r} \times \frac{\Delta f_1 \Delta f_2}{\Delta f}$$

NOTE The measurements corresponding to the motional capacitance C_1 take a long time. For quality control in production, a fixed value of C_L could be selected, and the frequency change is measured. For application in the watch making industry, the scatter of C_1 is also a very important factor.

4.2 Method B

4.2.1 General

It is permitted to use the bridge method as a simple measuring method. This simple measuring method is permitted only for frequency measurement.

4.2.2 Block diagram

Figures 4 and 5 show the block diagrams of the test fixture for the bridge method. Each resistance is based on a contract with a customer.

Documents
Document Sharing Hub

Full document details: IEC 60689 2008

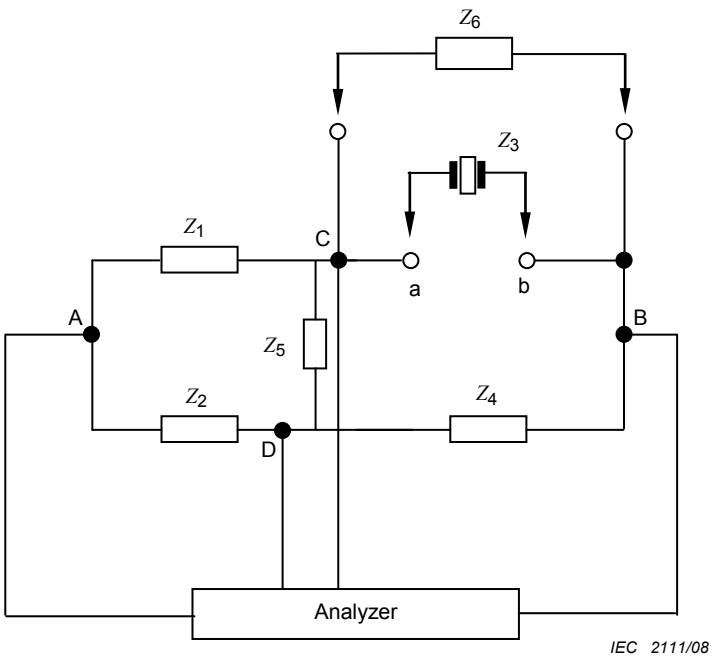

Figure 4 – Block diagram of test fixture for bridge method

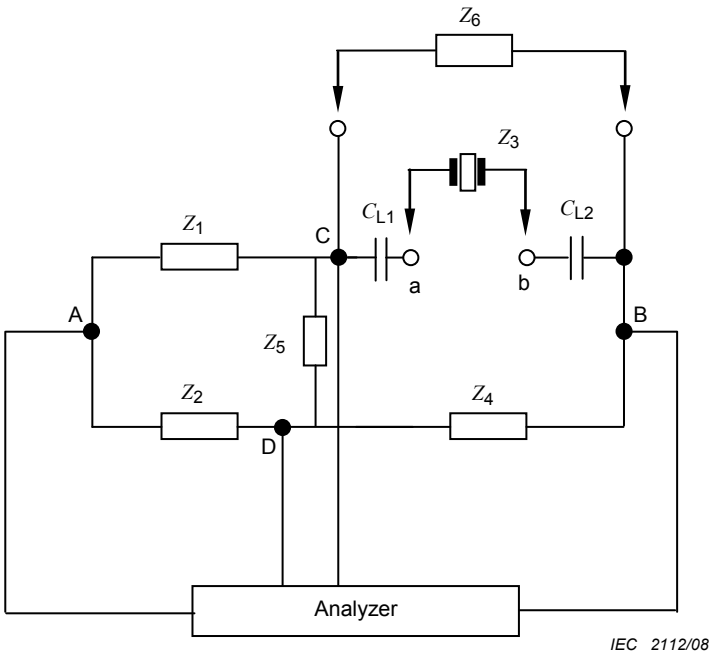

Figure 5 – Block diagram of test fixture for bridge method (including a load capacitance)

4.2.3 Calibration

The standard impedance Z_6 (resistance) is connected between terminals CB. This impedance has almost the same value as the equivalent series impedance (resistance) of the crystal units to be measured. After that, the zero phase and drive level of this measurement system are determined.

4.2.4 Procedure

The procedure is as follows:

Documents
Document Sharing Hub
Full document details: IEC 60689 2008