IEC 60695-11-2

Edition 2.0 2013-12

INTERNATIONAL STANDARD

NORME INTERNATIONALE

colour inside

Withdrawn

Fire hazard testing –
Part 11-2: Test flames – 1 kW nominal pre-mixed flame – Apparatus, confirmatory test arrangement and guidance

Essais relatifs aux risques du feu –
Partie 11-2: Flammes d'essai – Flamme à prémélange de 1 kW nominal – Appareillage, disposition d'essai de vérification et indications

IEC 60695-11-2:2013

Documents
Document Sharing Hub

Full document details: IEC 60695-11-2 2013

THIS PUBLICATION IS COPYRIGHT PROTECTED

Copyright © 2013 IEC, Geneva, Switzerland

All rights reserved. Unless otherwise specified, no part of this publication may be reproduced or utilized in any form or by any means, electronic or mechanical, including photocopying and microfilm, without permission in writing from either IEC or IEC's member National Committee in the country of the requester.
If you have any questions about IEC copyright or have an enquiry about obtaining additional rights to this publication, please contact the address below or your local IEC member National Committee for further information.

Droits de reproduction réservés. Sauf indication contraire, aucune partie de cette publication ne peut être reproduite ni utilisée sous quelque forme que ce soit et par aucun procédé, électronique ou mécanique, y compris la photocopie et les microfilms, sans l'accord écrit de la CEI ou du Comité national de la CEI du pays du demandeur.
Si vous avez des questions sur le copyright de la CEI ou si vous désirez obtenir des droits supplémentaires sur cette publication, utilisez les coordonnées ci-après ou contactez le Comité national de la CEI de votre pays de résidence.

IEC Central Office
3, rue de Varembé
CH-1211 Geneva 20
Switzerland

Tel.: +41 22 919 02 11
Fax: +41 22 919 03 00
info@iec.ch
www.iec.ch

About the IEC

The International Electrotechnical Commission (IEC) is the leading global organization that prepares and publishes International Standards for all electrical, electronic and related technologies.

About IEC publications

The technical content of IEC publications is kept under constant review by the IEC. Please make sure that you have the latest edition, a corrigenda or an amendment might have been published.

Useful links:

IEC publications search - www.iec.ch/searchpub

The advanced search enables you to find IEC publications by a variety of criteria (reference number, text, technical committee,…).
It also gives information on projects, replaced and withdrawn publications.

IEC Just Published - webstore.iec.ch/justpublished

Stay up to date on all new IEC publications. Just Published details all new publications released. Available on-line and also once a month by email.

Electropedia - www.electropedia.org

The world's leading online dictionary of electronic and electrical terms containing more than 30 000 terms and definitions in English and French, with equivalent terms in additional languages. Also known as the International Electrotechnical Vocabulary (IEV) on-line.

Customer Service Centre - webstore.iec.ch/csc

If you wish to give us your feedback on this publication or need further assistance, please contact the Customer Service Centre: csc@iec.ch.

A propos de la CEI

La Commission Electrotechnique Internationale (CEI) est la première organisation mondiale qui élabore et publie des Normes internationales pour tout ce qui a trait à l'électricité, à l'électronique et aux technologies apparentées.

A propos des publications CEI

Le contenu technique des publications de la CEI est constamment revu. Veuillez vous assurer que vous possédez l'édition la plus récente, un corrigendum ou amendement peut avoir été publié.

Liens utiles:

Recherche de publications CEI - www.iec.ch/searchpub

La recherche avancée vous permet de trouver des publications CEI en utilisant différents critères (numéro de référence, texte, comité d'études,…).
Elle donne aussi des informations sur les projets et les publications remplacées ou retirées.

Just Published CEI - webstore.iec.ch/justpublished

Restez informé sur les nouvelles publications de la CEI. Just Published détaille les nouvelles publications parues. Disponible en ligne et aussi une fois par mois par email.

Electropedia - www.electropedia.org

Le premier dictionnaire en ligne au monde de termes électroniques et électriques. Il contient plus de 30 000 termes et définitions en anglais et en français, ainsi que les termes équivalents dans les langues additionnelles. Egalement appelé Vocabulaire Electrotechnique International (VEI) en ligne.

Service Clients - webstore.iec.ch/csc

Si vous désirez nous donner des commentaires sur cette publication ou si vous avez des questions contactez-nous: csc@iec.ch.

Withdrawn

Documents
Document Sharing Hub

Full document details: IEC 60695-11-2 2013

IEC 60695-11-2

Edition 2.0 2013-12

INTERNATIONAL STANDARD

NORME INTERNATIONALE

colour inside

withdrawn

Fire hazard testing –
Part 11-2: Test flames – 1 kW nominal pre-mixed flame – Apparatus, confirmatory test arrangement and guidance

Essais relatifs aux risques du feu –
Partie 11-2: Flammes d'essai – Flamme à prémélange de 1 kW nominal – Appareillage, disposition d'essai de vérification et indications

INTERNATIONAL
ELECTROTECHNICAL
COMMISSION

COMMISSION
ELECTROTECHNIQUE
INTERNATIONALE

PRICE CODE
CODE PRIX S

ICS 13.220.40

ISBN 978-2-8322-1285-1

Warning! Make sure that you obtained this publication from an authorized distributor.
Attention! Veuillez vous assurer que vous avez obtenu cette publication via un distributeur agréé.

AVA Documents
Document Sharing Hub

® Registered trademark of the International Electrotechnical Commission
Marque déposée de la Commission Electrotechnique Internationale

Full document details: IEC 60695-11-2 2013

CONTENTS

FOREWORD ... 3
INTRODUCTION ... 5
1 Scope ... 6
2 Normative references ... 6
3 Terms and definitions ... 6
4 Burner/supply arrangement ... 7
4.1 Requirements ... 7
4.2 Apparatus and fuel ... 7
4.2.1 Burner ... 7
4.2.2 Flow control ... 7
4.2.3 Copper block ... 8
4.2.4 Thermocouple ... 8
4.2.5 Temperature/time indicating/recording devices ... 8
4.2.6 Laboratory fumehood/chamber ... 8
5 Production of the test flame ... 8
6 Confirmation of the test flame ... 9
6.1 Principle ... 9
6.2 Frequency of confirmatory tests ... 9
6.3 Procedure ... 9
7 Recommended arrangements for use of the test flame ... 10
Annex A (normative) Burner construction ... 12
Annex B (informative) Examples of test arrangements ... 19
Bibliography ... 20

Figure 1 – Flame dimensions ... 11
Figure A.1 – General assembly ... 12
Figure A.2 – Pre-mixed burner details ... 13
Figure A.3 – Pre-mixed burner details ... 14
Figure A.4 – Pre-mixed burner details ... 15
Figure A.5 – Pre-mixed burner details ... 16
Figure A.6 – Example of supply arrangement for burner ... 17
Figure A.7 – Copper block ... 17
Figure A.8 – Confirmatory test arrangement ... 18
Figure B.1 – Examples of test arrangements ... 19

Withdrawn

AVA Documents
Document Sharing Hub

Full document details: IEC 60695-11-2 2013

INTERNATIONAL ELECTROTECHNICAL COMMISSION

FIRE HAZARD TESTING –

Part 11-2: Test flames – 1 kW nominal pre-mixed flame – Apparatus, confirmatory test arrangement and guidance:

FOREWORD

1) The International Electrotechnical Commission (IEC) is a worldwide organization for standardization comprising all national electrotechnical committees (IEC National Committees). The object of IEC is to promote international co-operation on all questions concerning standardization in the electrical and electronic fields. To this end and in addition to other activities, IEC publishes International Standards, Technical Specifications, Technical Reports, Publicly Available Specifications (PAS) and Guides (hereafter referred to as "IEC Publication(s)"). Their preparation is entrusted to technical committees; any IEC National Committee interested in the subject dealt with may participate in this preparatory work. International, governmental and non-governmental organizations liaising with the IEC also participate in this preparation. IEC collaborates closely with the International Organization for Standardization (ISO) in accordance with conditions determined by agreement between the two organizations.
2) The formal decisions or agreements of IEC on technical matters express, as nearly as possible, an international consensus of opinion on the relevant subjects since each technical committee has representation from all interested IEC National Committees.
3) IEC Publications have the form of recommendations for international use and are accepted by IEC National Committees in that sense. While all reasonable efforts are made to ensure that the technical content of IEC Publications is accurate, IEC cannot be held responsible for the way in which they are used or for any misinterpretation by any end user.
4) In order to promote international uniformity, IEC National Committees undertake to apply IEC Publications transparently to the maximum extent possible in their national and regional publications. Any divergence between any IEC Publication and the corresponding national or regional publication shall be clearly indicated in the latter.
5) IEC itself does not provide any attestation of conformity. Independent certification bodies provide conformity assessment services and, in some areas, access to IEC marks of conformity. IEC is not responsible for any services carried out by independent certification bodies.
6) All users should ensure that they have the latest edition of this publication.
7) No liability shall attach to IEC or its directors, employees, servants or agents including individual experts and members of its technical committees and IEC National Committees for any personal injury, property damage or other damage of any nature whatsoever, whether direct or indirect, or for costs (including legal fees) and expenses arising out of the publication, use of, or reliance upon, this IEC Publication or any other IEC Publications.
8) Attention is drawn to the Normative references cited in this publication. Use of the referenced publications is indispensable for the correct application of this publication.
9) Attention is drawn to the possibility that some of the elements of this IEC Publication may be the subject of patent rights. IEC shall not be held responsible for identifying any or all such patent rights.

International Standard IEC 60695-11-2 has been prepared by IEC technical committee 89: Fire hazard testing.

The text of this standard is based on the following documents:

FDIS	Report on voting
89/1193/FDIS	89/1204/RVD

Full information on the voting for the approval of this standard can be found in the report on voting indicated in the above table.

This publication has been drafted in accordance with the ISO/IEC Directives, Part 2.This second edition of IEC 60695-11-2 cancels and replaces the first edition published in 2003. It constitutes a technical revision.

Withdrawn

AVA Documents Document Sharing Hub

Full document details: IEC 60695-11-2 2013

It has the status of a basic safety publication in accordance with IEC Guide 104 and ISO/IEC Guide 51.

This edition includes the following significant technical changes with respect to the previous edition:

– editorial changes to align with other TC 89 test flame publications;
– editorially updated throughout;
– technical changes to the burner set up requirements – see 4.1, 4.2.2, 5 and Fig. A.6;
– technical changes to the test flame confirmation procedure – see 6.2 and 6.3.

A list of all the parts in the IEC 60695 series, under the general title *Fire hazard testing*, can be found on the IEC web site.

Part 11 consists of the following parts:

Part 11-2: *Test flames – 1 kW nominal pre-mixed flame – Apparatus, confirmatory test arrangement and guidance*

Part 11-3: *Test flames – 500 W flames – Apparatus and confirmational test methods*

Part 11-4: *Test flames – 50 W flame – Apparatus and confirmational test method*

Part 11-5: *Test flames – Needle-flame test method – Apparatus, confirmatory test arrangement and guidance*

Part 11-10: *Test flames – 50 W horizontal and vertical flame test methods*

Part 11-11: *Test flames – Determination of the characteristic heat flux for ignition from a non-contacting flame source*

Part 11-20: *Test flames – 500 W flame test methods*

Part 11-30: *Test flames – History and development from 1979 to 1999*

Part 11-40: *Test flames – Confirmatory tests – Guidance*

The committee has decided that the contents of this publication will remain unchanged until the stability date indicated on the IEC web site under "http://webstore.iec.ch" in the data related to the specific publication. At this date, the publication will be

- reconfirmed,
- withdrawn,
- replaced by a revised edition, or
- amended.

IMPORTANT – The 'colour inside' logo on the cover page of this publication indicates that it contains colours which are considered to be useful for the correct understanding of its contents. Users should therefore print this document using a colour printer.

Withdrawn

Documents
Document Sharing Hub

Full document details: IEC 60695-11-2 2013

INTRODUCTION

In the design of any electrotechnical product, the risk of fire and the potential hazards associated with fire need to be considered. In this respect the objective of component, circuit, and product design, as well as the choice of materials, is to reduce to acceptable levels the potential risks of fire during normal operating conditions, reasonable foreseeable abnormal use, malfunction, and/or failure. IEC Technical Committee 89 has developed IEC 60695-1-10, together with its companion, IEC 60695-1-11, to provide guidance on how this is to be accomplished.

The primary aims of IEC 60695-1-10 and IEC 60695-1-11 are to provide guidance on how:

a) to prevent ignition caused by an electrically energized component part, and

b) to confine any resulting fire within the bounds of the enclosure of the electrotechnical product in the event of ignition.

Secondary aims of these documents include the minimization of any flame spread beyond the product's enclosure and the minimization of harmful effects of fire effluents such as heat, smoke, toxicity and/or corrosivity.

Fires involving electrotechnical products can also be initiated from external non-electrical sources. Considerations of this nature should be dealt with in the overall fire risk assessment.

IEC 60695-11-2 provides a description of the apparatus required to produce a 1 kW test flame, and provides a description of the principle of a confirmation procedure to check that the effective power output of the flame is as intended. Guidance on confirmatory tests for test flames is given in IEC/TS 60695-11-40.

This international standard may involve hazardous materials, operations, and equipment. It does not purport to address all of the safety problems associated with its use. It is the responsibility of the user of this international standard to establish appropriate safety and health practices and determine the applicability of regulatory limitations prior to use.

Withdrawn

Documents
Document Sharing Hub

Full document details: IEC 60695-11-2 2013

FIRE HAZARD TESTING –

Part 11-2: Test flames – 1 kW nominal pre-mixed flame – Apparatus, confirmatory test arrangement and guidance

Withdrawn

1 Scope

This part of IEC 60695 gives the requirements for the production and confirmation of a nominal 1 kW, propane/air pre-mixed test flame.

This basic safety publication is intended for use by technical committees in the preparation of standards in accordance with the principles laid down in IEC Guide 104 and ISO/IEC Guide 51.

One of the responsibilities of a technical committee is, wherever applicable, to make use of basic safety publications in the preparation of its publications.

The requirements, test methods or test conditions of this basic safety publication will not apply unless specifically referred to or included in the relevant publications.

2 Normative references

The following documents, in whole or in part, are normatively referenced in this document and are indispensable for its application. For dated references, only the edition cited applies. For undated references, the latest edition of the referenced document (including any amendments) applies.

IEC 60584-1:1995, *Thermocouples – Part 1: Reference tables*

IEC 60584-2:1982, *Thermocouples – Part 2: Tolerances*
Amendment 1:1989

ISO 13943:2008, *Fire safety – Vocabulary*

3 Terms and definitions

For the purposes of this document, the terms and definitions given in ISO/IEC 13943:2008, some of which are reproduced below for the user's convenience, as well as the following apply.

3.1
combustion
exothermic reaction of a substance with an oxidizing agent

Note 1 to entry: Combustion generally emits fire effluent accompanied by flames and/or glowing.

[SOURCE: ISO/IEC 13943:2008, definition 4.46]

3.2
draught-free environment
space in which the results of experiments are not significantly affected by the local air speed

AVA Documents
Document Sharing Hub

Full document details: IEC 60695-11-2 2013

Note 1 to entry: A qualitative example is a space in which a wax candle flame remains essentially undisturbed. Quantitative examples are small-scale fire tests in which a maximum air speed of 0,1 m × s-1 or 0,2 m × s-1 sometimes specified.

[SOURCE: ISO/IEC 13943:2008, definition 4.70]

3.3
flame, noun
rapid, self-sustaining, sub-sonic propagation of combustion in a gaseous medium, usually with emission of light

[SOURCE: ISO/IEC 13943:2008, definition 4.133]

3.4
pre-mixed flame
flame in which combustion occurs in an intimate mixture of fuel and oxidizing agent

[SOURCE: ISO/IEC 13943:2008, definition 4.259]

3.5
standardized 1 kW test flame
test flame conforming to this international standard and meeting all of the requirements given in Clauses 4 to 6

Withdrawn

4 Burner/supply arrangement

4.1 Requirements

A standardized 1 kW test flame, according to this method, is one that is produced

– using hardware according to Figures A.1 to A.8,
– supplied with propane gas of purity not less than 95 %,
– supplied with air essentially free of oil and water.

The flame shall be symmetrical, stable and give a result of 46 s ± 6 s in the confirmatory test described in Clause 6.

The confirmatory test arrangement shown in Figure A.8 shall be used.

4.2 Apparatus and fuel

4.2.1 Burner

The burner shall be in accordance with Figures A.1 to A.5 inclusive.

NOTE The gas injector and flame stabilizer are removable for cleaning purposes.

4.2.2 Flow control

Flow controllers shall be used and shall be capable of:

– the measurement and control of a propane gas flow rate of about 650 cm^3/min at 23 °C and 0,1 MPa, with an accuracy of ± 2 %,
– the measurement and control of an air flow rate of about 10 dm^3/min at 23 °C and 0,1 MPa, with an accuracy of ± 2 %.

NOTE Mass flow controllers will probably have to be used in order to meet the requirements of Clause 5.

AVA Documents
Document Sharing Hub
Full document details: IEC 60695-11-2 2013

4.2.3 Copper block

A copper block 9 mm in diameter, with a mass of 10,00 g ± 0,05 g in the fully machined but undrilled state, as described in Figure A.7, shall be made from electrolytic tough pitch copper Cu-ETP USN C11000 [1][1].

4.2.4 Thermocouple

A class 1, in accordance with IEC 60584-1, mineral-insulated, metal-sheathed fine-wire thermocouple with an insulated junction, shall be used for measuring the temperature of the copper block. It shall have an overall nominal diameter of 0,5 mm and wires of, for example, NiCr and NiAl (type K), in accordance with IEC 60584-1, with the welded point located inside the sheath. The sheath shall consist of a metal resistant to continuous operation at a temperature of at least 1 050 °C. Thermocouple tolerances shall be in accordance with IEC 60584-2, class 1.

NOTE A sheath made from a nickel-based, heat resistant alloy (such as Inconel 600[2]) will satisfy the above requirements.

The preferred method of fastening the thermocouple to the copper block is by first ensuring that the thermocouple is inserted to the full depth of the hole and then by compressing the copper around the thermocouple as shown in Figure A.8.

4.2.5 Temperature/time indicating/recording devices

The temperature/time indicating/recording devices shall be appropriate for the measurement of the time for the copper block to heat up from 100 °C ± 5 °C to 700 °C ± 3 °C with a tolerance on the measured time of ± 0,5 s.

4.2.6 Laboratory fumehood/chamber

The laboratory fume hood/chamber shall have an inside volume of at least 1,0 m^3. The chamber shall provide a draught-free environment, whilst allowing normal thermal circulation of air around the test specimen. The chamber shall permit observation of tests in progress. Unless otherwise stated in the relevant specification, the inside surfaces of the chamber shall be of a dark colour and when a lux meter, facing towards the rear of the chamber, is positioned in place of the test specimen, the recorded light level shall be less than 20 lx.

For safety and convenience, it is desirable that this enclosure (which can be completely closed) is fitted with an extraction device, such as an exhaust fan, to remove products of combustion which may be toxic. If fitted, the extraction device shall be turned off during the test and turned on immediately after the test to remove the fire effluents. A positive closing damper may be needed.

NOTE 1 The amount of oxygen available to support combustion of the test specimen is important for the conduct of this flame test. For tests conducted by this method when burning times are prolonged, chambers having an inside volume of 1,0 m^3 may not be sufficient to produce accurate results.

NOTE 2 Placing a mirror in the chamber, to provide a rear view of the test specimen, has been found to be useful.

5 Production of the test flame

Set up the burner supply arrangement according to Figure A.6 ensuring leak-free connections and place the burner in the laboratory fume hood/chamber.

---

1 Figures in square brackets refer to the bibliography.

2 Inconel is the trademark of a product supplied by Special Metals Corporation. This information is given for the convenience of users of this document and does not constitute an endorsement by the IEC of the product named. Equivalent products may be used if they can be shown to lead to the same results.

Withdrawn

Documents
Document Sharing Hub

Ignite the gas and adjust the gas and air flow rates to the following values.

The volume flow rate of propane gas shall be equivalent to 650 cm^3/min ± 10 cm^3/min when measured at 23 °C and 0,1 MPa.

The volume flow rate of air shall be equivalent to 10,0 dm^3/min ± 0,3 dm^3/min when measured at 23 °C and 0,1 MPa.

NOTE These volume flow rates correspond to mass flow rates of 1,184 g/min ± 0,018 g/min for propane gas (density at 23 °C and 0,1 MPa = 1,821 g/dm^3), and 11,64 g/min ± 0,35 g/min for air (density at 23 °C and 0,1 MPa = 1,1764 g/dm^3).

The flame shall appear stable and symmetrical on examination.

6 Confirmation of the test flame

6.1 Principle

The time for the temperature of the copper block, described in Figure A.6, to increase from 100 °C ± 5 °C to 700 °C ± 3 °C shall be 46 s ± 6 s when the flame test arrangement of Figure A.8 is used.

6.2 Frequency of confirmatory tests

The confirmatory test shall be done:

a) when the gas supply is changed, or test equipment is replaced, or when data are questioned;

and either

b) before use of the test flame if the period between use exceeds one month;

or

c) at least once a month if the period between use is less than or equal to one month.

6.3 Procedure

Set up the burner supply and confirmatory test arrangement according to Figure A.8 in the laboratory fume hood/chamber, ensuring leak-free gas connections.

Temporarily remove the burner away from the copper block to ensure there is no influence of the flame on the copper block during the preliminary adjustment of gas and air flow rates.

Ignite the gas and adjust the gas and air flow rates to the values specified in Clause 5. Ensure that the flame is symmetrical. The approximate dimensions of the flame (see Figure 1), when measured in the laboratory fume hood/chamber and viewed in subdued light, are as follows:

– blue cone height: 46 mm to 78 mm;
– overall flame height: 148 mm to 208 mm.

Wait for a period of at least 5 min to allow the burner conditions to reach equilibrium.

With the temperature/time indicating/recording devices operational, re-position the burner under the copper block.

Determine the time for the temperature of the block to increase from 100 °C ± 5 °C to 700 °C ± 3 °C. If the time is 46 s ± 6 s, record the gas and air flow rates and repeat the procedure two additional times until three successive determinations are each 46 s ± 6 s.

Withdrawn

Documents
Document Sharing Hub

Full document details: IEC 60695-11-2 2013

Allow the block to cool naturally in air to below 50 °C between determinations. If the time of any determination is not 46 s ± 6 s, then all parts of the apparatus should be checked to ensure that they are in accordance with this international standard.

NOTE At temperatures above 700 °C, the thermocouple can easily be damaged; therefore it is advisable to remove the burner immediately after reaching 700 °C.

If the copper block has not been used before, make a preliminary run to condition the copper block surface. Discard the result.

7 Recommended arrangements for use of the test flame

Examples of appropriate test arrangements are given in Annex B (see Figure B.1).

When used for testing equipment, unless otherwise stated in the relevant specification, the recommended distance from the top of the burner tube to the point on the surface of the test specimen to be tested is approximately 100 mm and the burner shall be fixed in position during the test.

NOTE The distance of 100 mm was chosen to give better reproducibility than the position where the tip of the blue cone is in contact with the test specimen.

When used for testing strips of materials, where the operator may move the flame during the test to follow the distorting or burning test specimen, the tip of the blue cone should be as close as possible without touching the test specimen.

The burner shall be tilted in such a way that debris falling from the test specimen under test does not fall into the burner.

Withdrawn

AVA Documents
Document Sharing Hub

Full document details: IEC 60695-11-2 2013

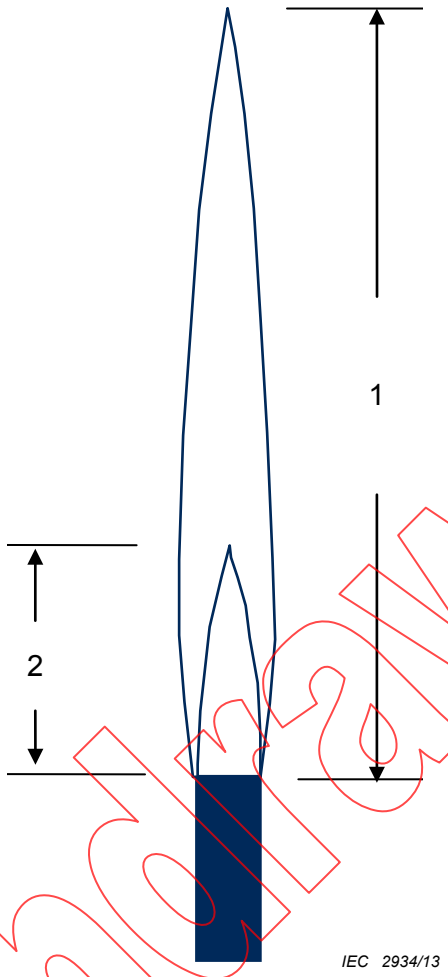

withdrawn

Key

1 Overall **flame** height (148 mm to 208 mm)

2 Blue cone height (46 mm to 78 mm)

Figure 1 – Flame dimensions

Documents
Document Sharing Hub
Full document details: IEC 60695-11-2 2013

Annex A
(normative)

Burner construction

Burner construction is demonstrated in Figures A.1 to A.8.

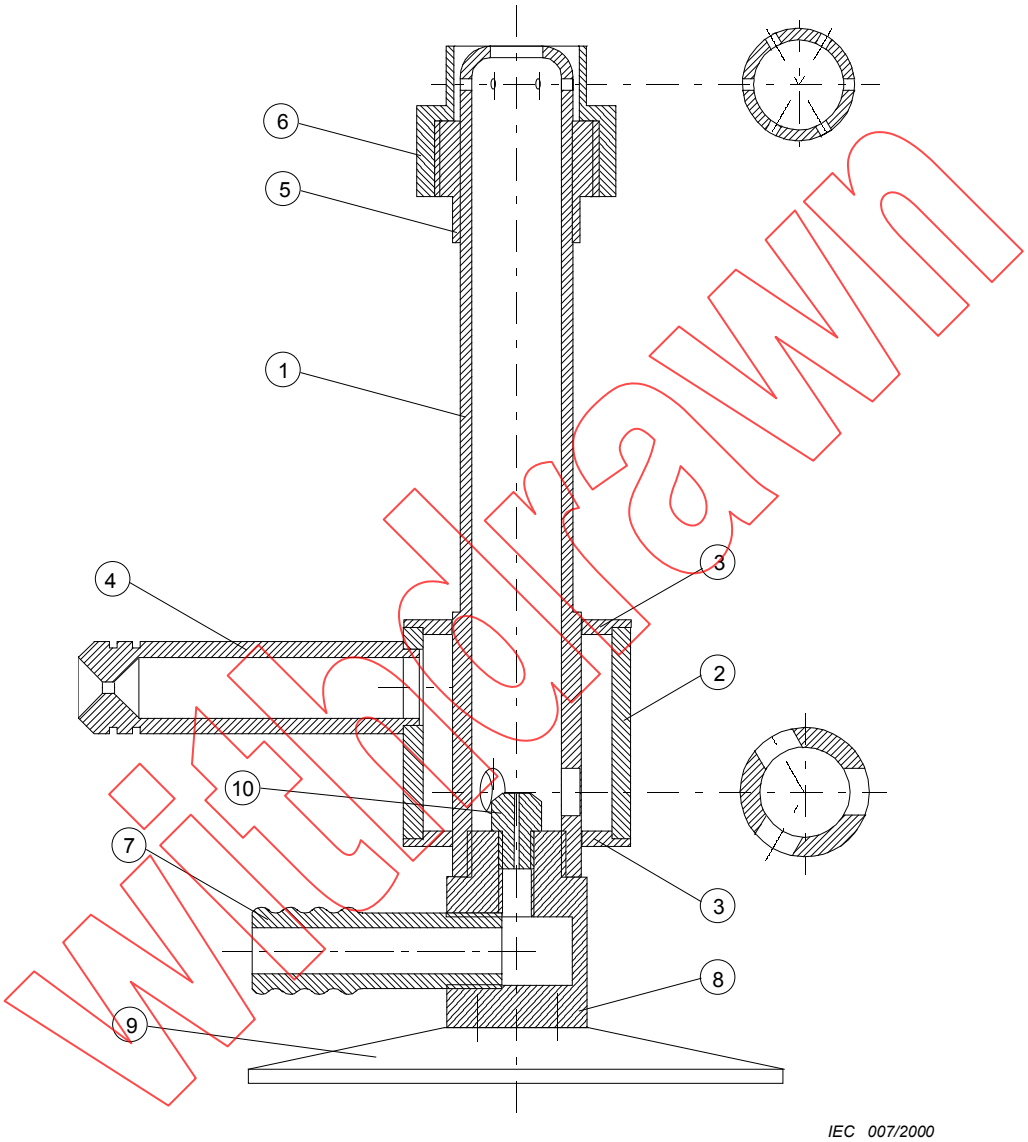

Withdrawn

Key

1	Burner barrel	Parts 1, 2, 3, 4, and 5 are hard soldered on assembly.
2, 3	Air manifold	Parts 7 and 8 may be hard soldered together, if necessary, to prevent gas leakage.
4	Air supply tube	
5, 6	Flame stabilizer	Parts 8 and 9 may be fabricated in one piece, or otherwise fastened together, to prevent gas leakage.
7	Gas supply tube	Parts 1, 2, 3, 5 and 6 are detailed in Figure A.2.
8	Elbow block	Parts 8 and 9 are detailed in Figure A.3.
9	Burner base	Parts 7 and 10 are detailed in Figure A.4.
10	Gas jet	Part 4 is detailed in Figure A.5.

Figure A.1 – General assembly

AVA Documents
Document Sharing Hub

Full document details: IEC 60695-11-2 2013