IEC 60695-11-2

Edition 3.0 2017-06

INTERNATIONAL STANDARD

NORME INTERNATIONALE

colour inside

BASIC SAFETY PUBLICATION

PUBLICATION FONDAMENTALE DE SÉCURITÉ

Fire hazard testing –
Part 11-2: Test flames – 1 kW nominal pre-mixed flame – Apparatus, confirmatory test arrangement and guidance

Essais relatifs aux risques du feu –
Partie 11-2: Flammes d'essai – Flamme à prémélange de 1 kW nominal – Appareillage, configuration pour l'essai de vérification et préconisations

IEC 60695-11-2:2017-06(en-fr)

AVA Documents
Document Sharing Hub

Full document details: IEC 60695-11-2 2017

THIS PUBLICATION IS COPYRIGHT PROTECTED
Copyright © 2017 IEC, Geneva, Switzerland

All rights reserved. Unless otherwise specified, no part of this publication may be reproduced or utilized in any form or by any means, electronic or mechanical, including photocopying and microfilm, without permission in writing from either IEC or IEC's member National Committee in the country of the requester. If you have any questions about IEC copyright or have an enquiry about obtaining additional rights to this publication, please contact the address below or your local IEC member National Committee for further information.

Droits de reproduction réservés. Sauf indication contraire, aucune partie de cette publication ne peut être reproduite ni utilisée sous quelque forme que ce soit et par aucun procédé, électronique ou mécanique, y compris la photocopie et les microfilms, sans l'accord écrit de l'IEC ou du Comité national de l'IEC du pays du demandeur. Si vous avez des questions sur le copyright de l'IEC ou si vous désirez obtenir des droits supplémentaires sur cette publication, utilisez les coordonnées ci-après ou contactez le Comité national de l'IEC de votre pays de résidence.

IEC Central Office
3, rue de Varembé
CH-1211 Geneva 20
Switzerland

Tel.: +41 22 919 02 11
Fax: +41 22 919 03 00
info@iec.ch
www.iec.ch

About the IEC
The International Electrotechnical Commission (IEC) is the leading global organization that prepares and publishes International Standards for all electrical, electronic and related technologies.

About IEC publications
The technical content of IEC publications is kept under constant review by the IEC. Please make sure that you have the latest edition, a corrigenda or an amendment might have been published.

IEC Catalogue - webstore.iec.ch/catalogue
The stand-alone application for consulting the entire bibliographical information on IEC International Standards, Technical Specifications, Technical Reports and other documents. Available for PC, Mac OS, Android Tablets and iPad.

IEC publications search - www.iec.ch/searchpub
The advanced search enables to find IEC publications by a variety of criteria (reference number, text, technical committee,…). It also gives information on projects, replaced and withdrawn publications.

IEC Just Published - webstore.iec.ch/justpublished
Stay up to date on all new IEC publications. Just Published details all new publications released. Available online and also once a month by email.

Electropedia - www.electropedia.org
The world's leading online dictionary of electronic and electrical terms containing 20 000 terms and definitions in English and French, with equivalent terms in 16 additional languages. Also known as the International Electrotechnical Vocabulary (IEV) online.

IEC Glossary - std.iec.ch/glossary
65 000 electrotechnical terminology entries in English and French extracted from the Terms and Definitions clause of IEC publications issued since 2002. Some entries have been collected from earlier publications of IEC TC 37, 77, 86 and CISPR.

IEC Customer Service Centre - webstore.iec.ch/csc
If you wish to give us your feedback on this publication or need further assistance, please contact the Customer Service Centre: csc@iec.ch.

A propos de l'IEC
La Commission Electrotechnique Internationale (IEC) est la première organisation mondiale qui élabore et publie des Normes internationales pour tout ce qui a trait à l'électricité, à l'électronique et aux technologies apparentées.

A propos des publications IEC
Le contenu technique des publications IEC est constamment revu. Veuillez vous assurer que vous possédez l'édition la plus récente, un corrigendum ou amendement peut avoir été publié.

Catalogue IEC - webstore.iec.ch/catalogue
Application autonome pour consulter tous les renseignements bibliographiques sur les Normes internationales, Spécifications techniques, Rapports techniques et autres documents de l'IEC. Disponible pour PC, Mac OS, tablettes Android et iPad.

Recherche de publications IEC - www.iec.ch/searchpub

La recherche avancée permet de trouver des publications IEC en utilisant différents critères (numéro de référence, texte, comité d'études,…). Elle donne aussi des informations sur les projets et les publications remplacées ou retirées.

IEC Just Published - webstore.iec.ch/justpublished

Restez informé sur les nouvelles publications IEC. Just Published détaille les nouvelles publications parues. Disponible en ligne et aussi une fois par mois par email.

Electropedia - www.electropedia.org

Le premier dictionnaire en ligne de termes électroniques et électriques. Il contient 20 000 termes et définitions en anglais et en français, ainsi que les termes équivalents dans 16 langues additionnelles. Egalement appelé Vocabulaire Electrotechnique International (IEV) en ligne.

Glossaire IEC - std.iec.ch/glossary
65 000 entrées terminologiques électrotechniques, en anglais et en français, extraites des articles Termes et Définitions des publications IEC parues depuis 2002. Plus certaines entrées antérieures extraites des publications des CE 37, 77, 86 et CISPR de l'IEC.

Service Clients - webstore.iec.ch/csc

Si vous désirez nous donner des commentaires sur cette publication ou si vous avez des questions contactez-nous: csc@iec.ch.

Documents
Document Sharing Hub

Full document details: IEC 60695-11-2 2017

IEC 60695-11-2

Edition 3.0 2017-06

INTERNATIONAL STANDARD

NORME INTERNATIONALE

colour inside

BASIC SAFETY PUBLICATION
PUBLICATION FONDAMENTALE DE SÉCURITÉ

Fire hazard testing –
Part 11-2: Test flames – 1 kW nominal pre-mixed flame – Apparatus, confirmatory test arrangement and guidance

Essais relatifs aux risques du feu –
Partie 11-2: Flammes d'essai – Flamme à prémélange de 1 kW nominal – Appareillage, configuration pour l'essai de vérification et préconisations

INTERNATIONAL
ELECTROTECHNICAL
COMMISSION

COMMISSION
ELECTROTECHNIQUE
INTERNATIONALE

ICS 13.220.40

ISBN 978-2-8322-4313-8

Warning! Make sure that you obtained this publication from an authorized distributor.
Attention! Veuillez vous assurer que vous avez obtenu cette publication via un distributeur agréé.

AVA Documents
Document Sharing Hub

® Registered trademark of the International Electrotechnical Commission
Marque déposée de la Commission Electrotechnique Internationale

Full document details: IEC 60695-11-2 2017

CONTENTS

FOREWORD ... 3
INTRODUCTION ... 5
1 Scope ... 6
2 Normative references ... 6
3 Terms and definitions ... 6
4 Burner/supply arrangement ... 7
4.1 Requirements ... 7
4.2 Apparatus and fuel ... 7
4.2.1 Burner ... 7
4.2.2 Flow control ... 7
4.2.3 Copper block ... 8
4.2.4 Thermocouple ... 8
4.2.5 Temperature/time indicating/recording devices ... 8
4.2.6 Laboratory fumehood/chamber ... 8
5 Production of the test flame ... 8
5.1 Selection of the method ... 8
5.2 Method A ... 9
5.3 Method B (alternative) ... 9
6 Confirmation of the test flame ... 9
6.1 Principle ... 9
6.2 Frequency of confirmatory tests ... 9
6.3 Procedure ... 10
7 Recommended arrangements for use of the test flame ... 10
Annex A (normative) Burner details, arrangements and confirmatory test ... 12
A.1 Burner construction ... 12
A.2 Gas supply arrangement ... 17
A.3 The copper block ... 18
A.4 Confirmatory test ... 18
Bibliography ... 20

Figure 1 – Flame dimensions ... 11
Figure A.1 – General assembly ... 13
Figure A.2 – Burner details (1) ... 13
Figure A.3 – Burner details (2) ... 14
Figure A.4 – Burner details (3) ... 15
Figure A.5 – Burner details (4) ... 16
Figure A.6 – Example of supply arrangement for burner ... 17
Figure A.7 – Copper block ... 18
Figure A.8 – Confirmatory test arrangement ... 19

Documents
Document Sharing Hub
Full document details: IEC 60695-11-2 2017

INTERNATIONAL ELECTROTECHNICAL COMMISSION

FIRE HAZARD TESTING –

Part 11-2: Test flames – 1 kW nominal pre-mixed flame – Apparatus, confirmatory test arrangement and guidance

FOREWORD

1) The International Electrotechnical Commission (IEC) is a worldwide organization for standardization comprising all national electrotechnical committees (IEC National Committees). The object of IEC is to promote international co-operation on all questions concerning standardization in the electrical and electronic fields. To this end and in addition to other activities, IEC publishes International Standards, Technical Specifications, Technical Reports, Publicly Available Specifications (PAS) and Guides (hereafter referred to as "IEC Publication(s)"). Their preparation is entrusted to technical committees; any IEC National Committee interested in the subject dealt with may participate in this preparatory work. International, governmental and non-governmental organizations liaising with the IEC also participate in this preparation. IEC collaborates closely with the International Organization for Standardization (ISO) in accordance with conditions determined by agreement between the two organizations.
2) The formal decisions or agreements of IEC on technical matters express, as nearly as possible, an international consensus of opinion on the relevant subjects since each technical committee has representation from all interested IEC National Committees.
3) IEC Publications have the form of recommendations for international use and are accepted by IEC National Committees in that sense. While all reasonable efforts are made to ensure that the technical content of IEC Publications is accurate, IEC cannot be held responsible for the way in which they are used or for any misinterpretation by any end user.
4) In order to promote international uniformity, IEC National Committees undertake to apply IEC Publications transparently to the maximum extent possible in their national and regional publications. Any divergence between any IEC Publication and the corresponding national or regional publication shall be clearly indicated in the latter.
5) IEC itself does not provide any attestation of conformity. Independent certification bodies provide conformity assessment services and, in some areas, access to IEC marks of conformity. IEC is not responsible for any services carried out by independent certification bodies.
6) All users should ensure that they have the latest edition of this publication.
7) No liability shall attach to IEC or its directors, employees, servants or agents including individual experts and members of its technical committees and IEC National Committees for any personal injury, property damage or other damage of any nature whatsoever, whether direct or indirect, or for costs (including legal fees) and expenses arising out of the publication, use of, or reliance upon, this IEC Publication or any other IEC Publications.
8) Attention is drawn to the Normative references cited in this publication. Use of the referenced publications is indispensable for the correct application of this publication.
9) Attention is drawn to the possibility that some of the elements of this IEC Publication may be the subject of patent rights. IEC shall not be held responsible for identifying any or all such patent rights.

International Standard IEC 60695-11-2 has been prepared by IEC technical committee 89: Fire hazard testing.

The text of this International Standard is based on the following documents:

CDV	Report on voting
89/1327/CDV	89/1354/RVC

Full information on the voting for the approval of this International Standard can be found in the report on voting indicated in the above table.

This document has been drafted in accordance with the ISO/IEC Directives, Part 2.

Documents
Document Sharing Hub

Full document details: IEC 60695-11-2 2017

This third edition of IEC 60695-11-2 cancels and replaces the second edition published in 2013. It constitutes a technical revision.

It has the status of a basic safety publication in accordance with IEC Guide 104 and ISO/IEC Guide 51.

This edition includes the following significant technical changes with respect to the previous edition:

- addition of an alternative production of the test flame;
- deletion of Annex B.

In this standard, the following print types are used:

- **terms defined within Clause 3: in bold type**

A list of all the parts in the IEC 60695 series, under the general title *Fire hazard testing* can be found on the IEC web site.

Part 11 consists of the following parts:

Part 11-2: *Test flames – 1 kW nominal pre-mixed flame – Apparatus, confirmatory test arrangement and guidance*

Part 11-3: *Test flames – 500 W flames – Apparatus and confirmational test methods*

Part 11-4: *Test flames – 50 W flame – Apparatus and confirmational test method*

Part 11-5: *Test flames – Needle-flame test method – Apparatus, confirmatory test arrangement and guidance*

Part 11-10: *Test flames – 50 W horizontal and vertical flame test methods*

Part 11-11: *Test flames – Determination of the characteristic heat flux for ignition from a non-contacting flame source*

Part 11-20: *Test flames – 500 W flame test methods*

Part 11-30: *Test flames – History and development from 1979 to 1999*

Part 11-40: *Test flames – Confirmatory tests – Guidance*

The committee has decided that the contents of this document will remain unchanged until the stability date indicated on the IEC website under "http://webstore.iec.ch" in the data related to the specific document. At this date, the document will be

- reconfirmed,
- withdrawn,
- replaced by a revised edition, or
- amended.

IMPORTANT – The “colour inside” logo on the cover page of this publication indicates that it contains colours which are considered to be useful for the correct understanding of its contents. Users should therefore print this publication using a colour printer.

Documents
Document Sharing Hub

Full document details: IEC 60695-11-2 2017

INTRODUCTION

In the design of any electrotechnical product, the risk of fire and the potential hazards associated with fire need to be considered. In this respect the objective of component, circuit, and product design, as well as the choice of materials, is to reduce to acceptable levels the potential risks of fire during normal operating conditions, reasonable foreseeable abnormal use, malfunction, and/or failure. The IEC has developed IEC 60695-1-10 [1][1], together with its companion, IEC 60695-1-11 [2], to provide guidance on how this is to be accomplished.

The primary aims of IEC 60695-1-10 and IEC 60695-1-11 are to provide guidance on how:

a) to prevent ignition caused by an electrically energized component part, and

b) to confine any resulting fire within the bounds of the enclosure of the electrotechnical product in the event of ignition.

Secondary aims of these documents include the minimization of any flame spread beyond the product's enclosure and the minimization of harmful effects of fire effluents such as heat, smoke, toxicity and/or corrosivity.

Fires involving electrotechnical products can also be initiated from external non-electrical sources. Considerations of this nature should be dealt with in the overall fire risk assessment.

IEC 60695-11-2 provides a description of the apparatus required to produce a 1 kW test flame, and provides a description of the principle of a confirmation procedure to check that the effective power output of the flame is as intended. Guidance on confirmatory tests for test flames is given in IEC TS 60695-11-40 [3].

This part of IEC 60695 may involve hazardous materials, operations, and equipment. It does not purport to address all of the safety problems associated with its use. It is the responsibility of the user of this international standard to establish appropriate safety and health practices and determine the applicability of regulatory limitations prior to use.

[1] Numbers in square brackets refer to the bibliography.

Documents
Document Sharing Hub

Full document details: IEC 60695-11-2 2017

FIRE HAZARD TESTING –

Part 11-2: Test flames – 1 kW nominal pre-mixed flame – Apparatus, confirmatory test arrangement and guidance

1 Scope

This part of IEC 60695 gives the requirements for the production and confirmation of a nominal 1 kW propane/air **pre-mixed flame** for use in fire hazard testing.

This basic safety publication is intended for use by technical committees in the preparation of standards in accordance with the principles laid down in IEC Guide 104 [4] and ISO/IEC Guide 51 [5].

One of the responsibilities of a technical committee is, wherever applicable, to make use of basic safety publications in the preparation of its publications.

The requirements, test methods or test conditions of this basic safety publication will not apply unless specifically referred to or included in the relevant publications.

2 Normative references

The following documents are referred to in the text in such a way that some or all of their content constitutes requirements of this document. For dated references, only the edition cited applies. For undated references, the latest edition of the referenced document (including any amendments) applies.

IEC 60584-1, *Thermocouples - Part 1: EMF specifications and tolerances*

ISO/IEC 13943:2008, *Fire safety – Vocabulary*

3 Terms and definitions

For the purposes of this document, the terms and definitions given in ISO/IEC 13943:2008, some of which are reproduced below for the user's convenience, as well as the following apply.

3.1
combustion
exothermic reaction of a substance with an oxidizing agent

Note 1 to entry **Combustion** generally emits fire effluent accompanied by **flames** and/or glowing.

[SOURCE: ISO 13943:2008, definition 4.46]

3.2
draught-free environment
space in which the results of experiments are not significantly affected by the local air speed

Note 1 to entry A qualitative example is a space in which a wax candle **flame** remains essentially undisturbed. Quantitative examples are small-scale fire tests in which a maximum air speed of 0,1 m × s^{-1} or 0,2 m × s^{-1} sometimes specified.

Documents
Document Sharing Hub

Full document details: IEC 60695-11-2 2017

[SOURCE: ISO 13943:2008, definition 4.70]

3.3
flame, noun
rapid, self-sustaining, sub-sonic propagation of **combustion** in a gaseous medium, usually with emission of light

[SOURCE: ISO 13943:2008, definition 4.133]

3.4
pre-mixed flame
flame in which **combustion** occurs in an intimate mixture of fuel and oxidizing agent

[SOURCE: ISO 13943:2008, definition 4.259]

3.5
standardized 1 kW test flame
test **flame** conforming to this international standard and meeting all of the requirements given in Clauses 4 to 6

4 Burner/supply arrangement

4.1 Requirements

A **standardized 1 kW test flame**, according to this method, is one that is produced

- using hardware according to Figure A.1 to Figure A.1,
- supplied with propane gas of purity not less than 95 %,
- supplied with air essentially free of oil and water.

The **flame** shall be symmetrical, stable and give a result of 46 s ± 6 s in the confirmatory test described in Clause 6.

The confirmatory test arrangement shown in Figure A.8 shall be used.

4.2 Apparatus and fuel

4.2.1 Burner

The burner shall be in accordance with Figure A.1 to Figure A.5 inclusive.

NOTE The gas injector and **flame** stabilizer are removable for cleaning purposes.

4.2.2 Flow control

Flow controllers shall be used and shall be capable of:

- the measurement and control of a propane gas flow rate of about 650 cm^3/min at 23 °C and 0,1 MPa, with an adequate accuracy to measure within the tolerance specified in the relevant test method (see Clause 5),
- the measurement and control of an air flow rate of about 10 dm^3/min at 23 °C and 0,1 MPa, with an adequate accuracy to measure within the tolerance specified in the relevant test method (see Clause 5).

NOTE Mass flow controllers have been found to be suitable to meet the requirements of Clause 5.

Documents
Document Sharing Hub
Full document details: IEC 60695-11-2 2017

4.2.3 Copper block

A copper block 9 mm in diameter, with a mass of 10,00 g ± 0,05 g in the fully machined but undrilled state, as described in Figure A.7, shall be made from electrolytic tough pitch copper Cu-ETP USN C11000 [6].

4.2.4 Thermocouple

A mineral-insulated, metal-sheathed fine-wire thermocouple with an insulated junction, shall be used for measuring the temperature of the copper block. It shall have an overall nominal diameter of 0,5 mm and wires of, for example, NiCr and NiAl (type K), in accordance with IEC 60584-1, with the welded point located inside the sheath. The sheath shall consist of a metal resistant to continuous operation at a temperature of at least 1 050 °C. Thermocouple tolerances shall be in accordance with IEC 60584-1, class 1.

NOTE A sheath made from a nickel-based, heat resistant alloy (such as Inconel 600[2]) will satisfy the above requirements.

The preferred method of fastening the thermocouple to the copper block is by first ensuring that the thermocouple is inserted to the full depth of the hole and then by compressing the copper around the thermocouple as shown in Figure A.8.

4.2.5 Temperature/time indicating/recording devices

The temperature/time indicating/recording devices shall be appropriate for the measurement of the time for the copper block to heat up from 100 °C ± 5 °C to 700 °C ± 3 °C with a tolerance on the measured time of ± 0,5 s.

4.2.6 Laboratory fumehood/chamber

The laboratory fume hood/chamber shall have an inside volume of at least 1,0 m^3. The chamber shall provide a **draught-free environment**, whilst allowing normal thermal circulation of air around the test specimen. The chamber shall permit observation of tests in progress. Unless otherwise stated in the relevant specification, the inside surfaces of the chamber shall be of a dark colour. When a lux meter, facing towards the rear of the chamber, is positioned in place of the test specimen, the recorded light level shall be less than 20 lx.

For safety and convenience, this enclosure (which can be completely closed) should be fitted with an extraction device, such as an exhaust fan, to remove products of **combustion** which could be toxic. If fitted, the extraction device shall be turned off during the test and turned on immediately after the test to remove the fire effluents. A positive closing damper may be needed.

NOTE 1 The amount of oxygen available to support **combustion** of the test specimen is important for the conduct of this **flame** test. For tests conducted by this method when burning times are prolonged, chambers having an inside volume of 1,0 m^3 may not be sufficient to produce accurate results.

NOTE 2 Placing a mirror in the chamber, to provide a rear view of the test specimen, has been found to be useful.

5 Production of the test flame

5.1 Selection of the method

Unless otherwise specified in the relevant standard, method A shall be used.

---

[2] This information is given for the convenience of users of this international standard and does not constitute an endorsement by the IEC of the product named. Equivalent products may be used if they can be shown to lead to the same results.

AVA Documents
Document Sharing Hub

Full document details: IEC 60695-11-2 2017

5.2 Method A

Set up the burner supply arrangement according to Figure A.6 ensuring leak-free connections and place the burner in the laboratory fume hood/chamber.

Ignite the gas and adjust the gas and air flow rates to the following values.

The volume flow rate of propane gas shall be equivalent to 650 cm^3/min ± 10 cm^3/min when measured at 23 °C and 0,1 MPa.

The volume flow rate of air shall be equivalent to 10,0 dm^3/min ± 0,3 dm^3/min when measured at 23 °C and 0,1 MPa.

NOTE These volume flow rates correspond to mass flow rates of 1,184 g/min ± 0,018 g/min for propane gas (density at 23 °C and 0,1 MPa = 1,821 g/dm^3), and 11,64 g/min ± 0,35 g/min for air (density at 23 °C and 0,1 MPa = 1,1764 g/dm^3).

The **flame** shall appear stable and symmetrical on examination.

5.3 Method B (alternative)

Set up the burner supply arrangement according to Figure A.6 ensuring leak-free connections and place the burner in the laboratory fume hood/chamber.

Ignite the gas and adjust the gas and air flow rates to the following values.

The volume flow rate of propane gas shall be equivalent to 650 cm^3/min ± 30 cm^3/min when measured at 23 °C and 0,1 MPa.

The volume flow rate of air shall be equivalent to 10,0 dm^3/min ± 0,5 dm^3/min when measured at 23 °C and 0,1 MPa.

NOTE These volume flow rates correspond to mass flow rates of 1,184 g/min ± 0,054 g/min for propane gas (density at 23 °C and 0,1 MPa = 1,821 g/dm^3), and 11,64 g/min ± 0,58 g/min for air (density at 23 °C and 0,1 MPa = 1,1764 g/dm^3).

The **flame** shall appear stable and symmetrical on examination.

6 Confirmation of the test flame

6.1 Principle

The time for the temperature of the copper block, described in Figure A.6, to increase from 100 °C ± 5 °C to 700 °C ± 3 °C shall be 46 s ± 6 s when the **flame** test arrangement of Figure A.8 is used.

6.2 Frequency of confirmatory tests

The confirmatory test shall be done;

a) when the gas supply is changed, or test equipment is replaced, or when data are questioned;

and either

b) before use of the test **flame** if the period between use exceeds one month;

or

c) at least once a month if the period between use is less than or equal to one month.

AVA Documents
Document Sharing Hub

Full document details: IEC 60695-11-2 2017

6.3 Procedure

Set up the burner supply and confirmatory test arrangement according to Figure A.8 in the laboratory fume hood/chamber, ensuring leak-free gas connections.

Temporarily remove the burner away from the copper block to ensure there is no influence of the **flame** on the copper block during the preliminary adjustment of gas and air flow rates.

Ignite the gas and adjust the gas and air flow rates to the values specified in Clause 5. Ensure that the **flame** is symmetrical. The approximate dimensions of the **flame** (see Figure 1), when measured in the laboratory fume hood/chamber and viewed in subdued light, are as follows:

- blue cone height: 46 mm to 78 mm;
- overall **flame** height: 148 mm to 208 mm.

Wait for a period of at least 5 min to allow the burner conditions to reach equilibrium.

With the temperature/time indicating/recording devices operational, re-position the burner under the copper block.

Determine the time for the temperature of the block to increase from 100 °C ± 5 °C to 700 °C ± 3 °C. If the time is 46 s ± 6 s, record the gas and air flow rates and repeat the procedure two additional times until three successive determinations are each 46 s ± 6 s. Allow the block to cool naturally in air to below 50 °C between determinations. If the time of any determination is not 46 s ± 6 s, then all parts of the apparatus should be checked to ensure that they are in accordance with this international standard.

NOTE At temperatures above 700 °C, the thermocouple can easily be damaged; therefore, it is advisable to remove the burner immediately after reaching 700 °C.

If the copper block has not been used before, make a preliminary run to condition the copper block surface. Discard the result.

7 Recommended arrangements for use of the test flame

When used for testing equipment, unless otherwise stated in the relevant standard, the recommended distance from the top of the burner tube to the point on the surface of the test specimen to be tested is approximately 100 mm and the burner shall be fixed in position during the test.

NOTE The distance of 100 mm was chosen to give better reproducibility than the position where the tip of the blue cone is in contact with the test specimen.

When used for testing strips of materials, where the operator may move the **flame** during the test to follow the distorting or burning test specimen, the tip of the blue cone should be as close as possible without touching the test specimen.

The burner shall be tilted in such a way that debris falling from the test specimen under test does not fall into the burner.

Documents
Document Sharing Hub
Full document details: IEC 60695-11-2 2017

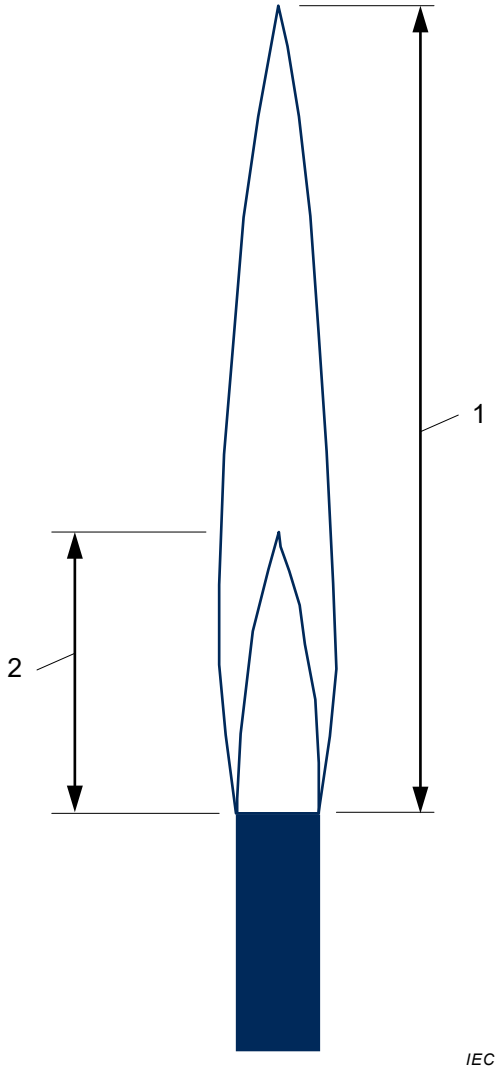

Key

1 Overall flame height (148 mm to 208 mm)

2 Blue cone height (46 mm to 78 mm)

Figure 1 – Flame dimensions

Documents
Document Sharing Hub
Full document details: IEC 60695-11-2 2017

Annex A
(normative)

Burner details, arrangements and confirmatory test

A.1 Burner construction

Figure A.1 through Figure A.8 illustrate the burner assembly.

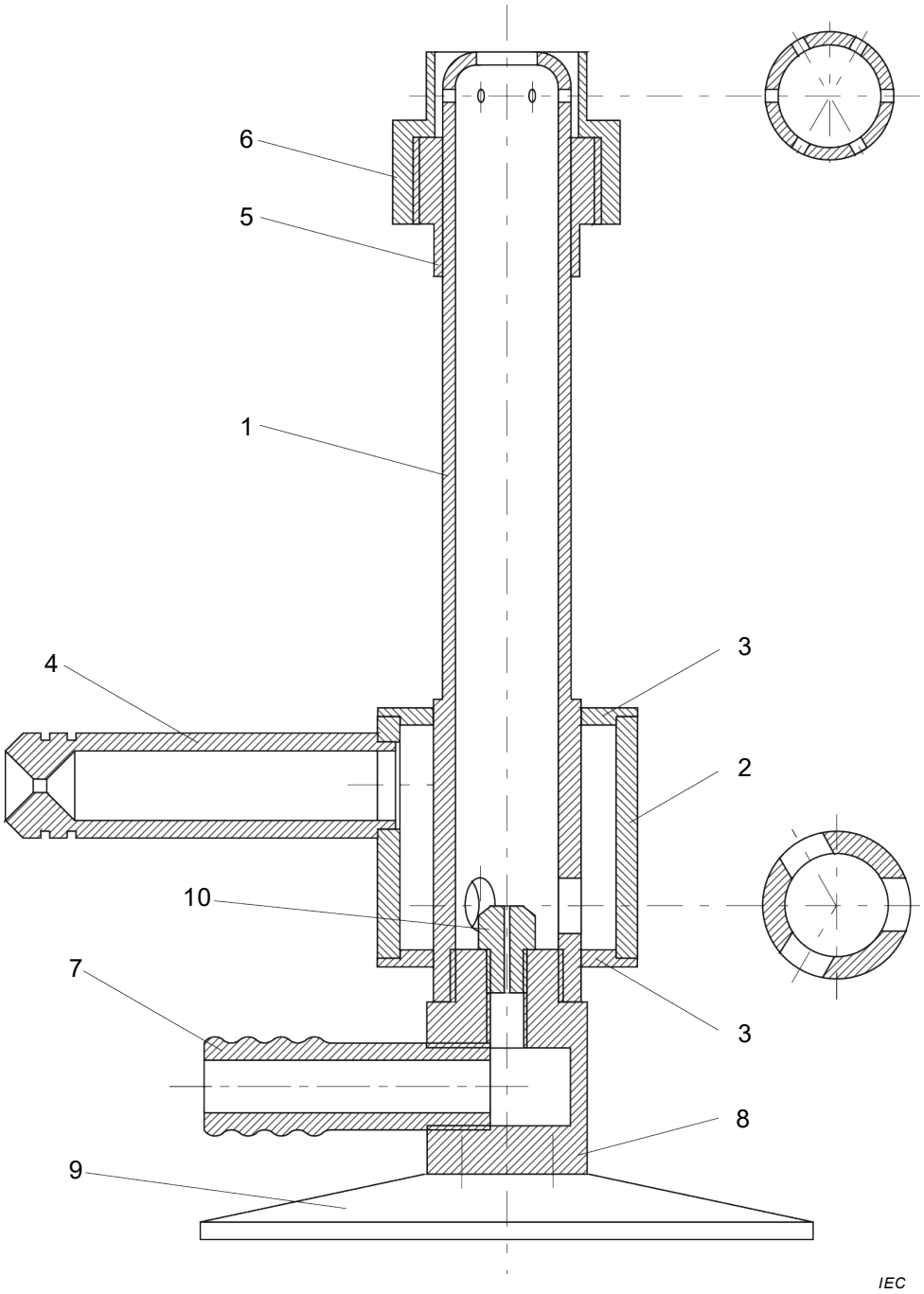

Key

1	Burner barrel	Parts 1, 2, 3, 4, and 5 are hard soldered on assembly.
2, 3	Air manifold	Parts 7 and 8 may be hard soldered together, if necessary, to prevent gas leakage.

Documents
Document Sharing Hub
Full document details: IEC 60695-11-2 2017