IEC 60695-11-3

Edition 1.0 2012-08

INTERNATIONAL STANDARD

NORME INTERNATIONALE

BASIC SAFETY PUBLICATION

PUBLICATION FONDAMENTALE DE SÉCURITÉ

Fire hazard testing –
Part 11-3: Test flames – 500 W flames – Apparatus and confirmational test methods

Essais relatifs aux risques du feu –
Partie 11-3: Flammes d'essai – Flamme de 500 W – Appareillage et méthodes d'essai de vérification

IEC 60695-11-3:2012

Documents
Document Sharing Hub

Full document details: IEC 60695-11-3 2012

THIS PUBLICATION IS COPYRIGHT PROTECTED

Copyright © 2012 IEC, Geneva, Switzerland

All rights reserved. Unless otherwise specified, no part of this publication may be reproduced or utilized in any form or by any means, electronic or mechanical, including photocopying and microfilm, without permission in writing from either IEC or IEC's member National Committee in the country of the requester.
If you have any questions about IEC copyright or have an enquiry about obtaining additional rights to this publication, please contact the address below or your local IEC member National Committee for further information.

Droits de reproduction réservés. Sauf indication contraire, aucune partie de cette publication ne peut être reproduite ni utilisée sous quelque forme que ce soit et par aucun procédé, électronique ou mécanique, y compris la photocopie et les microfilms, sans l'accord écrit de la CEI ou du Comité national de la CEI du pays du demandeur.
Si vous avez des questions sur le copyright de la CEI ou si vous désirez obtenir des droits supplémentaires sur cette publication, utilisez les coordonnées ci-après ou contactez le Comité national de la CEI de votre pays de résidence.

IEC Central Office
3, rue de Varembé
CH-1211 Geneva 20
Switzerland

Tel.: +41 22 919 02 11
Fax: +41 22 919 03 00
info@iec.ch
www.iec.ch

About the IEC

The International Electrotechnical Commission (IEC) is the leading global organization that prepares and publishes International Standards for all electrical, electronic and related technologies.

About IEC publications

The technical content of IEC publications is kept under constant review by the IEC. Please make sure that you have the latest edition, a corrigenda or an amendment might have been published.

Useful links:

IEC publications search - www.iec.ch/searchpub

The advanced search enables you to find IEC publications by a variety of criteria (reference number, text, technical committee,…).
It also gives information on projects, replaced and withdrawn publications.

IEC Just Published - webstore.iec.ch/justpublished

Stay up to date on all new IEC publications. Just Published details all new publications released. Available on-line and also once a month by email.

Electropedia - www.electropedia.org

The world's leading online dictionary of electronic and electrical terms containing more than 30 000 terms and definitions in English and French, with equivalent terms in additional languages. Also known as the International Electrotechnical Vocabulary (IEV) on-line.

Customer Service Centre - webstore.iec.ch/csc

If you wish to give us your feedback on this publication or need further assistance, please contact the Customer Service Centre: csc@iec.ch.

A propos de la CEI

La Commission Electrotechnique Internationale (CEI) est la première organisation mondiale qui élabore et publie des Normes internationales pour tout ce qui a trait à l'électricité, à l'électronique et aux technologies apparentées.

A propos des publications CEI

Le contenu technique des publications de la CEI est constamment revu. Veuillez vous assurer que vous possédez l'édition la plus récente, un corrigendum ou amendement peut avoir été publié.

Liens utiles:

Recherche de publications CEI - www.iec.ch/searchpub

La recherche avancée vous permet de trouver des publications CEI en utilisant différents critères (numéro de référence, texte, comité d'études,…).
Elle donne aussi des informations sur les projets et les publications remplacées ou retirées.

Just Published CEI - webstore.iec.ch/justpublished

Restez informé sur les nouvelles publications de la CEI. Just Published détaille les nouvelles publications parues. Disponible en ligne et aussi une fois par mois par email.

Electropedia - www.electropedia.org

Le premier dictionnaire en ligne au monde de termes électroniques et électriques. Il contient plus de 30 000 termes et définitions en anglais et en français, ainsi que les termes équivalents dans les langues additionnelles. Egalement appelé Vocabulaire Electrotechnique International (VEI) en ligne.

Service Clients - webstore.iec.ch/csc

Si vous désirez nous donner des commentaires sur cette publication ou si vous avez des questions contactez-nous: csc@iec.ch.

Documents
Document Sharing Hub

Full document details: IEC 60695-11-3 2012

IEC 60695-11-3

Edition 1.0 2012-08

INTERNATIONAL STANDARD

NORME INTERNATIONALE

BASIC SAFETY PUBLICATION
PUBLICATION FONDAMENTALE DE SÉCURITÉ

Fire hazard testing –
Part 11-3: Test flames – 500 W flames – Apparatus and confirmational test methods

Essais relatifs aux risques du feu –
Partie 11-3: Flammes d'essai – Flamme de 500 W – Appareillage et méthodes d'essai de vérification

INTERNATIONAL
ELECTROTECHNICAL
COMMISSION

COMMISSION
ELECTROTECHNIQUE
INTERNATIONALE

PRICE CODE
CODE PRIX U

ICS 13.220.40; 29.020

ISBN 978-2-83220-258-6

Warning! Make sure that you obtained this publication from an authorized distributor.
Attention! Veuillez vous assurer que vous avez obtenu cette publication via un distributeur agréé.

® Registered trademark of the International Electrotechnical Commission
Marque déposée de la Commission Electrotechnique Internationale

AVA Documents
Document Sharing Hub

Full document details: IEC 60695-11-3 2012

CONTENTS

FOREWORD 4
INTRODUCTION 6
1 Scope 7
2 Normative references 7
3 Terms and definitions 8
4 Method A – Production of a standardized 500 W nominal test flame based on existing hardware 8
4.1 Requirements 8
4.2 Apparatus and fuel 8
4.2.1 Burner 8
4.2.2 Flowmeter 8
4.2.3 Manometer 9
4.2.4 Control valve 9
4.2.5 Copper block 9
4.2.6 Thermocouple 9
4.2.7 Temperature/time indicating/recording devices 9
4.2.8 Fuel gas 9
4.2.9 Laboratory fumehood/chamber 9
4.3 Production of the test flame 10
4.4 Confirmation of the test flame 10
4.4.1 Principle 10
4.4.2 Procedure 10
4.4.3 Verification 11
5 Method C – Production of a standardized 500 W nominal test flame based on non-adjustable hardware 11
5.1 Requirements 11
5.2 Apparatus and fuel 11
5.2.1 Burner 11
5.2.2 Flowmeters 11
5.2.3 Manometers 12
5.2.4 Control valves 12
5.2.5 Copper block 12
5.2.6 Thermocouple 12
5.2.7 Temperature/time indicating/recording devices 12
5.2.8 Fuel gas 12
5.2.9 Air supply 12
5.2.10 Laboratory fumehood/chamber 13
5.3 Production of the test flame 13
5.4 Confirmation of the test flame 13
5.4.1 Principle 13
5.4.2 Procedure 13
5.4.3 Verification 14
6 Classification and designation 14
Annex A (normative) Test arrangements – Method A 17
Annex B (normative) Test arrangement – Method C 21

AVA Documents
Document Sharing Hub

Full document details: IEC 60695-11-3 2012

Annex C (informative) Recommended arrangements for the use of either of the test flames 26
Annex D (informative) Test arrangements for tests on equipment 27
Annex E (informative) Test arrangements for tests on material 28
Bibliography 29

Figure 1 – Flame dimensions 15
Figure 2 – Copper block 15
Figure 3 – Flame height gauge 16
Figure A.1 – General assembly and details 18
Figure A.2 – Supply arrangement for burner (example) 19
Figure A.3 – Confirmatory test arrangement 20
Figure B.1 – Burner, method C – General assembly 21
Figure B.2 – Burner details – Burner barrel, O-ring, air manifold and air supply tube 22
Figure B.3 – Burner details – Gas supply tube and gas jet 23
Figure B.4 – Burner details – Burner base and elbow block 23
Figure B.5 – Supply arrangement for burner (example) 24
Figure B.6 – Confirmatory test arrangement 25
Figure D.1 – Examples of test arrangements 27
Figure E.1 – Examples of test arrangements 28

Documents
Document Sharing Hub

Full document details: IEC 60695-11-3 2012

INTERNATIONAL ELECTROTECHNICAL COMMISSION

FIRE HAZARD TESTING –

Part 11-3: Test flames – 500 W flames – Apparatus and confirmational test methods

FOREWORD

1) The International Electrotechnical Commission (IEC) is a worldwide organization for standardization comprising all national electrotechnical committees (IEC National Committees). The object of IEC is to promote international co-operation on all questions concerning standardization in the electrical and electronic fields. To this end and in addition to other activities, IEC publishes International Standards, Technical Specifications, Technical Reports, Publicly Available Specifications (PAS) and Guides (hereafter referred to as "IEC Publication(s)"). Their preparation is entrusted to technical committees; any IEC National Committee interested in the subject dealt with may participate in this preparatory work. International, governmental and non-governmental organizations liaising with the IEC also participate in this preparation. IEC collaborates closely with the International Organization for Standardization (ISO) in accordance with conditions determined by agreement between the two organizations.
2) The formal decisions or agreements of IEC on technical matters express, as nearly as possible, an international consensus of opinion on the relevant subjects since each technical committee has representation from all interested IEC National Committees.
3) IEC Publications have the form of recommendations for international use and are accepted by IEC National Committees in that sense. While all reasonable efforts are made to ensure that the technical content of IEC Publications is accurate, IEC cannot be held responsible for the way in which they are used or for any misinterpretation by any end user.
4) In order to promote international uniformity, IEC National Committees undertake to apply IEC Publications transparently to the maximum extent possible in their national and regional publications. Any divergence between any IEC Publication and the corresponding national or regional publication shall be clearly indicated in the latter.
5) IEC itself does not provide any attestation of conformity. Independent certification bodies provide conformity assessment services and, in some areas, access to IEC marks of conformity. IEC is not responsible for any services carried out by independent certification bodies.
6) All users should ensure that they have the latest edition of this publication.
7) No liability shall attach to IEC or its directors, employees, servants or agents including individual experts and members of its technical committees and IEC National Committees for any personal injury, property damage or other damage of any nature whatsoever, whether direct or indirect, or for costs (including legal fees) and expenses arising out of the publication, use of, or reliance upon, this IEC Publication or any other IEC Publications.
8) Attention is drawn to the Normative references cited in this publication. Use of the referenced publications is indispensable for the correct application of this publication.
9) Attention is drawn to the possibility that some of the elements of this IEC Publication may be the subject of patent rights. IEC shall not be held responsible for identifying any or all such patent rights.

International Standard IEC 60695-11-3 has been prepared by IEC technical committee 89: Fire hazard testing.

This first edition of IEC 60695-11-3 cancels and replaces the second edition of IEC/TS 60695-11-3 published in 2004. It constitutes a technical revision and now has the status of an International Standard.

It has the status of a basic safety publication in accordance with IEC Guide 104 and ISO/IEC Guide 51.

The main changes with respect to the previous edition are the integration of minor editorial and technical changes throughout the text.

Documents
Document Sharing Hub

Full document details: IEC 60695-11-3 2012

The text of this standard is based on the following documents:

FDIS	Report on voting
89/1113/FDIS	89/1117/RVD

Full information on the voting for the approval of this standard can be found in the report on voting indicated in the above table.

This publication has been drafted in accordance with the ISO/IEC Directives, Part 2.

A list of all the parts in the IEC 60695 series, under the general title *Fire hazard testing*, can be found on the IEC website.

IEC 60695-11 consists of the following parts:

Part 11-2: Test flames – 1 kW nominal pre-mixed flame – Apparatus, confirmatory test arrangement and guidance

Part 11-3: Test flames – 500 W flames – Apparatus and confirmational test methods

Part 11-4: Test flames – 50 W flame – Apparatus and confirmational test method

Part 11-5: Test flames – Needle-flame test method – Apparatus, confirmatory test arrangement and guidance

Part 11-10: Test flames – 50 W horizontal and vertical flame test methods

Part 11-11: Test flames – Determination of the characteristic heat flux for ignition from a non-contacting flame source

Part 11-20: Test flames – 500 W flame test methods

Part 11-30: Test flames – History and development from 1979 to 1999

Part 11-40: Test flames – Confirmatory tests – Guidance

The committee has decided that the contents of this publication will remain unchanged until the stability date indicated on the IEC web site under "http://webstore.iec.ch" in the data related to the specific publication. At this date, the publication will be

- reconfirmed,
- withdrawn,
- replaced by a revised edition, or
- amended.

Documents
Document Sharing Hub

Full document details: IEC 60695-11-3 2012

INTRODUCTION

The best method for testing electrotechnical products with regard to fire hazard is to duplicate exactly the conditions occurring in practice. In most instances, this is not possible. Accordingly, for practical reasons, the testing of electrotechnical products with regard to fire hazard is best conducted by simulating as closely as possible the actual effects occurring in practice.

Work initiated by ACOS resulted in a series of standards that make available standardized test flames covering a range of powers for the use of all product committees needing such test flames. A needle flame is described in IEC 60695-11-5, a 50 W flame is described in IEC 60695-11-4, and a 1 kW flame is described in IEC 60695-11-2.

This international standard provides a description of the apparatus required to produce either of two 500 W test flames, and also provides a description of a calibration procedure to check that the test flame produced meets given requirements. Guidance on confirmatory tests for test flames is given in IEC 60695-11-40.

Four 500 W test flame methods were originally specified in Edition 1 of IEC/TS 60695-11-3, with the intention that users would determine a ranking preference. This process has resulted in two of these flame methods, B and D, being withdrawn, as shown below:

500 W test flame method	**Flame type**	**Gas**	**Approximate flame height / mm**
A	Pre-mixed	Methane	125
B	Withdrawn		
C	Pre-mixed	Methane or propane	125
D	Withdrawn		

Method A was first published in 1994 and was based on existing hardware. The flame is produced by burning methane, and the method makes use of a more tightly specified version of a burner that was used in some countries for many years.

Method C is based on non-adjustable hardware that has been specifically developed to produce a highly repeatable and stable test flame. The flame is produced by burning either methane or propane.

Both methods have been developed as technical enhancements of previous technology.

Documents
Document Sharing Hub

Full document details: IEC 60695-11-3 2012

FIRE HAZARD TESTING –

Part 11-3: Test flames – 500 W flames – Apparatus and confirmational test methods

1 Scope

This part of IEC 60695-11 provides detailed requirements for the production of either of two 500 W nominal, pre-mixed type test flames. The approximate overall height of each flame is 125 mm.

Two methods of producing a test flame are described: Method A uses methane. Method C can use either methane or propane.

This basic safety publication is intended for use by technical committees in the preparation of standards in accordance with the principles laid down in IEC Guide 104 and ISO/IEC Guide 51.

One of the responsibilities of a technical committee is, wherever applicable, to make use of basic safety publications in the preparation of its publications. The requirements, test methods or test conditions of this basic safety publication will not apply unless specifically referred to or included in the relevant publications.

2 Normative references

The following documents, in whole or in part, are normatively referenced in this document and are indispensable for its application. For dated references, only the edition cited applies. For undated references, the latest edition of the referenced document (including any amendments) applies.

IEC 60584-1:1995, *Thermocouples – Part 1: Reference tables*

IEC 60584-2 am.1 ed.1:1989, Amendment 1, *Thermocouples – Part 2: Tolerances*

IEC Guide 104:1997, *The preparation of safety publications and the use of basic safety publications and group safety publications*

ISO/IEC Guide 51:1999, *Safety aspects – Guidelines for their inclusion in standards*

ISO/IEC 13943:2008, *Fire safety – Vocabulary*

ASTM-B187/B187M-06, *Standard Specification for Copper, Bus Bar, Rod, and Shapes and General Purpose Rod, Bar, and Shapes*

Documents
Document Sharing Hub

Full document details: IEC 60695-11-3 2012

3 Terms and definitions

For the purposes of this document, the terms and definitions given in ISO/IEC 13945, as well as the following definition apply.

3.1
standardized 500 W nominal test flame
test flame that conforms to this international standard and meets all of the requirements given in Clause 4 and Clause 6

4 Method A – Production of a standardized 500 W nominal test flame based on existing hardware

4.1 Requirements

A standardized 500 W nominal test flame, according to this method, is one that is:

– produced using hardware according to Figures A.1 and A.2,
– supplied with methane gas of purity not less than 98 % at a flow rate equivalent to 965 ml/min ± 30 ml/min at 23 °C, 0,1 MPa [1], and at a back pressure of 125 mm ± 5 mm water, using the arrangements of Figure A.2.

The flame shall be symmetrical, stable and give a result of 54 s ± 2 s in the confirmatory test described in 4.4.

The confirmatory test arrangement shown in Figure A.3 shall be used.

The approximate dimensions of the flame (see Figure 1), when measured in the laboratory fumehood/chamber using the gauge as described in Figure 3, should be:

– height of inner blue cone: 40 mm;
– overall height of flame: 125 mm.

4.2 Apparatus and fuel

4.2.1 Burner

The burner shall be in accordance with Figure A.1.

NOTE The burner tube, gas injector and needle valve are removable for cleaning purposes. Care should be taken on re-assembly that the needle valve tip is not damaged and that the needle valve and valve seat (gas injector) are correctly aligned.

4.2.2 Flowmeter

The flowmeter shall be appropriate for the measurement of the gas flow rate of 965 ml/min at 23 °C, 0,1 MPa[1] to a tolerance of ± 2 %.

NOTE A mass flowmeter is the preferred means of controlling accurately the input flow rate of fuel to the burner. Other methods may be used if they can show equivalent accuracy.

[1] When corrected from the measurements taken under actual conditions of use.

Documents
Document Sharing Hub
Full document details: IEC 60695-11-3 2012

4.2.3 Manometer

The manometer shall be appropriate for the measurement of pressure in the range of 0 kPa to 7,5 kPa. A water manometer may be used for this purpose. It should be adapted to read 0 kPa to 7,5 kPa.

NOTE A manometer is required in conjunction with a mass flowmeter in order to maintain the required back pressure.

4.2.4 Control valve

A control valve is required to set the gas flow rate.

4.2.5 Copper block

The copper block shall be 9 mm in diameter, of mass 10,00 g ± 0,05 g in the fully machined but undrilled state as shown in Figure 2.

There is no verification method for the copper block. Laboratories are encouraged to maintain a standard reference unit, a secondary standard reference unit and a working unit, cross-comparing them as appropriate to verify the working system.

4.2.6 Thermocouple

A mineral insulated, metal sheathed fine-wire thermocouple with an insulated junction, is used for measuring the temperature of the copper block. The thermocouple shall be Class 1 as defined in IEC 60584-2. It shall have an overall nominal diameter of 0,5 mm and wires of, for example, NiCr and NiAl (type K as defined in IEC 60584-1) with the welded point located inside the sheath. The sheath shall consist of a metal resistant to continuous operation at a temperature of at least 1 050 °C. Thermocouple tolerances shall be in accordance with IEC 60584-2, Class 1.

NOTE A sheath made from a nickel-based, heat resistant alloy (such as Inconel 600 [2]) will satisfy the above requirements.

The preferred method of fastening the thermocouple to the copper block, after first ensuring that the thermocouple is inserted to the full depth of the hole, is by compressing the copper around the thermocouple to retain it without damage, as shown in Figure A.3.

4.2.7 Temperature/time indicating/recording devices

The temperature/time indicating/recording devices shall be appropriate for the measurement of the time for the copper block to heat up from 100 °C ± 2 °C to 700 °C ± 3 °C with a tolerance on the measured time of ± 0,5 s.

4.2.8 Fuel gas

The fuel gas shall be methane with a purity of not less than 98 %.

4.2.9 Laboratory fumehood/chamber

The laboratory fumehood/chamber shall have an inside volume of at least 0,75 m^3. The chamber shall permit observation of tests in progress and shall provide a draught-free environment, whilst allowing normal thermal circulation of air past the test specimen during burning. The inside surfaces of the walls shall be of a dark colour. When a lux meter, facing

[2] This information is given for the convenience of users of this international standard and does not constitute an endorsement by the IEC of the product named. Equivalent products may be used if they can be shown to lead to the same results.

Documents
Document Sharing Hub
Full document details: IEC 60695-11-3 2012

towards the rear of the chamber, is positioned in place of the test flame, the recorded light level shall be less than 20 lx. For safety and convenience, it is desirable that this enclosure (which can be completely closed) is fitted with an extraction device, such as an exhaust fan, to remove products of combustion which may be toxic. If fitted, the extraction device shall be turned off during the test and turned on immediately after the test to remove the fire effluents. A positive closing damper may be needed.

NOTE 1 The amount of oxygen available to support combustion of the test specimen is naturally important for the conduct of flame tests. For tests conducted by this method when burning times are prolonged, chambers having an inside volume of 0,75 m^3 may not be sufficient to produce accurate results.

NOTE 2 Placing a mirror in the chamber, to provide a rear view of the test specimen, has been found useful.

4.3 Production of the test flame

Set up the burner supply arrangement according to Figure A.2 ensuring leak-free connections and place the burner in the laboratory fumehood/chamber.

Ignite the gas and adjust the gas flow and back pressure to the required values. The air inlet shall be adjusted until the height of the inner blue cone is approximately 40 mm when measured using the gauge described in Figure 3, and then locked in position with the lock nut.

The flame shall appear stable and symmetrical on examination.

4.4 Confirmation of the test flame

4.4.1 Principle

The time taken for the temperature of the copper block, described in Figure 2, to increase from 100 °C ± 2 °C to 700 °C ± 3 °C shall be 54 s ± 2 s, when the flame confirmatory test arrangement of Figure A.3 is used.

4.4.2 Procedure

Set up the burner supply and confirmatory test arrangement according to Figure A.3 in the laboratory fume-hood/chamber, ensuring leak-free gas connections.

Temporarily remove the burner away from the copper block to ensure that there is no influence of the flame on the copper block during the preliminary adjustment of the gas flow, gas back pressure and air inlet.

Ignite the gas and adjust the gas flow and back pressure to the required values. Adjust the air inlet until the height of the inner blue cone is 40 mm ± 2 mm, when measured using the gauge described in Figure 3. Lock the air inlet in position with the lock nut.

Ensure that the overall height of the flame, measured using the gauge described in Figure 3, is approximately 125 mm and that the flame is symmetrical.

Wait for a period of at least 5 min to allow the burner conditions to reach equilibrium. Check that the gas flow and back pressure and the blue cone height are within the prescribed limits.

With the temperature/time indicating/recording devices operational, re-position the burner under the copper block. Determine the time for the temperature of the copper block to increase from 100 °C ± 2 °C to 700 °C ± 3 °C. If the time is 54 s ± 2 s, repeat the procedure two additional times until three successive determinations are within specification. Allow the copper block to cool naturally in air to below 50 °C between determinations. If the time of any determination is not 54 s ± 2 s, adjust the flame accordingly, allow the flame to reach equilibrium, and restart the procedure.

Documents
Document Sharing Hub
Full document details: IEC 60695-11-3 2012

NOTE At temperatures above 700 °C, the thermocouple can easily be damaged, therefore it is advisable to remove the burner immediately after reaching 700 °C.

If the copper block has not been used before, make a preliminary run to condition the copper block surface. Discard the result.

4.4.3 Verification

The flame is confirmed and may be used for test purposes if the results of three successive determinations are within the range 54 s ± 2 s.

5 Method C – Production of a standardized 500 W nominal test flame based on non-adjustable hardware

5.1 Requirements

A standardized 500 W nominal test flame, according to this method, is one that is produced using hardware according to Figures B.1 to B.4 (see Annex B). The burner is supplied with either

- methane gas of purity not less than 98 % at a flow rate equivalent to 965 ml/min ± 30 ml/min at 23 °C, 0,1 MPa [3], and air at a flow rate equivalent to 6,3 l/min ± 0,1 l/min at 23 °C, 0,1 MPa [3] using the arrangement of Figure B.5;

  NOTE 1 The expected back pressure for the gas is in the range of 110 mm to 170 mm of water and in the range of 20 mm to 40 mm of water for the air.

- or propane gas of purity not less than 98 % at a flow rate equivalent to 380 ml/min ± 15 ml/min at 23 °C, 0,1 MPa [3], and air at a flow rate equivalent to 5,9 l/min ± 0,1 l/min at 23 °C, 0,1 MPa [3] using the arrangement of Figure B.5.

  NOTE 2 The expected back pressure for the gas is in the range of 135 mm to 205 mm of water and in the range of 15 mm to 35 mm of water for the air.

The flame shall be symmetrical, stable and give a result of 54 s ± 2 s in the confirmatory test as described in 5.4.

The confirmatory test arrangement shown in Figure B.6 shall be used.

The approximate dimensions of the flame (see Figure 1), when measured in the laboratory fume-hood/chamber using the gauge described in Figure 3, should be:

– height of inner blue cone: 40 mm;
– overall height of flame: 125 mm.

5.2 Apparatus and fuel

5.2.1 Burner

The burner shall be in accordance with Figures B.1 to B.4.

5.2.2 Flowmeters

The flowmeters shall be appropriate

– for the measurement of methane and/or propane gas flow rates of 965 ml/min and 380 ml/min, respectively, at 23 °C, 0,1 MPa [3] to a tolerance of ± 2 %, and

[3] When corrected from the measurements taken under actual conditions of use.

Documents
Document Sharing Hub
Full document details: IEC 60695-11-3 2012

– for the measurement of air flow rates of 6,3 l/min and/or 5,9 l/min, respectively, at 23 °C, 0,1 MPa [3] to a tolerance of ± 2 %.

NOTE Mass flowmeters are the preferred means of controlling accurately the input flow rates of fuel and air to the burner. Other methods may be used if they can show equivalent accuracy.

5.2.3 Manometers

Two manometers are required, appropriate for the measurement of pressures in the range of 0 kPa to 7,5 kPa. Water manometers may be used for this purpose. They should be adapted to read 0 kPa to 7,5 kPa.

NOTE Manometers are not required when mass flowmeters are used.

5.2.4 Control valves

Two control valves are required to set the gas and air flow rates.

5.2.5 Copper block

The copper block shall be 9,0 mm in diameter, with a mass of 10,00 g ± 0,05 g in the fully machined but undrilled state, as shown in Figure 2.

There is no verification method for the copper block. Laboratories are encouraged to maintain a standard reference unit, a secondary standard reference unit and a working unit, cross-comparing them as appropriate to verify the working system.

5.2.6 Thermocouple

A mineral insulated, metal sheathed fine-wire thermocouple with an insulated junction, is used for measuring the temperature of the copper block. The thermocouple shall be Class 1 as defined in IEC60584-2. It shall have an overall nominal diameter of 0,5 mm and wires of, for example, NiCr and NiAl (type K as defined in IEC 60584-1) with the welded point located inside the sheath. The sheath shall consist of a metal resistant to continuous operation at a temperature of at least 1 050 °C. Thermocouple tolerances shall be in accordance with IEC 60584-2, class 1.

NOTE A sheath made from a nickel-based, heat resistant alloy (such as Inconel 600) will satisfy the above requirements.

The preferred method of fastening the thermocouple to the copper block, after first ensuring that the thermocouple is inserted to the full depth of the hole, is by compressing the copper around the thermocouple to retain it without damage, as shown in Figure B.6.

5.2.7 Temperature/time indicating/recording devices

The temperature/time indicating/recording devices shall be appropriate for the measurement of the time for the copper block to heat up from 100 °C ± 2 °C to 700 °C ± 3 °C with a tolerance on the measured time of ± 0,5 s.

5.2.8 Fuel gas

In cases of dispute, methane (see 5.1) shall be used with a purity of not less than 98 %.

5.2.9 Air supply

The air shall be essentially free of oil and water.

Documents
Document Sharing Hub
Full document details: IEC 60695-11-3 2012

5.2.10 Laboratory fumehood/chamber

The laboratory fumehood/chamber shall have an inside volume of at least 0,75 m^3. The chamber shall permit observation of tests in progress and shall provide a draught-free environment, whilst allowing normal thermal circulation of air past the specimen during burning. The inside walls of the chamber shall be of a dark colour. When a lux meter facing towards the rear of the chamber is positioned in place of the test flame, the recorded light level shall be less than 20 lx. For safety and convenience, it is desirable that this enclosure (which can be completely closed) is fitted with an extraction device, such as an exhaust fan, to remove products of combustion which may be toxic. If fitted, the extraction device shall be turned off during the test and turned on immediately after the test to remove the fire effluents. A positive closing damper may be needed.

NOTE 1 The amount of oxygen available to support combustion of the test specimen is naturally important for the conduct of this flame test. For tests conducted by this method when burning times are prolonged, chambers having an inside volume of 0,75 m^3 may not be sufficient to produce accurate results.

NOTE 2 Placing a mirror in the chamber, to provide a rear view of the test specimen, has been found useful.

5.3 Production of the test flame

Set up the burner supply arrangement according to Figure B.5, ensuring leak-free gas connections, and place the burner in the laboratory fumehood/chamber.

Ignite the mixture and adjust the gas and air flow rates to the required values.

The height of the inner blue cone and the overall height of the flame shall be as described in 5.1. The flame shall appear stable and symmetrical on examination.

5.4 Confirmation of the test flame

5.4.1 Principle

The time taken for the temperature of the copper block, described in Figure 2, to increase from 100 °C ± 2 °C to 700 °C ± 3 °C shall be 54 s ± 2 s, when the flame confirmatory test arrangement of Figure B.6 is used.

5.4.2 Procedure

Set up the burner supply confirmatory test arrangement according to Figure B.6 in the laboratory fumehood/chamber, ensuring leak-free gas and air connections.

Temporarily remove the burner away from the copper block to ensure there is no influence of the flame on the copper block during the preliminary adjustment of the gas and air flow rates

Ignite the gas and adjust the gas and air flow rates to the required values. Ensure that the dimensions of the flame, when measured using the gauge described in Figure 3, are within the required limits, and that the flame is symmetrical. Wait for a period of at least 5 min to allow the burner conditions to reach equilibrium. Measure the gas and air flow rates and determine that they are within the required limits.

With the temperature/time indicating/recording devices operational, re-position the burner under the copper block.

Determine the time for the temperature of the copper block to increase from 100 °C ± 2 °C to 700 °C ± 3 °C. If the time is 54 s ± 2 s, repeat the procedure two additional times until three successive determinations are within specification. Allow the copper block to cool naturally in air to below 50 °C between determinations. If the time of any determination is not 54 s ± 2 s, adjust the flame accordingly, allow the flame to reach equilibrium, and restart the procedure.

AVA Documents
Document Sharing Hub

Full document details: IEC 60695-11-3 2012

NOTE At temperatures above 700 °C, the thermocouple can easily be damaged, therefore it is advisable to remove the burner immediately after reaching 700 °C.

If the copper block has not been used before, make a preliminary run to condition the copper block surface. Discard the result.

5.4.3 Verification

The flame is confirmed and may be used for test purposes if the results of three successive determinations are within the range 54 s ± 2 s.

6 Classification and designation

Apparatus that conforms with the requirements of this international standard and produces a 500 W nominal test flame according to either Method A or Method C may be labelled:

"500 W nominal test flame apparatus – Method A, conforming to IEC 60695-11-3."

or

"500 W nominal test flame apparatus – Method C, conforming to IEC 60695-11-3."

Documents
Document Sharing Hub

Full document details: IEC 60695-11-3 2012

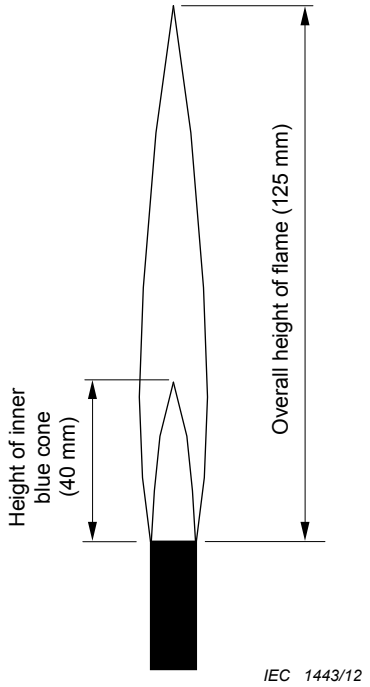

Figure 1 – Flame dimensions

Dimensions in millimetres

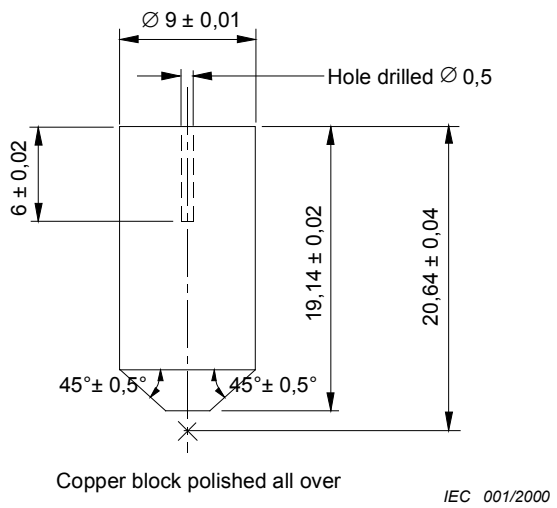

Tolerances on linear dimensions: ± 0,1 mm, unless otherwise stated.

Tolerances on angular dimensions: ± 30 min, unless otherwise stated.

Material: high conductivity electrolytic copper Cu-ETP UNS C 11000 (see ASTM-B187/B187M-06)

Mass: 10 g ± 0,05 g before drilling.

Figure 2 – Copper block

Documents
Document Sharing Hub
Full document details: IEC 60695-11-3 2012

Dimensions in millimetres

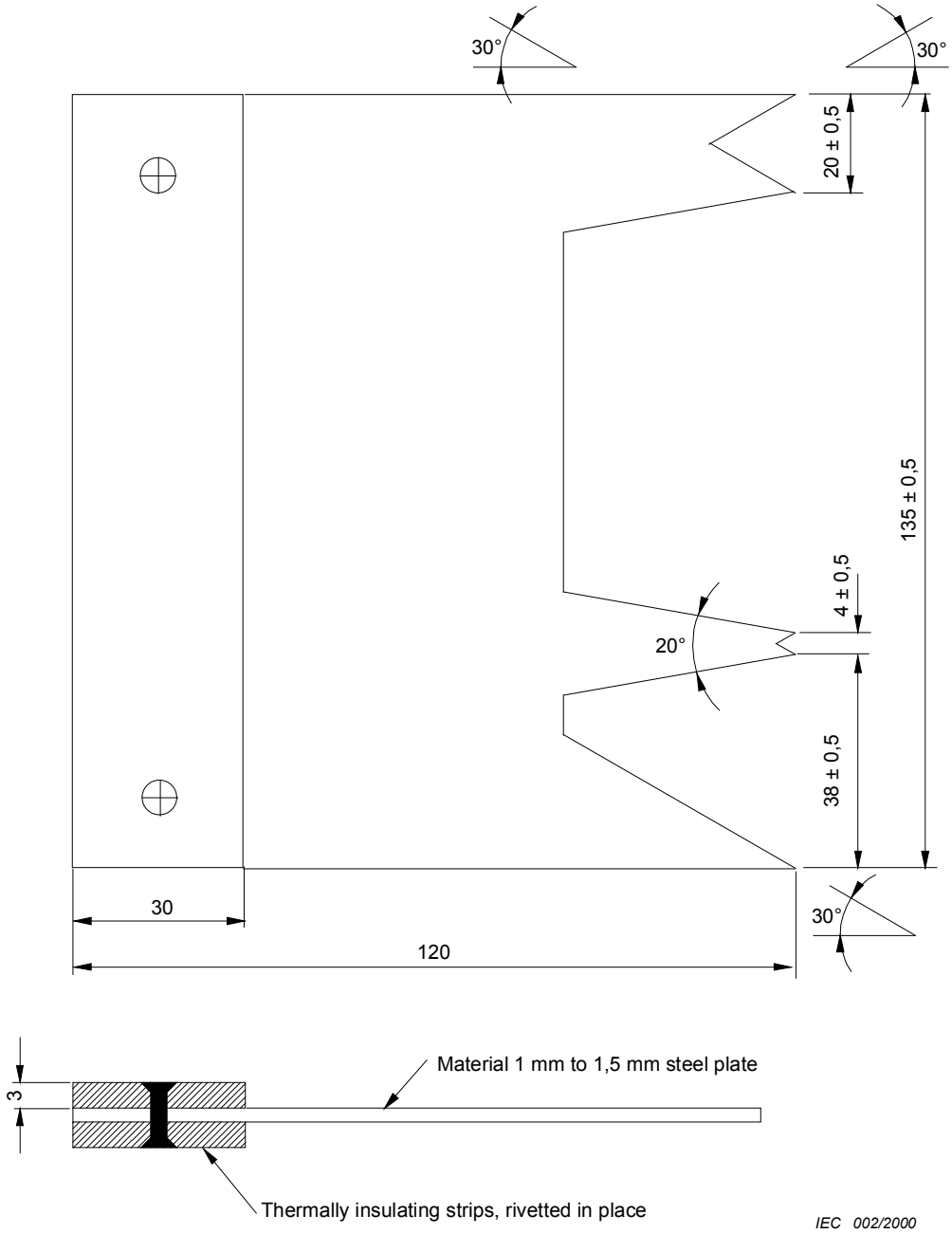

Tolerances on linear dimensions: ± 1 mm, unless otherwise stated.

Tolerances on angular dimensions: ± 5°, unless otherwise stated.

Figure 3 – Flame height gauge

Documents
Document Sharing Hub
Full document details: IEC 60695-11-3 2012

Annex A
(normative)

Test arrangements – Method A

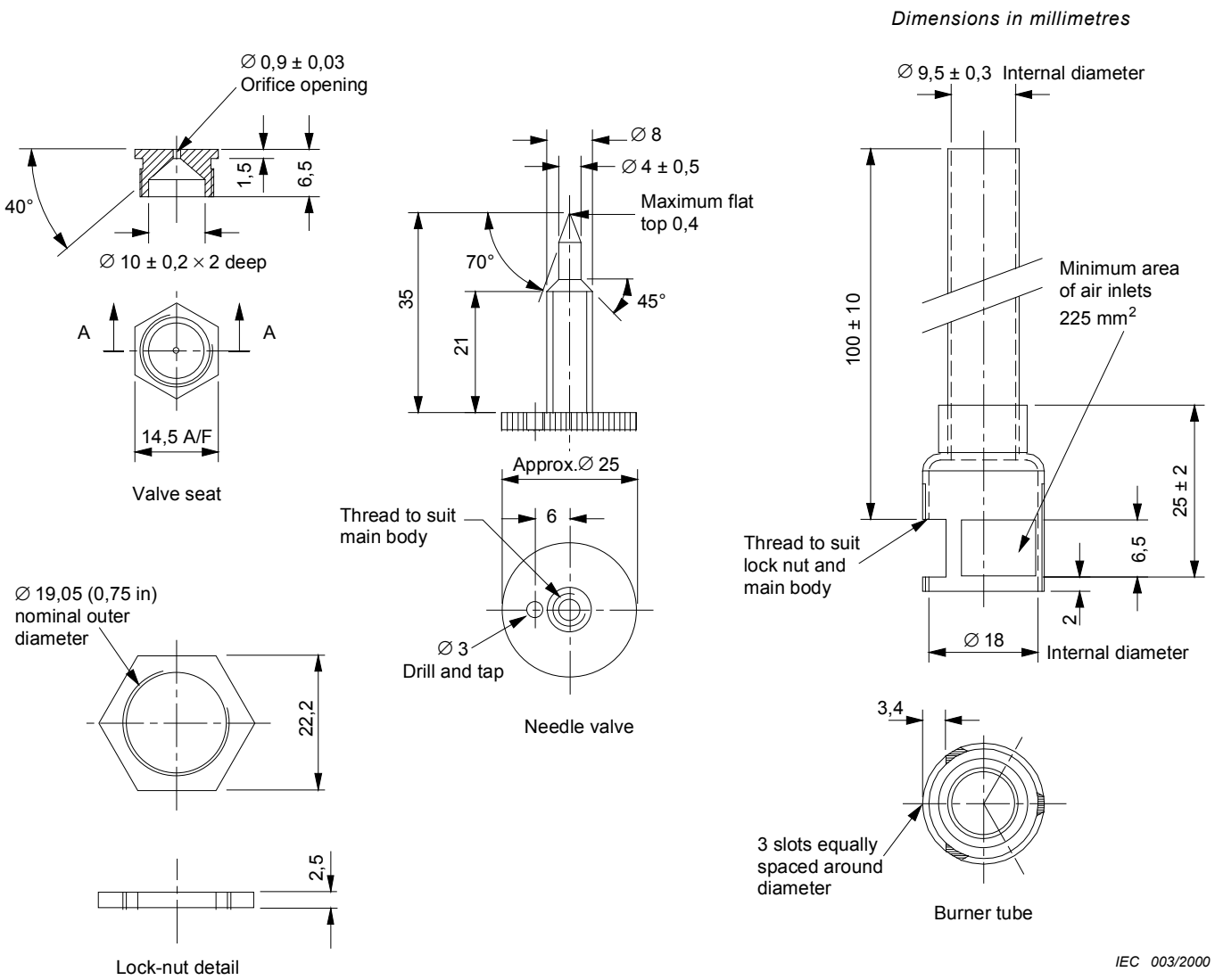

Material: brass or any other suitable material

Tolerances on linear dimensions:
xx (e.g. 20) means ± 0,5 mm
xx,x (e.g. 20,0) means ± 0,1 mm
unless otherwise stated.

Tolerances on angular dimensions:
x (e.g. 45) means ±30 min
unless otherwise stated.

Figure A.1 *(continued overleaf)*

Documents
Document Sharing Hub
Full document details: IEC 60695-11-3 2012