IEC 60695-2-10

Edition 3.0 2021-10

INTERNATIONAL STANDARD

NORME INTERNATIONALE

colour inside

HORIZONTAL PUBLICATION
PUBLICATION HORIZONTALE

Fire hazard testing –
Part 2-10: Glowing/hot-wire based test methods – Glow-wire apparatus and common test procedure

Essais relatifs aux risques du feu –
Partie 2-10: Essais au fil incandescent/chauffant – Appareillage et méthode commune d'essai

IEC 60695-2-10:2021-10(en-fr)

Documents
Document Sharing Hub

Full document details: IEC 60695-2-10 2021

THIS PUBLICATION IS COPYRIGHT PROTECTED
Copyright © 2021 IEC, Geneva, Switzerland

All rights reserved. Unless otherwise specified, no part of this publication may be reproduced or utilized in any form or by any means, electronic or mechanical, including photocopying and microfilm, without permission in writing from either IEC or IEC's member National Committee in the country of the requester. If you have any questions about IEC copyright or have an enquiry about obtaining additional rights to this publication, please contact the address below or your local IEC member National Committee for further information.

Droits de reproduction réservés. Sauf indication contraire, aucune partie de cette publication ne peut être reproduite ni utilisée sous quelque forme que ce soit et par aucun procédé, électronique ou mécanique, y compris la photocopie et les microfilms, sans l'accord écrit de l'IEC ou du Comité national de l'IEC du pays du demandeur. Si vous avez des questions sur le copyright de l'IEC ou si vous désirez obtenir des droits supplémentaires sur cette publication, utilisez les coordonnées ci-après ou contactez le Comité national de l'IEC de votre pays de résidence.

IEC Central Office
3, rue de Varembé
CH-1211 Geneva 20
Switzerland

Tel.: +41 22 919 02 11
info@iec.ch
www.iec.ch

About the IEC
The International Electrotechnical Commission (IEC) is the leading global organization that prepares and publishes International Standards for all electrical, electronic and related technologies.

About IEC publications
The technical content of IEC publications is kept under constant review by the IEC. Please make sure that you have the latest edition, a corrigendum or an amendment might have been published.

IEC publications search - webstore.iec.ch/advsearchform
The advanced search enables to find IEC publications by a variety of criteria (reference number, text, technical committee, …). It also gives information on projects, replaced and withdrawn publications.

IEC Just Published - webstore.iec.ch/justpublished
Stay up to date on all new IEC publications. Just Published details all new publications released. Available online and once a month by email.

IEC Customer Service Centre - webstore.iec.ch/csc
If you wish to give us your feedback on this publication or need further assistance, please contact the Customer Service Centre: sales@iec.ch.

IEC online collection - oc.iec.ch
Discover our powerful search engine and read freely all the publications previews. With a subscription you will always have access to up to date content tailored to your needs.

Electropedia - www.electropedia.org
The world's leading online dictionary on electrotechnology, containing more than 22 000 terminological entries in English and French, with equivalent terms in 18 additional languages. Also known as the International Electrotechnical Vocabulary (IEV) online.

A propos de l'IEC
La Commission Electrotechnique Internationale (IEC) est la première organisation mondiale qui élabore et publie des Normes internationales pour tout ce qui a trait à l'électricité, à l'électronique et aux technologies apparentées.

A propos des publications IEC
Le contenu technique des publications IEC est constamment revu. Veuillez vous assurer que vous possédez l'édition la plus récente, un corrigendum ou amendement peut avoir été publié.

Recherche de publications IEC - webstore.iec.ch/advsearchform
La recherche avancée permet de trouver des publications IEC en utilisant différents critères (numéro de référence, texte, comité d'études, …). Elle donne aussi des informations sur les projets et les publications remplacées ou retirées.

IEC Just Published - webstore.iec.ch/justpublished
Restez informé sur les nouvelles publications IEC. Just Published détaille les nouvelles publications parues. Disponible en ligne et une fois par mois par email.

Service Clients - webstore.iec.ch/csc
Si vous désirez nous donner des commentaires sur cette publication ou si vous avez des questions contactez-nous: sales@iec.ch.

IEC online collection - oc.iec.ch
Découvrez notre puissant moteur de recherche et consultez gratuitement tous les aperçus des publications. Avec un abonnement, vous aurez toujours accès à un contenu à jour adapté à vos besoins.

Electropedia - www.electropedia.org
Le premier dictionnaire d'électrotechnologie en ligne au monde, avec plus de 22 000 articles terminologiques en anglais et en français, ainsi que les termes équivalents dans 16 langues additionnelles. Egalement appelé Vocabulaire Electrotechnique International (IEV) en ligne.

AVA Documents
Document Sharing Hub

Full document details: IEC 60695-2-10 2021

IEC 60695-2-10

Edition 3.0 2021-10

INTERNATIONAL STANDARD

NORME INTERNATIONALE

colour inside

HORIZONTAL PUBLICATION
PUBLICATION HORIZONTALE

Fire hazard testing –
Part 2-10: Glowing/hot-wire based test methods – Glow-wire apparatus and common test procedure

Essais relatifs aux risques du feu –
Partie 2-10: Essais au fil incandescent/chauffant – Appareillage et méthode commune d'essai

INTERNATIONAL
ELECTROTECHNICAL
COMMISSION

COMMISSION
ELECTROTECHNIQUE
INTERNATIONALE

ICS 13.220.40; 29.020

ISBN 978-2-8322-1010-9

Warning! Make sure that you obtained this publication from an authorized distributor.
Attention! Veuillez vous assurer que vous avez obtenu cette publication via un distributeur agréé.

AVA Documents
Document Sharing Hub

® Registered trademark of the International Electrotechnical Commission
Marque déposée de la Commission Electrotechnique Internationale

Full document details: IEC 60695-2-10 2021

CONTENTS

FOREWORD 4
INTRODUCTION 6
1 Scope 7
2 Normative references 7
3 Terms and definitions 8
4 Description of the test apparatus 10
4.1 Glow-wire 10
4.2 Electrical circuit of the glow-wire apparatus 11
4.3 Temperature measuring system 12
4.4 Specified layer 13
4.5 Test chamber 14
4.6 Timing device 14
5 Verification of the apparatus 15
5.1 Verification of the glow-wire tip 15
5.2 Verification of the temperature measuring system 15
6 Conditioning 15
7 Common test procedure 15
7.1 Test specimen support 15
7.2 Glow-wire temperature 16
7.3 Application of the glow-wire 16
8 General test observations and evaluations of test results 16
Annex A (normative) Requirements for "ignition" and "flaming" observations 17
A.1 General 17
A.2 Examples of ignition and non-ignition 17
Annex B (informative) Guidance on the verification procedure of the glow-wire temperature measuring system by the heating current 19
B.1 Objective 19
B.2 Preparation 19
B.3 Verification procedure 19
B.3.1 Observation and measurement 19
B.3.2 Correlation chart 19
B.3.3 Frequency of revising the correlation chart 20
Annex C (informative) Supplement – Times and durations, and examples of evaluations 21
C.1 Times and durations (in accordance with Clause 3) 21
C.2 Examples of evaluations 21
Bibliography 23

Figure 1 – Glow-wire and position of thermocouple 11
Figure 2 – Electrical circuit of the glow-wire apparatus 12
Figure 3 – Test apparatus examples 14
Figure A.1 – Example of a brightly shining flame 17
Figure A.2 – Example of a blue corona at the glow-wire tip 18
Figure A.3 – Example of ionized gases in the form of a tail near the glow wire tip 18

AVA Documents
Document Sharing Hub

Full document details: IEC 60695-2-10 2021

Figure B.1 – Correlation curve between the heating current and the glow-wire temperature (example) 20
Figure C.1 – Times and durations (Example: ignition occurs at 5 s and extinguishing occurs at 50 s) 21
Figure C.2 – Evaluation scheme with examples 22

Documents
Document Sharing Hub
Full document details: IEC 60695-2-10 2021

INTERNATIONAL ELECTROTECHNICAL COMMISSION

FIRE HAZARD TESTING –

Part 2-10: Glowing/hot-wire based test methods – Glow-wire apparatus and common test procedure

FOREWORD

1) The International Electrotechnical Commission (IEC) is a worldwide organization for standardization comprising all national electrotechnical committees (IEC National Committees). The object of IEC is to promote international co-operation on all questions concerning standardization in the electrical and electronic fields. To this end and in addition to other activities, IEC publishes International Standards, Technical Specifications, Technical Reports, Publicly Available Specifications (PAS) and Guides (hereafter referred to as "IEC Publication(s)"). Their preparation is entrusted to technical committees; any IEC National Committee interested in the subject dealt with may participate in this preparatory work. International, governmental and non-governmental organizations liaising with the IEC also participate in this preparation. IEC collaborates closely with the International Organization for Standardization (ISO) in accordance with conditions determined by agreement between the two organizations.
2) The formal decisions or agreements of IEC on technical matters express, as nearly as possible, an international consensus of opinion on the relevant subjects since each technical committee has representation from all interested IEC National Committees.
3) IEC Publications have the form of recommendations for international use and are accepted by IEC National Committees in that sense. While all reasonable efforts are made to ensure that the technical content of IEC Publications is accurate, IEC cannot be held responsible for the way in which they are used or for any misinterpretation by any end user.
4) In order to promote international uniformity, IEC National Committees undertake to apply IEC Publications transparently to the maximum extent possible in their national and regional publications. Any divergence between any IEC Publication and the corresponding national or regional publication shall be clearly indicated in the latter.
5) IEC itself does not provide any attestation of conformity. Independent certification bodies provide conformity assessment services and, in some areas, access to IEC marks of conformity. IEC is not responsible for any services carried out by independent certification bodies.
6) All users should ensure that they have the latest edition of this publication.
7) No liability shall attach to IEC or its directors, employees, servants or agents including individual experts and members of its technical committees and IEC National Committees for any personal injury, property damage or other damage of any nature whatsoever, whether direct or indirect, or for costs (including legal fees) and expenses arising out of the publication, use of, or reliance upon, this IEC Publication or any other IEC Publications.
8) Attention is drawn to the Normative references cited in this publication. Use of the referenced publications is indispensable for the correct application of this publication.
9) Attention is drawn to the possibility that some of the elements of this IEC Publication may be the subject of patent rights. IEC shall not be held responsible for identifying any or all such patent rights.

IEC 60695-2-10 has been prepared by IEC technical committee 89: Fire hazard testing. It is an International Standard.

This third edition cancels and replaces the second edition published in 2013. This edition constitutes a technical revision.

This edition includes the following significant technical changes with respect to the previous edition:

a) New terms and definitions with regards to times and durations have been added to Clause 3.
b) Previous Annex A of Equipment manufacturers and suppliers has been deleted.
c) Annex A (previous Annex B) for ignition and flaming observations has been changed from informative to normative.
d) New Annex C has been added, which visualizes times and durations, and gives examples for the behaviour of specimens, and how to evaluate them.

AVA Documents
Document Sharing Hub

Full document details: IEC 60695-2-10 2021

The text of this International Standard is based on the following documents:

FDIS	Report on voting
89/1535/FDIS	89/1547/RVD

Full information on the voting for its approval can be found in the report on voting indicated in the above table.

The language used for the development of this International Standard is English.

This document was drafted in accordance with ISO/IEC Directives, Part 2, and developed in accordance with ISO/IEC Directives, Part 1 and ISO/IEC Directives, IEC Supplement, available at www.iec.ch/members_experts/refdocs. The main document types developed by IEC are described in greater detail at www.iec.ch/standardsdev/publications.

It has the status of a basic safety publication in accordance with IEC Guide 104.

This standard is to be used in conjunction with IEC 60695-2-11, IEC 60695-2-12, and IEC 60695-2-13.

A list of all parts in the IEC 60695 series, published under the general title *Fire hazard testing*, can be found on the IEC website.

The committee has decided that the contents of this document will remain unchanged until the stability date indicated on the IEC website under webstore.iec.ch in the data related to the specific document. At this date, the document will be

- reconfirmed,
- withdrawn,
- replaced by a revised edition, or
- amended.

IMPORTANT – The 'colour inside' logo on the cover page of this publication indicates that it contains colours which are considered to be useful for the correct understanding of its contents. Users should therefore print this document using a colour printer.

Documents
Document Sharing Hub

Full document details: IEC 60695-2-10 2021

INTRODUCTION

In the design of any electrotechnical product, the risk of fire and the potential hazards associated with fire need to be considered. In this respect the objective of component, circuit, and product design, as well as the choice of materials, is to reduce to acceptable levels the potential risks of fire during normal operating conditions, reasonably foreseeable abnormal use, malfunction, and/or failure. IEC 60695-1-10 [1][1] was developed, together with its companion, IEC 60695-1-11 [2], to provide guidance on how this is to be accomplished.

The primary aims of IEC 60695-1-10 and IEC 60695-1-11 are to provide guidance on how:

a) to prevent ignition caused by an electrically energized component part; and

b) to confine any resulting fire within the bounds of the enclosure of the electrotechnical product in the event of ignition.

Secondary aims of these documents include the minimization of any flame spread beyond the product's enclosure and the minimization of harmful effects of fire effluents such as heat, smoke, toxicity and/or corrosivity.

Fires involving electrotechnical products can also be initiated from external non-electrical sources. Considerations of this nature should be dealt with in the overall fire risk assessment.

In electrotechnical equipment, overheated metal parts can act as ignition sources. In glow-wire tests, a glowing wire is used to simulate such an ignition source.

This part of IEC 60695 gives recommendations with regard to the glow-wire test apparatus and describes a common test procedure for tests applicable to end products and materials to be used with IEC 60695-2-11 which describes a glow-wire flammability test for end products (GWEPT), IEC 60695-2-12 which describes a glow-wire flammability index test for materials (GWFI), and IEC 60695-2-13 which describes a glow-wire ignition temperature test method for materials (GWIT).

[1] Numbers in square brackets refer to the Bibliography.

Documents
Document Sharing Hub

Full document details: IEC 60695-2-10 2021

FIRE HAZARD TESTING –

Part 2-10: Glowing/hot-wire based test methods – Glow-wire apparatus and common test procedure

1 Scope

This part of IEC 60695 specifies the glow-wire apparatus and common test procedure to simulate the effects of thermal stresses which may be produced by heat sources such as glowing elements or overloaded resistors, for short periods, in order to assess the fire hazard by a simulation technique.

The test procedure described in this document is a common test procedure intended for the small-scale tests in which a standardized electrically heated wire is used as a source of ignition.

It is a common part of the test procedures applied to end products and to solid electrical insulating materials or other solid combustible materials.

A detailed description of each particular test procedure is given in IEC 60695-2-11, IEC 60695-2-12 and IEC 60695-2-13.

This basic safety publication focusing on safety test method(s) is primarily intended for use by technical committees in the preparation of safety publications in accordance with the principles laid down in IEC Guide 104 and ISO/IEC Guide 51.

One of the responsibilities of a technical committee is, wherever applicable, to make use of basic safety publications in the preparation of its publications.

2 Normative references

The following documents are referred to in the text in such a way that some or all of their content constitutes requirements of this document. For dated references, only the edition cited applies. For undated references, the latest edition of the referenced document (including any amendments) applies.

IEC 60584-1, *Thermocouples – Part 1: EMF specifications and tolerances*

IEC 60695-2-11, *Fire hazard testing – Part 2-11: Glowing/hot-wire based test methods – Glow-wire flammability test method for end-products (GWEPT)*

IEC 60695-2-12, *Fire hazard testing – Part 2-12: Glowing/hot-wire based test methods – Glow-wire flammability index (GWFI) test method for materials*

IEC 60695-2-13, *Fire hazard testing – Part 2-13: Glowing/hot-wire based test methods – Glow-wire ignition temperature (GWIT) test method for materials*

ISO 4046-4:2016, *Paper, board, pulps and related terms – Vocabulary – Part 4: Paper and board grades and converted products*

ISO 13943:2017, *Fire safety – Vocabulary*

Documents
Document Sharing Hub

Full document details: IEC 60695-2-10 2021

3 Terms and definitions

For the purposes of this document, the terms and definitions given in ISO 13943:2017, some of which are reproduced below for the user's convenience, and the following apply.

ISO and IEC maintain terminological databases for use in standardization at the following addresses:

- IEC Electropedia: available at http://www.electropedia.org/
- ISO Online browsing platform: available at http://www.iso.org/obp

3.1
combustible, adjective
capable of being ignited and burned

[SOURCE: ISO 13943:2017, 3.52]

3.2
draught-free environment
space in which the results of experiments are not significantly affected by the local air speed

Note 1 to entry: A qualitative example is a space in which a wax candle flame remains essentially undisturbed. Quantitative examples are small-scale fire tests in which a maximum air speed of 0,1 $m \cdot s^{-1}$ or 0,2 $m \cdot s^{-1}$ is sometimes specified.

[SOURCE: ISO 13943:2017, 3.83]

3.3
fire hazard
potential for harm associated with fire

Note 1 to entry: Alternatively, fire hazard can be a physical object or condition with a potential for an undesirable consequence from fire.

[SOURCE: ISO 13943:2017, 3.131]

3.4
fire test
test that measures fire behaviour or exposes an item to the effects of a fire

Note 1 to entry: The results of a fire test can be used to quantify fire severity or determine the fire resistance or reaction to fire of the test specimen.

[SOURCE: ISO 13943:2017, 3.157]

3.5
flame, noun
rapid, self-sustaining, sub-sonic propagation of combustion in a gaseous medium, usually with emission of light

[SOURCE: ISO 13943:2017, 3.159]

3.6
flame event
sustained flaming and/or glowing combustion

Documents
Document Sharing Hub

Full document details: IEC 60695-2-10 2021

3.7
flammability
ability of a material or product to burn with a flame under specified conditions

[SOURCE: ISO 13943:2017, 3.178]

3.8
ignition
DEPRECATED: sustained ignition
<general> initiation of combustion

[SOURCE: ISO 13943:2017, 3.217]

3.9
test temperature
temperature to which the tip of the glow-wire is heated and stabilized prior to any contact with the test specimen

3.10
time of application
t_{APP}
application time of the glow-wire

Note 1 to entry: Time of application constitutes the first 30 s of the test.

Note 2 to entry: t_{APP} was originally designated as t_A in Editions 1 and 2 of IEC 60695-2.

Note 3 to entry: See Annex C.

3.11
time of observation
t_{OBS}
observation time of the specimen and/or specified layer, starting immediately after t_{APP}

Note 1 to entry: Time of observation constitutes the second 30 s of the test.

Note 2 to entry: See Annex C.

3.12
time of ignition
t_I
time (to the nearest 0,5 s), from the start of test, at which the longest persisting flame event starts

Note 1 to entry: This is a measured value.

Note 2 to entry: See Annex C.

3.13
time of extinguishing
t_E
time (to the nearest 0,5 s), from the start of the test, at which the longest persisting flame event ends

Note 1 to entry: This is a measured value.

Note 2 to entry: See Annex C.

Documents
Document Sharing Hub
Full document details: IEC 60695-2-10 2021

3.14
total flame event time
t_T
duration of the longest persisting flame event

$t_T = t_E - t_I$

Note 1 to entry: This is a calculated value.

Note 2 to entry: See Annex C.

3.15
flame time after removal
t_R
time elapsed after the removal of the glow-wire tip from the test specimen to the end of the longest persisting flame event

$t_R = t_E - 30$ s

Note 1 to entry: If t_E is less than 30 s then t_R is zero.

Note 2 to entry: This is a calculated value.

Note 3 to entry: See Annex C.

3.16
flame time during application
t_B
duration of the longest persisting flame event whilst the glow-wire tip is in contact with the test specimen

$t_B = t_T - t_R$

Note 1 to entry: This is a calculated value.

Note 2 to entry: See Annex C.

4 Description of the test apparatus

4.1 Glow-wire

The glow-wire is formed from nickel/chromium (> 77 % Ni/20 ± 1 % Cr) wire, having an overall diameter of 4,00 mm ± 0,07 mm (before bending). The dimensions of the glow-wire loop are as detailed in Figure 1. When forming the glow-wire, ensure that fine cracking at the tip is avoided.

NOTE Annealing is a suitable process for prevention of fine cracking at the tip.

Documents
Document Sharing Hub
Full document details: IEC 60695-2-10 2021

Dimensions in millimetres

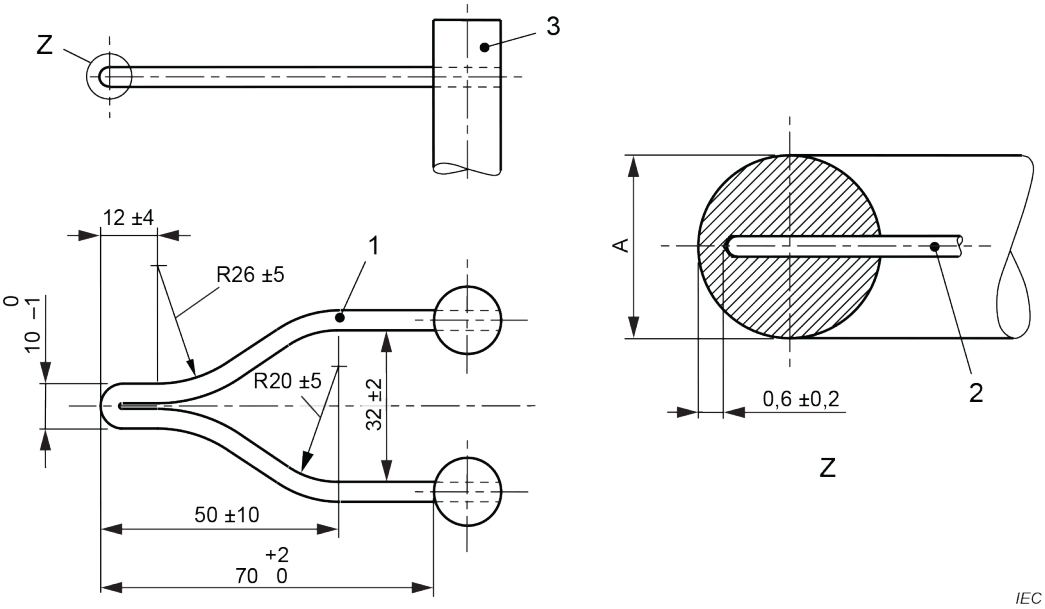

Key

1 Glow-wire

2 Thermocouple

3 Stud

Dimension A (after bending): see 5.1.

Figure 1 – Glow-wire and position of thermocouple

A new glow-wire shall be annealed for a total of at least 10 h by being subjected to a current of at least 120 A before being used for a test run. The total annealing time may be achieved cumulatively. To avoid damage, the thermocouple shall not be installed during annealing. At the end of annealing, the depth of the thermocouple pocket hole shall be verified.

NOTE 1 The temperature of a new glow-wire which has not been annealed gradually lowers during the first few hours when subjected to a flow of current. After a period of time the temperature then reaches equilibrium.

The test apparatus shall be designed so that the glow-wire is kept in a horizontal plane and applies a force of 0,95 N ± 0,10 N to the test specimen during the application of the glow-wire. The force shall be maintained at this value when the glow-wire or the test specimen is moved horizontally one towards the other. The penetration of the tip of the glow-wire into and through the test specimen shall be limited to 7 mm ± 0,5 mm.

The test apparatus shall be designed in such a way that burning or glowing particles falling from the test specimen are able to fall without obstruction onto the layer as specified in 4.4.

Two typical examples of the test apparatus are shown in Figure 3a) and Figure 3b).

NOTE 2 The apparatus shown in Figure 3b) has been found useful when testing heavy and/or awkwardly shaped test specimens.

4.2 Electrical circuit of the glow-wire apparatus

The glow-wire shall be heated by an electric circuit as shown in Figure 2. There shall be no feedback mechanism or circuit to maintain the temperature. The input voltage supplying the glow-wire test apparatus shall be stable (±2 %) during the test.

NOTE 1 The stable voltage can be supplied using an appropriate stabilized voltage source. As an alternative, it has been found useful to monitor the input voltage supplied to the glow-wire test apparatus during the test.

AVA Documents Document Sharing Hub

Full document details: IEC 60695-2-10 2021

The circuit shall contain a current measuring device which indicates a true RMS value having an accuracy of ±2,5 % or more accurate.

Due to the high currents involved, it is essential that all electrical connections for the glow-wire are capable of carrying the current without affecting the performance or long-term stability of the circuit. For the glow-wire to stud connection, a sufficient contact area (typically at least 60 mm^2 at each end) is necessary for the stable and loss-less current necessary for the test. The glow-wire to stud connection shall be tightly screwed, soldered, or brazed between the glow-wire and studs.

NOTE 2 The typical current necessary for heating the tip to a temperature of 960 °C is between 120 A and 150 A.

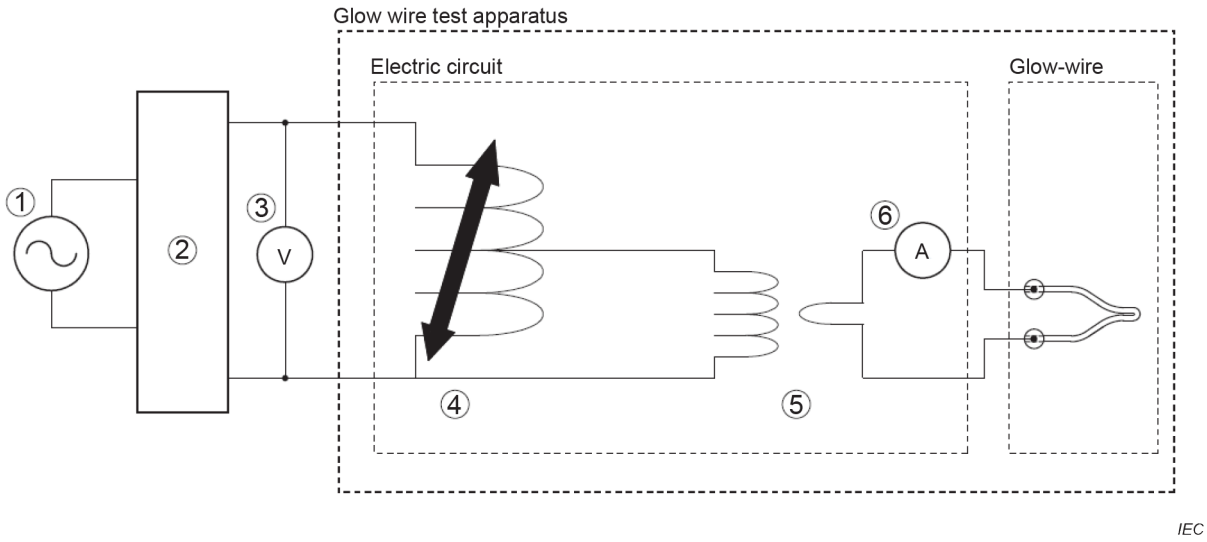

Key

1 Mains input voltage supply

2 Stabilized voltage source (alternative to Key 3)

3 Input voltage measuring device (alternative to Key 2)

4 Variable auto-transformer

5 Step down separating transformer

6 Current measuring device

Figure 2 – Electrical circuit of the glow-wire apparatus

4.3 Temperature measuring system

The temperature of the tip of the glow-wire shall be measured by a class 1 (see IEC 60584-1) mineral-insulated metal-sheathed fine-wire thermocouple with an insulated junction. It shall have an overall nominal diameter of 1,0 mm. The thermocouple wires shall be suitable for continuous operation at temperatures up to 960 °C (e.g. chromel/alumel (Type K) or NiCrSi/NiSi (Type N) – see IEC 60584-1). The welded point shall be located inside the sheath as close to the tip as practicable. The sheath shall consist of a metal resistant to continuous operation at a temperature of at least 1 050 °C.

NOTE A sheath made from a nickel-based heat-resistant alloy satisfies the above requirements.

The glow-wire, with the thermocouple inserted, is shown in Figure 1, Detail Z.

Documents
Document Sharing Hub
Full document details: IEC 60695-2-10 2021

The thermocouple is arranged in a pocket hole, drilled in behind the tip of the glow-wire, and maintained as a close fit as shown in Detail Z of Figure 1. The pocket hole shall be the smallest diameter that can accommodate the inserted thermocouple in order to reduce the occurrence of contamination during testing. The thermal contact between the tip of the thermocouple and the end of the drilled hole shall be maintained. Ensure that the thermocouple is able to follow the dimensional changes of the tip of the glow-wire caused by heating.

The instrument for measuring the thermocouple voltages may consist of any commercial digital thermometer with a built-in reference junction.

4.4 Specified layer

To evaluate the possible spread of fire, for example by burning or glowing particles falling from the test specimen, a specified layer is placed underneath the test specimen.

Unless otherwise specified, a single layer of wrapping tissue resting on, and in close contact with the upper surface of a piece of wooden board (flat and smooth and having a minimum thickness of 10 mm) is positioned at a distance of 200 mm ± 5 mm below the place where the glow-wire is applied to the test specimen. See Figure 3a) and Figure 3b). Wrapping tissue (as defined in ISO 4046-4:2016, 4.215) is a soft and strong lightweight wrapping paper with a mass per unit area of between 12 g/m^2 and 30 g/m^2.

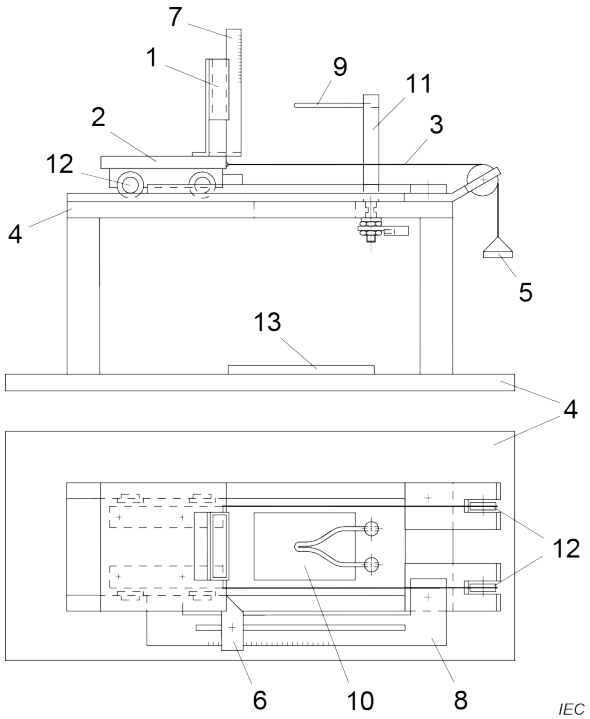

Key

1 Test specimen support
2 Carriage
3 Tensioning cord
4 Base plate
5 Weight
6 Adjustable stop
7 Scale to measure height of flame
8 Penetration adjustment
9 Glow-wire
10 Cut-out in base plate for falling particles
11 Glow-wire mounting stud
12 Low-friction rollers
13 Specified layer

3a) Test apparatus – static glow-wire, moving test specimen (example)

Documents
Document Sharing Hub
Full document details: IEC 60695-2-10 2021