IEC 60704-2-13

Edition 4.0 2023-10

INTERNATIONAL STANDARD

NORME INTERNATIONALE

Household and similar electrical appliances – Test code for the determination of airborne acoustical noise –
Part 2-13: Particular requirements for cooking fume extractors

Appareils électrodomestiques et analogues – Code d'essai pour la détermination du bruit aérien –
Partie 2-13: Exigences particulières pour extracteurs de fumée

IEC 60704-2-13:2023-10(en-fr)

Documents
Document Sharing Hub

Full document details: IEC 60704-2-13-2023

THIS PUBLICATION IS COPYRIGHT PROTECTED
Copyright © 2023 IEC, Geneva, Switzerland

All rights reserved. Unless otherwise specified, no part of this publication may be reproduced or utilized in any form or by any means, electronic or mechanical, including photocopying and microfilm, without permission in writing from either IEC or IEC's member National Committee in the country of the requester. If you have any questions about IEC copyright or have an enquiry about obtaining additional rights to this publication, please contact the address below or your local IEC member National Committee for further information.

Droits de reproduction réservés. Sauf indication contraire, aucune partie de cette publication ne peut être reproduite ni utilisée sous quelque forme que ce soit et par aucun procédé, électronique ou mécanique, y compris la photocopie et les microfilms, sans l'accord écrit de l'IEC ou du Comité national de l'IEC du pays du demandeur. Si vous avez des questions sur le copyright de l'IEC ou si vous désirez obtenir des droits supplémentaires sur cette publication, utilisez les coordonnées ci-après ou contactez le Comité national de l'IEC de votre pays de résidence.

IEC Secretariat
3, rue de Varembé
CH-1211 Geneva 20
Switzerland

Tel.: +41 22 919 02 11
info@iec.ch
www.iec.ch

About the IEC
The International Electrotechnical Commission (IEC) is the leading global organization that prepares and publishes International Standards for all electrical, electronic and related technologies.

About IEC publications
The technical content of IEC publications is kept under constant review by the IEC. Please make sure that you have the latest edition, a corrigendum or an amendment might have been published.

IEC publications search - webstore.iec.ch/advsearchform
The advanced search enables to find IEC publications by a variety of criteria (reference number, text, technical committee, …). It also gives information on projects, replaced and withdrawn publications.

IEC Just Published - webstore.iec.ch/justpublished
Stay up to date on all new IEC publications. Just Published details all new publications released. Available online and once a month by email.

IEC Customer Service Centre - webstore.iec.ch/csc
If you wish to give us your feedback on this publication or need further assistance, please contact the Customer Service Centre: sales@iec.ch.

IEC Products & Services Portal - products.iec.ch
Discover our powerful search engine and read freely all the publications previews. With a subscription you will always have access to up to date content tailored to your needs.

Electropedia - www.electropedia.org
The world's leading online dictionary on electrotechnology, containing more than 22 300 terminological entries in English and French, with equivalent terms in 19 additional languages. Also known as the International Electrotechnical Vocabulary (IEV) online.

A propos de l'IEC
La Commission Electrotechnique Internationale (IEC) est la première organisation mondiale qui élabore et publie des Normes internationales pour tout ce qui a trait à l'électricité, à l'électronique et aux technologies apparentées.

A propos des publications IEC
Le contenu technique des publications IEC est constamment revu. Veuillez vous assurer que vous possédez l'édition la plus récente, un corrigendum ou amendement peut avoir été publié.

Recherche de publications IEC - webstore.iec.ch/advsearchform
La recherche avancée permet de trouver des publications IEC en utilisant différents critères (numéro de référence, texte, comité d'études, …). Elle donne aussi des informations sur les projets et les publications remplacées ou retirées.

IEC Just Published - webstore.iec.ch/justpublished
Restez informé sur les nouvelles publications IEC. Just Published détaille les nouvelles publications parues. Disponible en ligne et une fois par mois par email.

Service Clients - webstore.iec.ch/csc
Si vous désirez nous donner des commentaires sur cette publication ou si vous avez des questions contactez-nous: sales@iec.ch.

IEC Products & Services Portal - products.iec.ch
Découvrez notre puissant moteur de recherche et consultez gratuitement tous les aperçus des publications. Avec un abonnement, vous aurez toujours accès à un contenu à jour adapté à vos besoins.

Electropedia - www.electropedia.org
Le premier dictionnaire d'électrotechnologie en ligne au monde, avec plus de 22 300 articles terminologiques en anglais et en français, ainsi que les termes équivalents dans 19 langues additionnelles. Egalement appelé Vocabulaire Electrotechnique International (IEV) en ligne.

AVA Documents
Document Sharing Hub

Full document details: IEC 60704-2-13-2023

IEC 60704-2-13

Edition 4.0 2023-10

INTERNATIONAL STANDARD

NORME INTERNATIONALE

Household and similar electrical appliances – Test code for the determination of airborne acoustical noise – Part 2-13: Particular requirements for cooking fume extractors

Appareils électrodomestiques et analogues – Code d'essai pour la détermination du bruit aérien – Partie 2-13: Exigences particulières pour extracteurs de fumée

INTERNATIONAL
ELECTROTECHNICAL
COMMISSION

COMMISSION
ELECTROTECHNIQUE
INTERNATIONALE

ICS 17.140.20, 97.040.20

ISBN 978-2-8322-7577-1

Warning! Make sure that you obtained this publication from an authorized distributor.
Attention! Veuillez vous assurer que vous avez obtenu cette publication via un distributeur agréé.

® Registered trademark of the International Electrotechnical Commission
Marque déposée de la Commission Electrotechnique Internationale

Documents
Document Sharing Hub

Full document details: IEC 60704-2-13-2023

CONTENTS

FOREWORD 3
INTRODUCTION 5
1 Scope 6
2 Normative references 6
3 Terms and definitions 6
4 Measurement methods and acoustical environments 8
5 Instrumentation 9
6 Operation and location of appliances under test 10
7 Measurement of sound power levels 17
8 Calculation of sound pressure and sound power levels 18
9 Information to be recorded 18
10 Information to be reported 18
Annexes 19
Annex A (normative) 19

Figure 101 – Standard load for CFEs 11
Figure 102 – Standard load for CFEs with an external fan 13
Figure 103 – Test enclosure for down-draft systems 14
Figure 104 – Test enclosure for built-in appliances 16
Figure 105 – Example of standard stand 16

Table 1 – Standard deviations of sound power levels 9
Table 2 – Standard deviations for declaration and verification 9
Table 103 – Diameter of the standard load for CFEs 12

Documents
Document Sharing Hub
Full document details: IEC 60704-2-13-2023

INTERNATIONAL ELECTROTECHNICAL COMMISSION

HOUSEHOLD AND SIMILAR ELECTRICAL APPLIANCES – TEST CODE FOR THE DETERMINATION OF AIRBORNE ACOUSTICAL NOISE –

Part 2-13: Particular requirements for cooking fume extractors

FOREWORD

1) The International Electrotechnical Commission (IEC) is a worldwide organization for standardization comprising all national electrotechnical committees (IEC National Committees). The object of IEC is to promote international co-operation on all questions concerning standardization in the electrical and electronic fields. To this end and in addition to other activities, IEC publishes International Standards, Technical Specifications, Technical Reports, Publicly Available Specifications (PAS) and Guides (hereafter referred to as "IEC Publication(s)"). Their preparation is entrusted to technical committees; any IEC National Committee interested in the subject dealt with may participate in this preparatory work. International, governmental and non-governmental organizations liaising with the IEC also participate in this preparation. IEC collaborates closely with the International Organization for Standardization (ISO) in accordance with conditions determined by agreement between the two organizations.
2) The formal decisions or agreements of IEC on technical matters express, as nearly as possible, an international consensus of opinion on the relevant subjects since each technical committee has representation from all interested IEC National Committees.
3) IEC Publications have the form of recommendations for international use and are accepted by IEC National Committees in that sense. While all reasonable efforts are made to ensure that the technical content of IEC Publications is accurate, IEC cannot be held responsible for the way in which they are used or for any misinterpretation by any end user.
4) In order to promote international uniformity, IEC National Committees undertake to apply IEC Publications transparently to the maximum extent possible in their national and regional publications. Any divergence between any IEC Publication and the corresponding national or regional publication shall be clearly indicated in the latter.
5) IEC itself does not provide any attestation of conformity. Independent certification bodies provide conformity assessment services and, in some areas, access to IEC marks of conformity. IEC is not responsible for any services carried out by independent certification bodies.
6) All users should ensure that they have the latest edition of this publication.
7) No liability shall attach to IEC or its directors, employees, servants or agents including individual experts and members of its technical committees and IEC National Committees for any personal injury, property damage or other damage of any nature whatsoever, whether direct or indirect, or for costs (including legal fees) and expenses arising out of the publication, use of, or reliance upon, this IEC Publication or any other IEC Publications.
8) Attention is drawn to the Normative references cited in this publication. Use of the referenced publications is indispensable for the correct application of this publication.
9) IEC draws attention to the possibility that the implementation of this document may involve the use of (a) patent(s). IEC takes no position concerning the evidence, validity or applicability of any claimed patent rights in respect thereof. As of the date of publication of this document, IEC had not received notice of (a) patent(s), which may be required to implement this document. However, implementers are cautioned that this may not represent the latest information, which may be obtained from the patent database available at https://patents.iec.ch. IEC shall not be held responsible for identifying any or all such patent rights.

IEC 60704-2-13 has been prepared by subcommittee 59K: Performance of household and similar electrical cooking appliances, of IEC technical committee 59: Performance of household and similar electrical appliances. It is an International Standard.

This fourth edition cancels and replaces the third edition published in 2016. This edition constitutes a technical revision.

This edition includes the following significant technical changes with respect to the previous edition:

a) alignment with IEC 61591:2023;
b) change of title, scope and definitions 3.103 and 3.104: this document deals with cooking fume extractors (this covers range hoods and down-draft systems);

AVA Documents Document Sharing Hub

c) exhaust pipe of down-draft systems specified;

d) built-in range hoods in recirculation mode with an air outlet device specified;

e) alignment with IEC 60704-1:2021.

The text of this International Standard is based on the following documents:

Draft	Report on voting
59K/376/FDIS	59K/380/RVD

Full information on the voting for its approval can be found in the report on voting indicated in the above table.

The language used for the development of this International Standard is English.

This document was drafted in accordance with ISO/IEC Directives, Part 2, and developed in accordance with ISO/IEC Directives, Part 1 and ISO/IEC Directives, IEC Supplement, available at www.iec.ch/members_experts/refdocs. The main document types developed by IEC are described in greater detail at www.iec.ch/publications.

This International Standard is to be used in conjunction with IEC 60704-1:2021.

This document supplements or modifies the corresponding clauses in IEC 60704-1:2021, so as to establish the test code for cooking fume extractors. When a particular subclause of IEC 60704-1:2021 is not mentioned in this document, that subclause is applicable as far as reasonable. Where this standard states "addition", "modification" or "replacement", the relevant requirements, test specifications or explanatory matter in IEC 60704-1:2021 are to be adapted accordingly.

Subclauses, tables and figures that are numbered starting from 101 are additional to those in IEC 60704-1:2021. Additional annexes are lettered AA, BB, etc.

Unless notes are in a new subclause or involve notes in IEC 60704-1:2021, they are numbered starting from 101, including those in a replaced clause or subclause.

A list of all parts in the IEC 60704 series, published under the general title *Household and similar electrical appliances – Test code for the determination of airborne acoustical noise*, can be found on the IEC website.

In this standard, the following print types are used:

- terms defined in Clause 3: **bold type**.

The committee has decided that the contents of this document will remain unchanged until the stability date indicated on the IEC website under webstore.iec.ch in the data related to the specific document. At this date, the document will be

- reconfirmed,
- withdrawn, or
- revised.

Documents
Document Sharing Hub

Full document details: IEC 60704-2-13-2023

INTRODUCTION

The measuring conditions specified in this document provide for sufficient accuracy in determining the noise emitted and comparing the results of measurements taken by different laboratories, whilst simulating as far as possible the practical use of cooking fume extractors mounted in household kitchens.

It is recommended to consider the determination of noise levels as part of a comprehensive testing procedure covering many aspects of the properties and performance of cooking fume extractors.

NOTE As stated in the introduction to IEC 60704-1:2021, this test code is concerned with airborne noise only.

Documents
Document Sharing Hub

Full document details: IEC 60704-2-13-2023

HOUSEHOLD AND SIMILAR ELECTRICAL APPLIANCES – TEST CODE FOR THE DETERMINATION OF AIRBORNE ACOUSTICAL NOISE –

Part 2-13: Particular requirements for cooking fume extractors

1 Scope

Addition:

These particular requirements apply to **cooking fume extractors** for household and similar use intended for filtering the air of a room or for exhausting the air out of a room, including their accessories and their component parts. It also applies to **cooking fume extractors** where the fan is mounted separately from the appliance inside or outside of the room where the appliance is located, but controlled by the appliance when the fan is defined in the technical documentation. This document deals also with **down-draft systems** that are arranged beside, behind or under the cooking appliance.

Measurements carried out in accordance with this document determine the noise emission into the room, from which cooking fumes are extracted. Noise emission to the outside (e.g. through air ducts) are not considered.

2 Normative references

Addition:

IEC 60704-1:2021, *Household and similar electrical appliances – Test code for the determination of airborne acoustical noise – Part 1: General requirements*

IEC 61591:2023, *Cooking fume extractors – Methods for measuring performance*

ISO 7235:2003, *Acoustics – Laboratory measurement procedures for ducted silencers and air-terminal units – Insertion loss, flow noise and total pressure loss*

3 Terms and definitions

Addition:

3.101
cooking fume extractor
CFE
appliance with fan and filter intended to collect and treat cooking fumes, which can be operated in **recirculation mode** or **extraction mode**

[SOURCE: IEC 61591:2023, 3.2]

3.102
range hood
CFE installed over a cooking appliance

[SOURCE: IEC 61591:2023, 3.3]

Documents
Document Sharing Hub

Full document details: IEC 60704-2-13-2023

3.103
wall range hood
range hood mounted to the wall

[SOURCE: IEC 61591:2023, 3.3.1]

3.104
island range hood
range hood mounted to the ceiling

[SOURCE: IEC 61591:2023, 3.3.2]

3.105
ceiling range hood
range hood integrated onto or into the ceiling

[SOURCE: IEC 61591:2023, 3.3.3]

3.106
built-in range hood
range hood mounted into or onto a cabinet

[SOURCE: IEC 61591:2023, 3.3.4]

3.107
microwave hood combination
CFE integrated in a microwave oven

[SOURCE: IEC 61591:2023, 3.4]

3.108
multiple combination hood
CFE where the fan is mounted separately of the appliance, but controlled by the appliance

[SOURCE: IEC 61591:2023, 3.5]

3.109
down-draft system
CFE intended for installation adjacent to a cooking appliance or integrated in a cooking appliance that draws vapour down into a duct

Note 1 to entry: A **down-draft system** can also be a system where the fan is mounted separately from the appliance but controlled by the appliance.

[SOURCE: IEC 61591:2023, 3.6]

3.110
recirculation mode
mode of a **CFE** that discharges air back into the room, which includes an **odour-reduction filter**

[SOURCE: IEC 61591:2023, 3.7]

Documents
Document Sharing Hub

Full document details: IEC 60704-2-13-2023

3.111
extraction mode
mode of a **CFE** that discharges the air to the outside of the building by means of ducting

Note 1 to entry: **Extraction mode** is also known as "vented mode" or "ducted mode".

[SOURCE: IEC 61591:2023, 3.8]

3.112
rated voltage
voltage assigned to the **CFE** by the manufacturer

[SOURCE: IEC 61591:2023, 3.9]

3.113
grease filter
components for absorbing grease, which are intended to be replaced or removed for cleaning without tools

[SOURCE: IEC 61591:2023, 3.11]

3.114
odour-reduction filter
components for reducing odour

[SOURCE: IEC 61591:2023, 3.12]

3.115
highest continuous setting for normal use
control setting of **CFE** at highest speed, excluding the **boost position setting**

Note 1 to entry: Marked setting on the appliance, which is described in the instructions for use.

[SOURCE: IEC 61591:2023, 3.15]

3.116
boost position setting
marked control setting at maximum fan speed, which is automatically limited in duration

Note 1 to entry: Marked setting on the appliance, which is described in the instructions for use.

[SOURCE: IEC 61591:2023, 3.16]

4 Measurement methods and acoustical environments

4.2 Direct method

Addition:

If pure tone components are present in the noise emitted by the source, the estimated standard deviation of the measured sound pressure levels in the special reverberation room can increase. In such cases, additional microphone positions or source positions can be necessary, as specified in ISO 3743-2:2018.

Documents
Document Sharing Hub
Full document details: IEC 60704-2-13-2023

4.3 Comparison method

Addition:

If pure tone components are present in the noise emitted by the source, the estimated standard deviation of the measured sound pressure levels in the hard-walled test room or in the special reverberation room can increase. In such cases, additional microphone positions or source positions can be necessary, as specified in ISO 3743-1:2010 or ISO 3743-2:2018.

4.5 Measurement uncertainties

4.5.2 Standard deviations on repeatability and reproducibility and standard deviations related to declaration and verification

Replacement:

The estimated values of standard deviations of sound power levels determined in accordance with this document are given in Table 1:

Table 1 – Standard deviations of sound power levels

Standard deviation (dB)	
σ_r (repeatability)	σ_R (reproducibility)
0,4	1,0

For the purpose of determining and verifying noise emission values in accordance with IEC 60704-3, the values in Table 2 apply:

Table 2 – Standard deviations for declaration and verification

Standard deviation (dB)		
σ_P (production)	σ_t (total)	σ_M (reference)
1,5 to 1,7	1,8 to 2,0	2,0

5 Instrumentation

5.1 Instrumentation for measuring acoustical data

Addition:

The use of a windscreen is recommended. If necessary, the observed sound pressure level shall be corrected for changes in the microphone's sensitivity, in accordance with the instructions accompanying the instrumentation.

Documents
Document Sharing Hub
Full document details: IEC 60704-2-13-2023

6 Operation and location of appliances under test

6.1 Equipping and pre-conditioning of appliances

6.1.1

Addition:

CFEs shall be fitted with (a) clean filter(s).

NOTE The filter(s) have to be replaced after a grease absorption test, while an odour-reduction test does not soil the filter(s).

CFEs in **extraction mode** shall be fitted with the pipe coupling ring, if any, having the largest diameter among those provided by the manufacturer.

Any pull-out or swing-out mechanism that can be opened to a position for normal use in accordance with the manufacturer's instructions shall be opened during the test. Positions that are for cleaning and maintenance purposes only shall be not considered. If the manufacturer's instruction does not state any information, the pull-out or swing-out mechanism shall be completely closed.

If the **down-draft system** can be elevated, the manufacturer's instructions are followed; otherwise, it shall be measured in its maximum elevated position for use.

6.1.3

Replacement:

Prior to noise measurements, the **CFE** shall be operated for at least 4 h at the **highest continuous setting for normal use** (see 3.115).

6.1.4

Replacement:

Immediately before each series of noise measurements, the **CFE** equipped for its intended use is operated to stabilize at the **highest continuous setting for normal use** (see 3.115) for at least 10 min.

6.2 Supply of electrical energy and of water or gas

6.2.3 and **6.2.4** Not applicable.

6.4 Loading and operating of appliances during tests

6.4.1

Replacement:

This document describes the determination of the noise emission of household **CFE**s and can be applied for the measurement at all fan speed settings, including on a boost position, if any. The noise shall be reported at least for the **highest continuous setting for normal use**.

6.4.2

Replacement:

The **CFE** shall be equipped in accordance with 6.1.1.

Documents
Document Sharing Hub

Full document details: IEC 60704-2-13-2023

CFEs in **extraction mode** shall be loaded using a pipe connected to a muffler, in accordance with Figure 101. The pipe shall be rigid with smooth inner walls and shall have a diameter according to Table 103. The muffler shall have an insertion loss as specified in the table of Figure 101. It shall have a circular section with the same internal diameter as that of the pipe, a length as specified in Figure 101 and shall not have parts protruding inside that can cause additional pressure drops. The pipe and the muffler shall also comply with all the specifications shown in Figure 101 and care shall be taken that they do not radiate noise.

Dimensions in millimetres

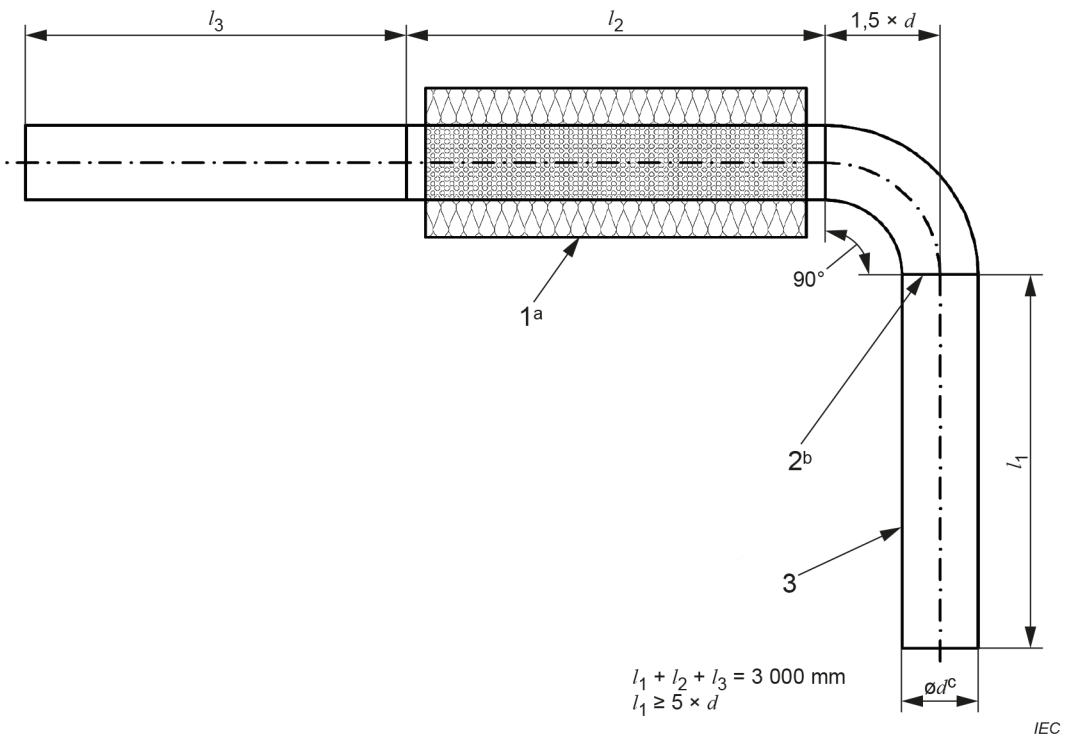

Minimum insertion loss in decibels for octave bands						
125 Hz	250 Hz	500 Hz	1 kHz	2 kHz	4 kHz	8 kHz
8	20	20	20	20	20	20
NOTE Insertion loss measured in accordance with ISO 7235:2003						

Key:

1 muffler

2 connections

3 pipe with smooth inner walls

[a] The muffler shall have the same internal diameter as that of the pipe and shall have at least the insertion loss reported in the table.

[b] The connections shall not interfere with the air flow to avoid any additionnal noise or pressure drop.

[c] For the measurement of the diameter d see 6.4.2

Figure 101 – Standard load for CFEs

Documents
Document Sharing Hub
Full document details: IEC 60704-2-13-2023

Table 103 – Diameter of the standard load for CFEs

Measured inner diameter d_{CFE} of the air-outlet of the cooking fume extractor in mm	Diameter category	Inner diameter d of the standard load in mm
$d_{CFE} \leq 110$	100	100 ± 2
$110 < d_{CFE} \leq 135$	125	125 ± 3
$135 < d_{CFE} \leq 175$	150	150 ± 5
$175 < d_{CFE} \leq 225$	200	200 ± 8
$d_{CFE} > 225$	250	250 ± 10
NOTE This table is based on IEC 61591:2023, Table 3.		

For a **CFE** in **extraction mode** intended to be connected to an exhaust pipe with a rectangular cross-section, a round exhaust pipe shall be used. The diameter category of the standard load shall be in accordance with Table 103 according to the inner diameter of an adapter or a recommendation given by the manufacturer. If no adapter is provided and no recommendation is given, a diameter d_{CFE} shall be calculated corresponding to the cross-section of the outlet of the appliance.

To connect the standard load to the rectangular air-outlet, an additional adapter pipe element shall be used. This adapter element shall not cause an additional pressure drop and shall not radiate additional noise. The length of this adapter element is not considered as a part of the total length $l_1 + l_2 + l_3$ of the standard load.

A **CFE** with an external fan shall be connected to the fan with a pipe and a muffler in accordance with Figure 102. The pipe shall be rigid with smooth inner walls and shall have the widest diameter among those specified by the manufacturer. If not stated, a standard pipe with the best fitting diameter shall be used, in accordance with Table 103. The muffler shall be the preferred one according to the manufacturer's instructions. If the manufacturer does not recommend a certain type of muffler, the **CFE** is tested without a muffler. The total length of the pipe shall be in accordance with the value stated in Figure 102.

Documents
Document Sharing Hub
Full document details: IEC 60704-2-13-2023